CONTRACT DOCUMENTS

TOWN OF ROCHESTER

CHSGOD Infrastructure Improvements

Contract ID: 22MWIPROCHESTERCROSS

Prepared For:

Town of Rochester

Town Hall
1 Constitution Way
Rochester, MA 02770

Town Hall Annex
37 Marion Road
Rochester, MA 02770

Issued for Bid

April 1, 2024

ALLEN & MAJOR ASSOCIATES, INC.

10 Main Street
Lakeville, MA 02347
Tel: (508) 923-1010
Fax: (508) 923-6309

civil engineers ◆ land surveyors ◆ environmental consultants ◆ landscape architects

TABLE OF CONTENTS

DIVISION 0

Section	Title	Page
000200	Invitation to Bid	000200-1
00030	Advertisement to Bid	00030 -1
00410	Bid Form and Qualifications	00410 -1
00500	Notice of Award	00500 -1
00510	Standard Agreement	00510 -1
00610	Performance Bond	00610 -1
00620	Payment Bond	00620 -1
00700	Standard General Conditions of the Construction Contract	00700 -1
00800	Supplementary Conditions of the Construction Contract	00800 -1

DIVISION 1

Section	Title	Page
01010	Summary of the Work	01010 -1
01024	Measurement and Payment	01024 -1

DIVISION 2

Section	Title	Page
024000	Demolition	024000 -1

DIVISION 3

Section	Title	Page
033053	Miscellaneous Cast-In-Place Concrete	033053 -1

DIVISION 10

Section	Title	Page
101453	Signage	101453 -1

DIVISION 31

Section	Title	Page
310110	Site Preparation	310110 -1
311000	Site Clearing	311000 -1
312000	Earth Moving	312000 -1
312313	Excavation, Backfill & Compaction for Pavement	312313 -1
312316.13	Excavation, Backfill & Compaction for Utilities	312316.13 -1
312316.16	Excavation, Backfill & Compaction for Structures	312316.16 -1
312316.26	Rock and Boulder Removal	312316.26 -1
313200	Soil Stabilization	313200 -1
315000	Excavation Support and Protection	315000 -1

DIVISION 32

Section	Title	Page
321216	Asphalt Paving	321216 -1
321313	Concrete Paving	321313 -1
321600	Curbs, Sidewalks, Island and Ramps	321600 -1
321723	Pavement Markings	321723 -1
322226	Asphalt Base Course	322226 -1
329219	Seeding	329219 -1

DIVISION 33

Section	Title	Page
331113	Watering Distribution Systems	331113 -1
331113.13	Ductile Iron Fittings	331113.13 -1
334000	Storm Drainage Systems	334000 -1

APPENDICES

Appendix	Title
A	State Wage Rates
B	Mass DOT Access Permit
C	Wareham Fire District Rules & Regulations
D	Price Adjustment Clauses
E	Mass DOT Division II – Construction Details
F	Diesel Retrofit Program
G	MGL Chapter 30 Law Sections

SECTION 00 02 00

INVITATION TO BID

1.0 GENERAL

1.1 Invitation to Bid for installation of water infrastructure and associated road work within the MassDOT State Highway Layout and on County Roadway, a local street in the Town of Rochester, MA. The work scope is the installation of concrete lined ductile iron water distribution piping in accordance with the requirements and specifications of the Wareham Fire District and construct curbing, sidewalk, and hot mix asphalt (HMA) improvements in accordance with MassDOT construction specifications and permit authorization for work 5-2020-0529. The summary of work is further outlined in Section 01010. Procurement procedures as defined by MGL c.30 §39M or MGL c.30B §5 shall be the governing process if the information contained within this Invitation to Bid is found to be in conflict with the MGL process.

A. Proposals shall be submitted in triplicate with required bonds and security.

B. Owner's representative will receive sealed proposals until 1:00 PM, EST on May 1, 2024. Proposals should be issued to the Town of Rochester Procurement Officer & Town Administrator, c/o Town Planner, Nancy Durfee, Town Hall Annex, 37 Marion Road, Rochester, MA, 02770. NDurfee@Townof Rochester.com.

C. Each Bidder shall accompany their proposal with a bid guarantee in the form of a Cashier's Check, a Certified Check, or a Bid Bond secured by a guarantee company or surety company licensed to operate in the Commonwealth of Massachusetts in the amount of 5% of the bid.

1. This bid guarantee shall insure the execution of a Contract, and the furnishing of a 50% Payment Bond which shall be in effect for 30 days after Owner's receipt of bid.

2. Such security of general bidders will be returned to all except the three lowest responsible and eligible bidders within five days, Saturdays, Sundays, and legal holidays excluded, after the opening of bids, and the remaining securities will be returned promptly after the Owner and the accepted bidder have executed the Contract, or if no notice of intent to award has been presented to the selected contractor within 30 days, Saturdays, Sundays and holidays excluded, after the date of the opening of bids, upon demand of the bidder at any time thereafter.

3. The Bid shall be accompanied by the following certification statement: "The undersigned certifies under penalties of perjury

collusion or fraud with any other person." As used in this paragraph the word "person" shall mean any natural person, joint venture, partnership, corporation or other business or legal entity.

D. Any questions regarding this Invitation to Bid or the Contract Documents shall be directed in writing to the office of the Owner.

E. Bidders may not withdraw their Bids for a period of thirty days, excluding Saturdays, Sundays, and legal holidays after the actual date of the opening of the Bids.

F. Owner reserves the right to reject any or all bids and to waive technicalities and informalities should the owner deem it in the public interest to do so. The Owner may also reject bids which in its sole judgment are either incomplete, conditional, obscure, or not responsive or which contain additions not called for, erasures not properly initialed, alterations, or similar irregularities.

G. AutoCAD Files for bidding purposes are available upon written request from the design engineer. Contact Philip Cordeiro, PE at Allen & Major Associates, Inc. (508) 923-1010 or email at pcordeiro@allenmajor.com.

H. A non-mandatory pre-bid meeting will be held at the project site on Friday, April 5, 2024 at 10:00 a.m. All interested bidders are encouraged to attend.

I. RULE FOR AWARD: The contract will be awarded to the lowest responsible and eligible bidder possessing at least 5 years of relevant experience. The lowest responsible and responsive contractor/firm must possess the skill, ability, and integrity necessary for the faithful performance of the work. The Town reserves the right to make any inquiries regarding qualifications.

The term "lowest responsible and eligible bidder" shall mean the bidder: (1) whose bid is the lowest of those bidders possessing the skill, ability and integrity necessary for the faithful performance of the work; (2) who shall certify, that he is able to furnish labor that can work in harmony with all other elements of labor employed or to be employed in the work; (3) who shall certify that all employees to be employed at the worksite will have successfully completed a course in construction safety and health approved by the United States Occupational Safety and Health Administration that is at least 10 hours in duration at the time the employee begins work and who shall furnish documentation of successful completion of said course with the first certified payroll report for each employee; (4) who, where the provisions of section 8B of chapter 29 apply, shall have been determined to be qualified thereunder; and (5) who obtains within 10 days of the notification of contract award the security by

bond required under section 29 of chapter 149; provided that for the purposes of this section the term "security by bond" shall mean the bond of a surety company qualified to do business under the laws of the commonwealth and satisfactory to the awarding authority; provided further, that if there is more than 1 surety company, the surety companies shall be jointly and severally liable.

The winning bidder is required to have and submit the following:

a) Completed Bid Forms
b) OSHA Training
c) Bid Deposit 5% of the value of the total bid
d) 50% payment bond
e) Statement of Bidder's Qualifications
f) Reference Form
g) Certificate of Good Faith
h) Certificate of State Tax Compliance
i) Clerk’s Certificate (for corporations only)

END OF SECTION

TOWN OF ROCHESTER, MASSACHUSETTS
OFFICE OF THE TOWN ADMINISTRATOR
c/o OFFICE OF THE TOWN PLANNER

CHSGOD INFRASTRUCTURE IMPROVEMENTS

ADVERTISEMENT

The Office of the Town Administrator of the Town of Rochester, MA will receive sealed Bids for the construction of Proposed Roadway and Site Improvements in Rochester until Wednesday, May 1, 2024, at 1:00 P.M. local time, at the Office of the Town Planner, Rochester Town Hall Annex, 37 Marion Road, Rochester, MA 02770 at which time and place they will be publicly opened and read. All Bids shall be submitted within a sealed envelope addressed to the Town Administrator/Procurement Officer c/o the Rochester Town Planner and entitled "Bid for Contract - CHSGOD Infrastructure Improvements ". A non-mandatory pre-bid meeting will be held at the project site on Friday, April 5, 2024, at 10:00 a.m. All interested bidders are encouraged to attend.

The project consists of construction of installation of water infrastructure and associated work, including additional construction of bituminous concrete and concrete sidewalks, ADA accessible ramps, vertical granite curbing, adjustment and replacement of catch basin frames and grates, removal of existing drainage structures, closure of existing curb cuts, creation of new curb cuts, paving, loaming and seeding, all earthwork necessary to complete the installations, and appurtenant Work in accordance with the drawings and specifications (Contract Documents).

The Contractor shall supply all labor, materials and equipment necessary to complete the work shown on the Contract Drawings and hereinafter contained in the Specifications. The Contractor shall pay for all water connection fees associated with the project as payable to the Town of Wareham Water Fire District. These fees are ESTIMATED at approximately $71,913.26 as outlined in an estimate provided by the Wareham Fire District. The Contractor shall be required to verify this estimate as appropriate.

Bidding documents are available in electronic PDF format and hard copy format. Electronic files can be obtained by contacting Phil Cordeiro at Allen & Major Associates, Inc., 10 Main Street, Lakeville, MA, 02347-1674 or e-mail at PCordeiro@allenmajor.com. Hard copy documents may be obtained from the office of Allen & Major Associates, Inc., 10 Main Street, Lakeville, MA, 02347-1674, during normal business hours, generally 8:30 A.M. to 5:00 P.M. local time Monday through Friday.

A complete set of the Bidding Documents may be obtained from the Engineer, Allen & Major, Inc., for a deposit of Seventy-Five Dollars ($75.00) or Twenty Dollars ($20.00) for plans only in cash or check, made payable to Allen & Major Associates, Inc. This deposit will be refunded to document holders of record who return the Bidding Documents to the Engineer in good condition within fourteen (14) days after the opening of bids.

All requests for mailing of Bidding Documents shall be accompanied by a separate nonrefundable handling or mailing fee in the amount of Twenty-Five Dollars ($25.00) in cash or check made payable to Allen & Major Associates, Inc., One (1) set of Bidding Documents will be furnished for the deposit and mailing fee stated.

Each bid shall be accompanied by a Bid Bond, Cash, Certified Check or a Treasurer's or Cashier's Check issued by a responsible Bank or Trust Company, in the amount of five (5) percent of the submitted bid, as Bid Security.

Attention of the Bidder is called to the requirements for minimum wage rates to be paid under this Contract and the reporting associated thereto. Minimum wage rates are required as per M.G.L, Chapter 149, Section 26 to 27D inclusive. Minimum wage rates determined by the Commissioner are as contained in the Contract Documents as Appendix A, or the current wage rates at the time of Award.

The successful Bidder will be required to furnish a 50% Payment Bond on the forms provided, based on the amount of the Contract.

Contract payment will be by the lump sum price and/or unit price method as indicated on the Bid Form. No Bidder may withdraw their Bid for a period of thirty (30) days after the date designated above for the opening.

Bids for this Contract are subject to the provisions of Massachusetts General Laws (MGL) Chapter 30, Section 39M.

The Owner reserves the right to reject any or all Bids or to accept any Bid deemed by them to be in the best interest of the Town of Rochester, and to limit the extent of the work to keep within the limits of available funds.

RULE FOR AWARD: The contract will be awarded to the lowest responsible and eligible bidder. The lowest responsible and responsive contractor/firm must possess the skill, ability, and integrity necessary for the faithful performance of the work. The Town reserves the right to make any inquiries regarding qualifications. “Lowest Responsible Bidder” shall be as defined under MGL and contained within the Invitation to Bid.

TOWN OF ROCHESTER, MASSACHUSETTS

OFFICE OF THE TOWN ADMINISTRATOR
Glenn Cannon, Town Administrator/Procurement Officer

HIGHWAY DEPARTMENT
Jeffrey Eldridge, Highway Surveyor

ENGINEER
Allen & Major Associates, Inc
10 Main Street, Lakeville, MA, 02347-1674

WAREHAM FIRE DISTRICT
Andrew Cunningham, Superintendent

BASE BID

DOCUMENT 00410 – BID FORM

Project Title: CHSGOD Infrastructure Improvements

Contract ID: 22MWIPROCHESTERCROSS

Location: Rochester, Massachusetts

To: Office of the Town Administrator c/o Office of the Town Planner

Having carefully examined the Contract Documents prepared by Allen & Major Associates, Inc., the Contract forms, the Addenda, and having become thoroughly familiar with the site and conditions under which the work is to be performed, this Bidder agrees to complete the Work of the BASE BID (and any alternates if awarded) in this project in accordance with those Documents and BID FORM at the unit price(s)/lump sum(s) as stated in the Bid Form for a total amount of :

_____Dollars ($ _____)

_____

From:_____
(name of Bidder)

All prices, except the extended totals, shall be stated in both words and figures. In the event of a discrepancy between the price in words and the price in figures, the written word shall govern. In the event of a discrepancy between mathematical totals and the totals stated, the mathematical totals shall govern.

All prices shall be typewritten or written by hand (printed) in black ink.

All bid questions shall be submitted in writing at least 5 business days prior to the bid closing. Any responses shall be provided to bidders 2 business days prior to the bid closing.

The Town reserves the right to accept or reject the Additive Alternate Bids and to determine the lowest responsible and eligible bidder based on the Base Bid or the sum of the Base Bid and Alternate Bids. The lowest bidder for the purpose of award shall be the lowest amount for the Base Bid or the Base Bid and awarded Alternate Bid(s) within the funds available.

BASE BID

ITEM NO.	MASS DOT ITEM NO.	ITEM DESCRIPTION AND UNIT PRICE BID WRITTEN IN WORDS	UNIT	ESTIMATED QUANTITY	UNIT PRICE	TOTAL PRICE
1	101	Clearing and Grubbing, for the unit price of: _____ Dollars (words) and _____ Cents	A	0.15		
2	124	Loam, excavated and stacked, for the unit price of: _____ Dollars (words) and _____ Cents	LS	1		
3	129.2	Old Pavement Excavation for the unit price of: _____ Dollars (words) and _____ Cents	SY	516		
4	142	Class B Trench Excavation for the unit price of: _____ Dollars (words) and _____ Cents	CY	880		
5	146	Drainage Structure Removed for the unit price of: _____ Dollars (words) and _____	EA	1		

		Cents				
6	148.4	Mobilization for the unit price of: _____ Dollars (words) and _____ Cents	LS	1		
7	150	Ordinary Borrow for the unit price of: _____ Dollars (words) and _____ Cents	CY	440		
8	151	Gravel Borrow (Type B) for the unit price of: _____ Dollars (words) and _____ Cents	CY	200		
9	154	Sand Borrow for the unit price of: _____ Dollars (words) and _____ Cents	CY	284		
10	170	Fine Grading and Compacting – Subgrade Area for the unit price of: _____ Dollars (words) and _____ Cents	SY	516		
11	220	Drainage Structure Adjusted for the unit price of: _____	Ea.	2		

		Dollars (words) and _____ Cents				
12	222.1	Frame and Grate – MassDOT Cascade Type for the unit price of: _____ Dollars (words) and _____ Cents	Ea.	2		
13	223.2	Frame and Grate (or Cover) Removed and Discarded for the unit price of: _____ Dollars (words) and _____ Cents	Ea.	3		
14	227.4	Masonry Plug for the unit price of: _____ Dollars (words) and _____ Cents	SF	10		
15	271.12	12 Inch and under pipe removed and stacked for the unit price of: _____ Dollars (words) and _____ Cents	FT	8		
16	303.06	6 Inch DI Water Pipe for the unit price of: _____ Dollars (words) and _____	FT	115		

		Cents				
17	303.08	8 Inch DI Water Pipe for the unit price of: _____ Dollars (words) and _____ Cents	FT	300		
18	303.12	12 Inch DI Water Pipe for the unit price of: _____ Dollars (words) and _____ Cents	FT	1,642		
19	309	Ductile Iron Fittings for Water Pipe for the unit price of: _____ Dollars (words) and _____ Cents	LS	1		
20	350.06	6 Inch Gate Valve and Box for the unit price of: _____ Dollars (words) and _____ Cents	Ea.	7		
21	350.08	8 Inch Gate Valve and Box for the unit price of: _____ Dollars (words) and _____ Cents	Ea.	1		
22	350.12	12 Inch Gate Valve and Box for the unit price of: _____ Dollars	Ea.	5		

		(words) and _____ Cents				
23	369.12	12 X 12 Inch Tapping Sleeve and Valve for the unit price of: _____ Dollars (words) and _____ Cents	Ea.	1		
24	376	Hydrant for the unit price of: _____ Dollars (words) and _____ Cents	Ea.	4		
25	440	Calcium Chloride for Roadway Dust Control for the unit price of: _____ Dollars (words) and _____ Cents	LS	1		
26	443	Water for Roadway Dust Control for the unit price of: _____ Dollars (words) and _____ Cents	LS	1		
27	450.22	Superpave Surface Course – 9.5 (SSC-9.5) for the unit price of: _____ Dollars (words) and _____ Cents	Ton	83		
28	450.23	Superpave Surface Course –	Ton	112		

		12.5 (SSC-12.5) for the unit price of: _____ Dollars (words) and _____ Cents				
29	452	Asphalt Emulsion for Tact Coat for the unit price of: _____ Dollars (words) and _____ Cents	LS	1		
30	482.3	Saw cutting Asphalt Pavement for the unit price of: _____ Dollars (words) and _____ Cents	FT	1,284		
31	506	Granite Curb Type VB – Straight for the unit price of: _____ Dollars (words) and _____ Cents	FT	665		
32	506.1	Granite Curb Type VB – Curved for the unit price of: _____ Dollars (words) and _____ Cents	FT	50		
33	509.1	Granite Transition Curb for Pedestrian Curb Ramp – Curved for the unit price of: _____ Dollars	FT	217		

		(words) and _____ Cents				
34	594	Curb Removed and Discarded for the unit price of: _____ Dollars (words) and _____ Cents	FT	1,219		
35	697.1	Silt Sack for the unit price of: _____ Dollars (words) and _____ Cents	Ea.	13		
36	701	Cement Concrete Sidewalk for the unit price of: _____ Dollars (words) and _____ Cents	SY	350		
37	701.2	Cement Concrete Pedestrian Curb Ramp for the unit price of: _____ Dollars (words) and _____ Cents	SY	40		
38	715	Rural Mailbox Removed & Reset for the unit price of: _____ Dollars (words) and _____ Cents	Ea.	1		
39	751	Loam for roadsides for the unit price of:	CY	124		

		_____ Dollars (words) and _____ Cents				
40	765	Seeding for the unit price of: _____ Dollars (words) and _____ Cents	SY	745		
41	850.41	Roadway flagger for the unit price of: _____ Dollars (words) and _____ Cents	HR	1		
42	851.1	Traffic Cones for Traffic Management for the unit price of: _____ Dollars (words) and _____ Cents	Day	1		
43	852	Safety Signing for Traffic Management for the unit price of: _____ Dollars (words) and _____ Cents	SF	1		
44	860.106	6 Inch Reflectorized White Line (Painted) for the unit price of: _____ Dollars (words) and _____	FT	155		

		Cents				
45	860.112	12 Inch Reflectorized White Line (Painted) for the unit price of: _____ Dollars (words) and _____ Cents	FT	363		
46	864.02	Pavement Arrow and Legends for the unit price of: _____ Dollars (words) and _____ Cents	SF	132		
47	874.2	Traffic Sign Removed and Reset for the unit price of: _____ Dollars (words) and _____ Cents	Ea.	2		
48		Miscellaneous for the unit price of: _____ Dollars (words) and _____ Cents	LS	1		
49		Permit Fees for the unit price of: _____ Dollars (words) and _____ Cents	LS	1		

THE TALLY ABOVE IS INTENDED TO PROVIDE AN ENGINEER'S ESTIMATE OF THE QUANTITY OF WORK REQUIRED UNDER THIS CONTRACT. THE CONTRACTOR

SHALL BE RESPONSIBLE FOR INDEPENDENTLY VERIFYING THE QUANTITIES AND IDENTIFYING ANY DISCREPANCIES THAT AFFECT BID PRICING.

Total Base Bid in Figures: $_____

Total Base Bid in Words: _____

ADDITIVE ALTERNATE

ITEM NO.	MASS DOT ITEM NO.	ITEM DESCRIPTION AND UNIT PRICE BID WRITTEN IN WORDS	UNIT	ESTIMATED QUANTITY	UNIT PRICE	TOTAL PRICE
1	142	Class B Trench Excavation for the unit price of: _____ Dollars (words) and _____ Cents	CY	31		
2	150	Ordinary Borrow for the unit price of: _____ Dollars (words) and _____ Cents	CY	16		
3	151	Gravel Borrow (Type B) for the unit price of: _____ Dollars (words) and _____ Cents	CY	4		
4	154	Sand Borrow for the unit price of: _____ Dollars (words) and _____	CY	10		

		Cents				
5	303.06	8 Inch DI Water Pipe for the unit price of: _____ Dollars (words) and _____ Cents	FT	12		
6	303.12	12 Inch DI Water Pipe for the unit price of: _____ Dollars (words) and _____ Cents	FT	61		
7	350.06	8 Inch Gate Valve and Box for the unit price of: _____ Dollars (words) and _____ Cents	Ea.	1		
8	350.12	12 Inch Gate Valve and Box for the unit price of: _____ Dollars (words) and _____ Cents	Ea.	1		
9	369.06	8 X 8 Inch Tapping Sleeve and Valve for the unit price of: _____ Dollars (words) and _____ Cents	Ea.	1		

10	450.23	Superpave Surface Course – 12.5 (SSC-12.5) for the unit price of: _____ Dollars (words) and _____ Cents	Ton	2		
11		Miscellaneous for the unit price of: _____ Dollars (words) and _____ Cents	LS	1		
12		Permit Fees for the unit price of: _____ Dollars (words) and _____ Cents	LS	1		

THE TALLY ABOVE IS INTENDED TO PROVIDE AN ENGINEER'S ESTIMATE OF THE QUANTITY OF WORK REQUIRED UNDER THIS CONTRACT. THE CONTRACTOR SHALL BE RESPONSIBLE FOR INDEPENDENTLY VERIFYING THE QUANTITIES AND IDENTIFYING ANY DISCREPANCIES THAT AFFECT BID PRICING.

Total Additive Alternate in Figures: $_____

Total Additive Alternate in Words: _____

The undersigned agrees that for extra work, if any, performed in accordance with the terms and provisions of the annexed form of Agreement, they will accept compensation as stipulated herein as full payment for such extra work.

If the Bid is accepted by the Owner, the undersigned agrees to commence work under this Contract on a date to be specified in a written "Notice to Proceed" by the Owner and complete the entire work provided to be done under this Contract within the time stipulated in the

Agreement. If this bid is accepted by the Owner, the undersigned also agrees to comply with the provisions of Section 21 "Liquidated Damages".

As provided in the Information for Bidders, the bidder hereby agrees what they will not withdraw their Bid within 30 days after the actual date of the opening of the Bids, and that, if the Owner shall accept this Bid, the bidder will duly execute and acknowledge the Agreement and furnish, duly executed and acknowledged, the required Contract Documents within fourteen (14) calendar days after notification that the Agreement and other Contract Documents are ready for signature.

Should the bidder fail to execute any of the agreements as hereinabove set forth, the Owner shall have the right to retain, as liquidated damages, the Bid Security (attached in the sum of 5 percent of Total Bid).
_____ Dollars,

($_____) which shall become the Owner's property for the delay and additional expense to the Owner caused thereby. If a bid bond was given, it is agreed that the amount thereof shall be paid as liquidated damages to the Owner by the Surety. (Bidder must fill in the foregoing blank)

The bidder hereby acknowledges the receipt of and has included in this Bid, the following Addenda:
(Bidder to complete)

Addenda No. ___, dated _____

Addenda No. ___, dated _____

Addenda No. ___, dated _____

Addenda No. ___, dated _____

The bidder, by submittal of this Bid, agrees with the Owner that the amount of the bid security deposited with this Bid fairly and reasonably represents the amount of damages the Owner will suffer due to the failure of the bidder to fulfill his agreements as provided above.

(Seal)

_____
Name of Bidder

By:_____
(Signature and title of authorized representative)

_____

Business Address

_____
City, State

Date:_____

The bidder is a corporation incorporated in the State/Commonwealth of _____ a partnership/individual (Bidder must add or delete to make the necessary corrections).

Pursuant to M.G.L. c. 30 Section 39L contractors and subcontractors that are foreign corporations must be registered with the Secretary of State and file all required annual reports.

(Note: If the bidder is a corporation, affix a corporate seal and give below the names of its persistent, treasurer and general manager, if any; if a partnership, give the full names and residential addresses of all partners and if an individual, give the residential address, if different from business address.)

The required names and addresses of all persons interested in the foregoing Bid, as Principals are as follows:

_____
_____
_____
_____
_____

CERTIFICATE OF AUTHORIZATION FOR BIDDING REPRESENTATIVE

(Note: Bidder must complete for certification of authorized representative signing Bid)

At a duly authorized meeting of the Board of Directors of the _____
(Name of Company)
held on _____, at which all the Directors were present or waived notice, it
(Date)
was voted that _____ _____ of
(Name) (Title)

this company shall be and is hereby authorized to execute bidding documents, contract and bonds in the name and on behalf of said company, and to affix the corporate seal thereto, and such execution of any contract obligation in this company's name and on its behalf of such _____ under seal of the company shall be valid
(Title)

and binding upon this company.

A true copy attest: _____
(Clerk)

Place of Business: _____

_____

I hereby certify that I am the clerk of _____ and that
(Company Name)
_____ is duly elected _____ of said company
(Representative) (Title)

and that the above vote has not been amended or rescinded and remains in full force and effect as of the date of this contract.

_____ Corporate Seal
(Clerk)

STATEMENT OF BIDDERS QUALIFICATIONS

The following shall accompany the bid and is required as evidence of the bidder's qualifications to perform the work, as bid upon, in accordance with the contract drawings and specifications. This statement must be notarized. All questions must be answered. Additional data may be submitted on separate attached sheets.

1. Name of Bidder: _____

2. Permanent Main Office Address: _____

3. Official Mailing Address: _____

4. When Organized? _____

5. Where incorporated, if a corporation: _____

6. Years contracting under present name: _____

7. List contracts on hand and those completed similar in nature to this kind of project and include the following: Owner, Engineer, Contract, Description, Contract Amount, Completion Date:
   _____
   _____
   _____
   _____
   _____
   _____

8. List any work the firm has failed to complete, state where and why:
   _____
   _____
   _____

9. If you have ever defaulted on any contract, state where and why:_____
   _____
   _____

Signed under the penalties of perjury,

By: _____
(Title)

COMMONWEALTH OF MASSACHUSETTS

Plymouth County, ss. _____, 2024

Then personally appeared the above named _____ and acknowledged the foregoing instrument to be his free act and deed as aforesaid, before me and the free act and deed for

_____.
(Company)

_____
Notary Public
My Comm. Expires:

TOWN OF ROCHESTER, MASSACHUSETTS
OFFICE OF THE TOWN ADMINISTRATOR

CHSGOD INFRASTUCTURE IMPROVEMENTS

CONTRACT SIGNING DOCUMENTS

INDEX

DESCRIPTIONS	PAGE NUMBER
Invitation to Bid	000200-1
Advertisement to Bid	00030-1
Bid Form and Qualifications	00410-1
Notice of Award	00500-1
Agreement	00510-1
Signature Page	00510-4
Certificate of Vote	00510-5
Contract Prices	00510-6
Contractor's Certification	00510-7/8
Notice to Proceed	00520-1
Payment Bond	00620-1/3

TOWN OF ROCHESTER, MASSACHUSETTS
OFFICE OF THE TOWN ADMINISTRATOR

CHSGOD INFRASTRUCTURE IMPROVEMENTS

NOTICE OF AWARD

To: _____

_____

_____

_____

The OWNER has considered the Bid submitted by you for the above-described Work in response to its Advertisement to Bids dated April 1, 2024 and Invitation to Bid.

You are hereby notified that your Bid has been accepted in the amount of $_____, based upon summation of lump sum prices and/or unit prices based upon estimated quantities.

You are required by the Advertisement to Bid to execute the Agreement and furnish the required Contractor's Payment Bond, Certificates of Insurance and Certification Form, and Certificate of Vote within ten (10) calendar days from the date of receipt of this Notice of Award.

If you fail to execute said Agreement and to furnish said Bonds and Certificates within ten (10) days from the date of receipt of this Notice, said OWNER will be entitled to consider all your rights arising out of the OWNER'S acceptance of your Bid as abandoned and as a forfeiture of your Bid Security. The OWNER will be entitled to such other rights as may be granted by law.

You are required to return within five (5) days an acknowledged copy of this Notice of Award to the OWNER.

Dated this_____day of_____

By_____
(Owner/Owner's Representative)

Title_____

ACCEPTANCE OF NOTICE

Receipt of the above Notice of Award is hereby acknowledged:

By_____
(Contractor)

this the _____day of _____, 20___.

By_____

Title_____

TOWN OF ROCHESTER[1]

DATE: _____

This Contract is entered into on, or as of, this date by and between the Town of ROCHESTER, 1 CONSTITUTION WAY, ROCHESTER, MA (the "Town"), and

_____
["Contractor"]

_____
[Contact Name for Responsible Person]

_____

_____

_____
[Address of the Contractor]

_____ _____
[Telephone Number] [FAX Number]

_____
[email address]

1. This is a Contract for the procurement of the following:

The project consists of furnishing and installing all materials necessary for construction of water infrastructure, sidewalks, utilities, and roadway improvements as outlined in the contract documents, "CHSGOD Infrastructure Improvements, in the Town of Rochester" dated April 1, 2024 as prepared by Allen & Major Associates, Inc.

2. The Contract value is: $_____

3.1.1 If any portion of the contract price is to be paid by a private citizen(s) no work shall be performed until a sum has been deposited with the Town Treasurer, upon an estimate made by the board, committee or officer having charge of the work, sufficient to cover the payment for the portion of the said work chargeable to the private citizen(s).

3.2 Fees and Reimbursable Costs combined shall not exceed $_____as more fully set

[1] Contract Long Form, Services more than $25,000.00_NOT TO BE USED FOR ENGINEERING AND ARCHITECT CONTRACTS.

forth in the Contractor Documents.

3.3 There shall be no further costs, fees or reimbursable charges due the Contractor under this Contract unless said fees and/or costs are so set forth in writing. The Town will not pay any surcharge or premium on top of the direct out of pocket expenses, if any.

3.4 Final payment including any unpaid balance of the Contractor's compensation shall be due and payable when the Project/Goods/Services is/are delivered to the Town when the project is completed and the services are complete and/or the goods are delivered and accepted.

4. Security:

4.1 In the event the contract price exceeds the sum of $50,000.00, the Contractor must provide security in the form of a 50% Payment Bond or otherwise, conditioned upon the faithful performance of this Contract.

4.2 A Bid Deposit in the amount of 5% of the value of the total Bid is required.

5. Definitions:

5.1 Acceptance: All Contracts require proper acceptance of the described goods or services by the Town. Proper acceptance shall be understood to include inspection of goods and certification of acceptable performance for services by authorized representatives of the Town to insure that the goods or services are complete and are as specified in the Contract.

5.2 Contract Documents: All documents relative to the Contract including (where used) Request for Proposals and all attachments thereto, Instructions to Bidders, Proposal Form, General Conditions, Supplementary General Conditions, General Specifications, Other Specifications included in Project Manual, Drawings, all Addenda issued during the bidding period and Contractor's Response to the Request for Proposal. The Contract documents are complementary, and what is called for by any one shall be as binding as if called for by all. The intention of the document is to include all labor and materials, equipment and transportation necessary for the proper performance of the Contract.

5.3 The Contractor: The "other party" to any Contract with the Town. This term shall (as the sense and particular Contract so require) include Vendor, Contractor, Engineer, or other label used to identify the other party in the particular Contract. Use of the term "Contractor" shall be understood to refer to any other such label used.

5.4 Date of Substantial Performance: The date when the work is sufficiently complete, the services are performed, or the goods delivered, in accordance with Contract documents, as modified by approved Amendments and Change Orders.

5.5 Goods: Goods, Supplies, Services or Materials.

5.6 Subcontractor: Those having a direct Contract with the Contractor. The term includes one who furnished material worked to a special design according to the Drawings or Specifications of this work, but does not include one who merely furnishes material not so worked.

5.7 Work: The services or materials contracted for, or both.

6. Term of Contract and Time for Performance:

6.1 The Work under this Contract shall be completed by the Contractor in accordance with the provisions of the Contract Documents within 1 calendar year from the execution of the Notice to Proceed. Work beyond 1 calendar year is at the sole discretion of the Town of Rochester, and shall only be undertaken if extended, in writing, and not subject to assent by the Contractor, and subject to the availability and appropriation of funds as certified by the Town Accountant. Time is of the essence for the completion of the Contract. No work shall be performed between November 1, 2024 and April 1, 2025 within the public rights of way unless approved in writing by the authority having jurisdiction over the roadway (Town of Rochester/MassDOT).

6.2 It is expressly understood and agreed, by and between the Contractor and Town, that the time for the completion of the Work described herein is a reasonable amount of time for the same, taking into consideration the average climatic range and usual industrial and/or residential conditions prevailing in this locality. If the Contractor shall neglect, fail, or refuse to complete the Work by the Substantial Completion Date as herein specified, or any proper extension thereof by the Town, then the Contractor does hereby agree, as a part of the consideration for the awarding of this Contract, to pay to the Town $1,000.00 per daynot as a penalty but as liquidated damages for such breach of contract, for each any every calendar day that the Contractor shall be in default after the time stipulated for achieving Substantial Completion. The said amount is fixed and agreed upon by and between the Contractor and the Town because of the impracticability and extreme difficulty of fixing and ascertaining the actual damages the Town would in such an event sustain, and said amount is agreed to be the amount of damages which the Town would sustain and said amount shall be deducted by the Town from periodic payments.

7. Subject to Appropriation:

Notwithstanding anything in the Contract documents to the contrary, any and all payments which the Town is required to make under this Contract shall be subject to appropriation or other availability of funds as certified by the Town Accountant. In the absence of appropriation or availability as certified herein, this Contract shall be immediately terminated without liability for damages, penalties or other charges to the Town. In the event this is a multi-year contract, this Contract shall be subject to annual appropriation and in the event funds are not so appropriated,

this Contract shall terminate immediately without liability for damages, penalties or charges to the Town.

8. Permits and Approvals:

Permits, Licenses, Approvals and all other legal or administrative prerequisites to its performance of the Contract shall be secured and paid for by the Contractor except for the Order of Conditions which has been obtained and is made part of the Contract documents.

9. Termination and Default:

9.1 Without Cause. The Town may terminate this Contract on seven (7) calendar days notice when in the Town's sole discretion it determines it is in the best interests of the Town to do so, by providing notice to the Contractor, which shall be in writing and shall be deemed delivered and received when given in person to the Contractor, or when received by fax, express mail, certified mail return receipt requested, regular mail postage prepaid or delivered by any other appropriate method evidencing actual receipt by the Contractor. Upon termination without cause, Contractor will be paid for services rendered to the date of termination.

9.2 For Cause. If the Contractor is determined by the Town to be in default of any term or condition of this Contract, including those listed in section 15.02 of the General Conditions, the Town may terminate this Contract on seven (7) days notice by providing notice to the Contractor, which shall be in writing and shall be deemed delivered and received when given in person to the Contractor, or when received by fax, express mail, certified mail return receipt requested, regular mail postage prepaid or delivered by any other appropriate method evidencing actual receipt by the Contractor.

9.3 Default. The following shall constitute events of a default under the Contract:

any material misrepresentation made by the Contractor to the Town; 2) any failure to perform any of its obligations under this Contract including, but not limited to the following: (i) failure to commence performance of this Contract at the time specified in this Contract due to a reason or circumstance within the Contractor's reasonable control, (ii) failure to perform this Contract with sufficient personnel and equipment or with sufficient material to ensure the completion of this Contract within the specified time due to a reason or circumstance within the Contractor's reasonable control, (iii) failure to perform this Contract in a manner reasonably satisfactory to the Town, (iv) failure to promptly re-perform within a reasonable time the services that were rejected by the Town as unsatisfactory, or erroneous, (v) discontinuance of the services for reasons not beyond the Contractor's reasonable control, (vi) failure to comply with a material term of this Contract, including, but not limited to, the provision of insurance and non-discrimination, (vii) any other acts specifically and expressly stated in this Contract as constituting a basis for termination of this Contact, and (viii) failure to comply with any and all requirements of state law and/or regulations, and Town bylaw and/or regulations.

10. Suspension or Delay

See Contract Supplement "C" and General and Special Conditions

11. The Contractor's Breach and the Town's Remedies:

Failure of the Contractor to comply with any of the terms or conditions of this Contract shall be deemed a material breach of this Contract, and the Town of ROCHESTER shall have all the rights and remedies provided in the Contract documents, the right to cancel, terminate, or suspend the Contract in whole or in part, the right to maintain any and all actions at law or in equity or other proceedings with respect to a breach of this Contract, including "Damages" including but not limited to costs, attorney's fees or other damages resulting form said breach ("Damages") as well as specific performance, and the right to select among the remedies available to it by all of the above.

From any sums due to the Contractor for services, the Town may keep the whole or any part of the amount for expenses, losses and Damages incurred by the Town as a consequence of procuring services as a result of any failure, omission or mistake of the Contractor in providing services as provided in this Contract.

12. Statutory Compliance:

12.1 This Contract will be construed and governed by the provisions of applicable federal, state and local laws and regulations; and wherever any provision of the Contract or Contract documents shall conflict with any provision or requirement of federal, state or local law or regulation, then the provisions of law and regulation shall control. Where applicable to the Contract, the provisions of the General Laws are incorporated by reference into this Contract, including, but not limited to, the following:

General Laws Chapter 30B – Procurement of Goods and Services.

General Laws Chapter 30, Sec. 39, *et seq*: - Public Works Contracts.

General Laws Chapter 149, Section 44A, *et seq*: Public Buildings Contracts.

12.2 Wherever applicable law mandates the inclusion of any term and provision into a municipal contract, this Section shall be understood to import such term or provision into this Contract. To whatever extent any provision of this Contract shall be inconsistent with any law or regulation limiting the power or liability of cities and towns, such law or regulation shall control.

12.3 The Contractor shall comply with all Federal, State and local laws, rules, regulations, policies and orders applicable to the Work provided pursuant to this Contract, such provisions being incorporated herein by reference, and

shall be responsible for obtaining all necessary licenses, permits, and approvals required for the supply of such Work.

The Contractor shall indemnify and hold the Town harmless for and against any and all fines, penalties or monetary liabilities incurred by the Town as a result of the failure of the Contractor to comply with the previous sentence. If any discrepancy or inconsistency is discovered in the Drawings, Specifications or Contract for this work in violation of any such law, by-law, regulation, order or decree, it shall forthwith report the same in writing to the Town. It shall, at all times, itself observe and comply with all such existing and future laws, by-laws, regulations, orders and decrees; and shall protect and indemnify the Town, and its duly appointed agents against any claim or liability arising from or based on any violation whether by him or its agents, employees or subcontractors of any such law, by-law, regulation or decree.

13. Conflict of Interest:

Both the Town and the Contractor acknowledge the provisions of the State Conflict of Interest Law (General Laws Chapter 268A), and this Contract expressly prohibits any activity which shall constitute a violation of that law. The Contractor shall be deemed to have investigated the application of M.G.L. c. 268A to the performance of this Contract; and by executing the Contract documents the Contractor certifies to the Town that neither it nor its agents, employees, or subcontractors are thereby in violation of General Laws Chapter 268A.

14. Certification of Tax Compliance

This Contract must include a certification of tax compliance by the Contractor, as required by General Laws Chapter 62C, Section 49A (Requirement of Tax Compliance by All Contractors Providing Goods, Services, or Real Estate Space to the Commonwealth or Subdivision).

15. Non-Discrimination/Affirmative Action

The Contractor shall carry out the obligations of this Agreement in compliance with all requirements imposed by or pursuant to federal, State and local ordinances, statutes, rules and regulations and policies prohibiting discrimination in employment, including but not limited to, Title VII of the Civil Rights Act of 1964; the Age Discrimination in Employment Act of 1967; Section 504 of the Rehabilitation Act of 1973 and Mass. G. L. c. 151B, and any other executive orders, rules, regulations, requirements and policies relating thereto enacted by the Commonwealth of Massachusetts and the Town as they may be amended from time to time. Contractor shall not discriminate against any qualified employee or applicant for employment because of race, color, national origin, ancestry, ace, sex, religion, physical or mental handicap or sexual orientation.

15.1 As used in this section “affirmative action” means positive steps to ensure all qualified persons equal employment opportunity without regard to race, color, religion, sex or national origin at all stages of the employment process: recruitment, section,

placement, promotion, training, layoff and termination. It may include, but is not limited to, the following:

(a) Inclusion in all solicitation and advertisements for employees of a statement that the Contractor is an "Equal Opportunity Employer";
(b) Placement of solicitations and advertisements for employees in media that reaches minority groups;
(c) Notification in writing of all recruitment sources that the Contractor solicits the referral of applicants without regard to race, color, religion, sex or national origin;
(d) Direct solicitation of the support of responsible and appropriate community, state and federal agencies to assist recruitment efforts;
(e) Participation in, or establishment of, apprenticeship or training programs where outside programs are inadequate or unavailable to minority groups;
(f) Modification of collective bargaining agreements to eliminate restrictive barriers established by dual lines of seniority, dual rates of pay or dual lines of promotion or progression which are based on race, color, religion, sex or national origin; and
(g) Review selection, placement, promotion, training, layoff and termination procedures and requirements to ensure that they do not intentionally or unintentionally discriminate against qualified persons because of race, color, religion, sex or national origin.

15.2 The Contractor, if applicable, shall include in all compliance and progress reports submitted to the town a report which shall include: (a) A certificate stating that he or she is currently in compliance with the provisions of G.L. c. 152B and setting forth the Affirmative Action he or she is currently undertaking and will undertake during the contract period to provide equal employment opportunity for all qualified persons without regard to race, color, religion, sex or national origin; and (b) A statement in wiring supporting information signed by an authorized officer or agent on behalf of any labor union or other agency which refers workers or provides or supervises apprenticeship or other training programs which the Contractor deals, to the effect that the union or other agency's practices and policies do not discriminate on the basis of race, color, religion, sex or national origin; provided, in the event that the union or other agency shall refuse to execute such a statement, the Contractor need only so certify in writing.

15.3 A copy of any such report as described above, shall be filed in the office of the Town Clerk and shall upon said filing become a public record.

15.4 The Contractor will take Affirmative Action to ensure that employees are solicited and employed, and that employees are treated during employment, without regard to race, color, religion, sex or national origin.

15.5 The Contractor will in all solicitation or advertisements for employees placed by or on behalf of the Contractor, state that all qualified applicants will receive consideration for employment without regard to race, color, religion, sex or national origin.

15.6 In determining whether steps taken by the Contractor constitute Affirmative Action, the Town shall take into account the relevant characteristics of the Contractor including, but not limited to, the number of employees and the location of the principal and branch offices.

16. Assignment:

The Contractor shall not assign, sublet or otherwise transfer this Agreement, in whole or in part, without the prior written consent of the Town, and shall not assign any of the moneys payable under this Contract, except by and with the written consent of the Town.

17. Condition of Enforceability Against the Town:

This Contract is only binding upon, and enforceable against, the Town if: (1) the Contract is signed by the Office of the Town Administrator or its designee; and (2) endorsed with approval by the Town Accountant as to appropriation or availability of funds; and (3) endorsed with approval by the Town Counsel as to form.

18. Corporate Contractor:

If the Contractor is a corporation, it shall endorse upon this Contract (or attach hereto) its Clerk's Certificate certifying the corporate capacity and authority of the party signing this Contract for the corporation. Such certificate shall be accompanied by a letter or other instrument stating that such authority continues in full force and effect as of the date the Contract is executed by the Contractor. This Contract shall not be enforceable against the Town of ROCHESTER unless and until the Contractor complies with this section.

The Contractor, if a foreign corporation, shall file with the Commissioner of Corporations a Power of Attorney and duly authenticated copies of its Charter or Certificate of Incorporation; and said Contractor shall comply with all the laws of the Commonwealth.

19. Contractor's Personnel:

The Contractor shall utilize only its employees and shall not utilize any third-party contractors without prior written approval of the Town.

20. Liability of Public Officials:

To the full extent permitted by law, no official, employee, agent or representative of the Town of ROCHESTER shall be individually or personally liable on any obligation of the Town under this Contract.

21. Indemnification:

The Contractor shall indemnify, defend and save harmless the Town, the Town's officers, agents and employees, from and against any and all damages, liabilities, actions, suits, proceedings,

claims, demands, losses, costs, expenses, recoveries and judgments of every nature and description (including attorneys' fees) that may arise in whole or in part out of or in connection with the work being performed or to be performed, or out of any act or omission by the Contractor, its employees, agents, subcontractors, material men, and anyone directly or indirectly employed by any of them or anyone for whose acts any of them may be liable, regardless of whether or not it is caused in part by any party indemnified hereunder. The Contractor further agrees to reimburse the Town for damage to its property caused by the Contractor, its employees, agents, subcontractors or material men, and anyone directly or indirectly employed by any of them or anyone for whose acts any of them may be liable, including damages caused by his, its or their use of faulty, defective, or unsuitable material or equipment, unless the damage is caused by the Town's gross negligence or willful misconduct.

21.1 The Contractor further agrees to indemnify and hold harmless the Town, including the agents, employees and representatives of either, from and against all claims, damages, losses and expenses, including attorney's fees, arising out of or resulting from the performance of the work, provided that any such claim, damage, loss or expense (a) is attributable to bodily injury, sickness, disease or death, or to injury to or destruction of tangible property including the loss of use resulting therefrom and (b) is caused in whole or in part by any negligent act or omission of the Contractor, any Subcontractor, anyone directly or indirectly employed by any of them or anyone for whose acts any of them may be liable, regardless of whether or not it is caused in part by a party indemnified hereunder.

21.2 The Contractor shall be responsible for all damage or injury to property of any character during the prosecution of the work resulting from any act, omission, neglect, or misconduct in the manner or method of executing the work or due to the non-execution of the work or at any time due to defective work or materials.

21.3 In any and all claims against the town or any of their agents or employees by any employee of the Contractor, any Subcontractor, anyone directly or indirectly employed by any of them or anyone for whose acts any of them may be liable, the indemnification obligation under this paragraph shall not be limited in anyway by any limitation on the amount or type of damages, compensation or benefits payable by or for the Contractor or any Subcontractor under workmen's Compensation Acts, disability benefit acts or other employee benefit acts.

21.4 The Contractor hereby assumes the entire responsibility and liability for any and all injury to or death of any or all persons, including the Contractor's employees, and for any and all damage to property caused by, resulting from or arising in whole or in part out of any act, omission, or neglect on the part of the Contractor or of any Subcontractor or of anyone directly or indirectly employed by any of them, or of anyone for whose acts any of them may be liable in connection with operations under the Contract.

The foregoing provisions shall not be deemed to be released, waived, limit or modified in any respect by reason of any surety or insurance provided by the Contractor under the Contract.

22. Insurance

22.1 Insurance Requirements:

The following insurance shall be supplied by the successful bidder:

a. Automobile liability in amounts of not less than $100,000 and $300,000 for each vehicle and piece of equipment to be used in connection with any part of the service to be provided.
b. Public liability in the amount of $1,000,000 per claim and $3,000,000 in the aggregate naming the Town of Rochester as an additional insured. The Contractor shall agree to indemnify and hold harmless the Town of Rochester from any loss or damages, claims for mental anguish, harassment or discrimination sustained as a result of any act or omission on their part, that of their agents or servants, independent contractors employed by them, employees, invitees, or any other persons which are sustained or arise as a result of those matters prescribed under the contract.
    1. Failure to provide and continue in force such insurance during the period of this Contract shall be a material breach of this Contract, shall operate as an immediate termination thereof, and Contractor hereby agrees to indemnify the Town for all losses, claims, and actions resulting from the failure to provide the insurance required by this Article. The Town agrees to make reasonable effort to notify the Contractor of any duty arising out of this paragraph, but failure to make timely notice will not relieve the Contractor of any duty under this paragraph.
c. Worker's Compensation covering all permanent and part-time employees engaged in any part of the service to be provided;
    1. The Contractor shall provide by insurance for the payment of compensation and the furnishing of other benefits under Chapter 152 of the General Laws of Massachusetts (The Worker's Compensation Act) to all employees of the Contractor who are subject to the provisions of Chapter 152 of the General Laws of Massachusetts.

    2. Failure to provide and continue in force such insurance during the period of this Contract shall be a material breach of this Contract, shall operate as an immediate termination thereof, and Contractor hereby agrees to indemnify the Town for all losses, claims, and actions resulting from the failure to provide the insurance required by this Article. The Town agrees to make reasonable effort to notify the Contractor of any duty arising out of this paragraph, but failure to make timely notice will not relieve the Contractor of any duty under this paragraph.

3. The Contractor shall furnish to the Town a certificate evidencing such insurance prior to the execution of this Contract before the same shall be binding on the parties thereto, except if specifically waived by the Town.

22.2 Reserved

22.3 Other Insurance Requirements

a. Comprehensive commercial general liability insurance with limits of at least $1 Million per occurrence and $3 Million annual aggregate for property damage and $1 Million per person and $3 Million per occurrence for bodily injury, which shall include the Town of Rochester as an additional insured, and which shall cover bodily injury, sickness or disease, or death of any person including employees and those persons other than the Contractor's employees, and claims insured by usual personal liability coverage, death, or property damage arising out of the Work including injury or destruction of tangible property, including loss of use resulting therefrom.

b. Motor vehicle insurance for any motor vehicles used in performing the Work, with limits of at least $500,000 per person, and $1 Million per accident.

c. The intent of the Specifications regarding insurance is to specify minimum coverage and minimum limits of liability acceptable under the Contract. However, it shall be the Contractor's responsibility to purchase and maintain insurance of such character and in such amounts as will adequately protect it and the Town from and against all claims, damages, losses and expenses resulting from exposure to any casualty liability in the performance of the work, including and not limited to Professional liability insurance where applicable.

d. All policies shall identify the Town as an additional insured (except Workers' Compensation and Professional Liability). The Contractor shall notify the Town immediately upon the cancellation or amendment to any policy. Renewal Certificates shall be filed with the Town at least ten (10) days prior to the expiration of the required policies. Certificates evidencing all such coverage shall be provided to the Town upon the execution of this Contract, and upon the renewal of any such coverage. Each such certificate shall specifically refer to this Contract and shall state that such insurance is as required by this Contract. Failure to provide the notices required in this Section or to continue in force such insurance shall be a material breach of this Contract and shall be grounds for immediate termination. Said insurance shall include: Workers Compensation/Employers' Liability Insurance, Business Automobile

Liability Insurance, and Commercial General Liability Insurance (CGL). The CGL policy shall include coverage for liability arising from premises, operations, independent Contractors, personal injury, contractual liability. All Certificates of Insurance shall be on the "MIIA" or "ACORD" Certificate of Insurance form, shall contain true transcripts from the policies, authenticated by the proper officer of the Insurer, evidencing in particular those insured, the extent of coverage, the location and operations to which the insurance applies, the expiration date and the above-mentioned notice clauses. All insurance shall be written on an occurrence basis. Coverage shall be maintained without interruption from date of the Contract until date of final payment and termination of any coverage required to be maintained after payment.

e. The Contractor shall obtain and maintain during the term of this Contract the insurance coverage in companies licensed to do business in the Commonwealth of Massachusetts and acceptable to the Town.

f. Additional insurance requirements are detailed in Section 00700 and 00800. If there are discrepancies in coverage amount between the two, Section 00510 governs.

23. Documents, Materials, Etc.

Any materials, reports, information, data, etc. given to or prepared or assembled by the Contractor under this Contract are to be kept confidential and shall not be made available to any individual or organization by the Contractor (except agents, servants, or employees of the Contractor) without the prior written approval of the Town, except as otherwise required by law. The Contractor shall comply with the provisions Chapter 66A of the General Laws of Massachusetts as it relates to public documents, and all other state and federal laws and regulations relating to confidentiality, security, privacy and use of confidential data.
Any materials produced in whole or in part under this Contract shall not be subject to copyright, except by the Town, in the United States or any other country. The Town shall have unrestricted authority to, without payment of any royalty, commission, or additional fee of any type or nature, publicly disclose, reproduce, distribute and otherwise use, and authorize others to use, in whole or in part, any reports, data or other materials prepared under this Contract.

All data, reports, programs, software, equipment, furnishings, and any other documentation or product paid for by the Town shall vest in the Town at the termination of this Contract. The Contractor shall at all times, during or after termination of this Contract, obtain the prior written approval of the Town before making any statement bearing on the work performed or data collected under this Contract to the press or issues any material for publication through any medium.

24. No Employment

The Contractor acknowledges and agrees that it is acting as an independent Contractor for all

services rendered pursuant to this Contract, and neither the Contractor, nor its employees, agents, servants nor any person for whose conduct the Contractor is responsible shall be considered an employee or agent of the Town for any purpose and shall not file any claim or bring any action for any worker's compensation unemployment benefits and compensation for which they may otherwise be eligible as a Town employee as a result of work performed pursuant to the terms of this Contract.

25. Audit, Inspection and Recordkeeping

At any time during normal business hours, and as often as the Town may deem it reasonably necessary, there shall be available in the office of the Contractor for the purpose of audit, examination, and/or to make excerpts or transcript all records, contracts, invoices, materials, payrolls, records of personnel, conditions of employment and other data relating to all matters covered by this Agreement.

26. Payment

The Town agrees to make all reasonable efforts to pay to the Contractor the sum set forth in the Contractor's bid or proposal within thirty (30) days of receipt of an invoice detailing the work completed and acceptance from the Town of the work completed and in accordance with the procedures in the General and Supplemental Conditions.

27. Waiver and Amendment

Amendments, or waivers of any additional term, condition, covenant, duty or obligation contained in this Contract may be made only by written amendment executed by all signatories to the original Agreement, prior to the effective date of the amendment.

To the extent allowed by law, any conditions, duties, and obligations contained in this Contract may be waived only by written Agreement by both parties.

Forbearance or indulgence in any form or manner by a party shall not be construed as a waiver, nor in any manner limit the legal or equitable remedies available to that party. No waiver by either party of any default or breach shall constitute a waiver of any subsequent default or breach of a similar or different matter.

28. Severability

If any term or condition of this Contract or any application thereof shall to any extent be held invalid, illegal or unenforceable by the court of competent jurisdiction, the validity, legality, and enforceability of the remaining terms and conditions of this Contract shall not be deemed affected thereby unless one or both parties would be substantially or materially prejudiced.

29. Forum and Choice of Law

This Contract and any performance herein shall be governed by and be construed in accordance with the laws of the Commonwealth. Any and all proceedings or actions relating to subject matter herein shall be brought and maintained in the courts of the Commonwealth or the federal district court sitting in the Commonwealth, which shall have exclusive jurisdiction thereof. This paragraph shall not be construed to limit any other legal rights of the parties.

30. Notices

Any notice permitted or required under the provisions of this Contract to be given or served by either of the parties hereto upon the other party hereto shall be in writing and signed in the name or on the behalf of the party giving or serving the same. Notice shall be deemed to have been received at the time of actual service or three (3) business days after the date of a certified or registered mailing properly addressed. Notice to the Contractor shall be deemed sufficient if sent to the address set forth on page 1 or furnished from time to time in writing hereafter.

31. Binding on Successors:

This Contract is binding upon the parties hereto, their successors, assigns and legal representatives (and where not corporate, the heirs and estate of the Contractor). Neither the Town nor the Contractor shall assign or transfer any interest in the Contract without the written consent of the other.

32. Entire Agreement:

This Contract, which includes all documents incorporated herein by reference, including the Invitation For Bid for Contract 22MWIPROCHESTERCROSS and attachments as outlined in the Table of Contents, including specifically the Standard General Conditions of the Construction Contract and Supplementary Conditions of the Construction Contract – Construction Manager as Advisor Series, constitutes the entire integrated agreement between the parties with respect to the matters described. This Contract supersedes all prior agreements, negotiations and representations, either written or oral, and it shall not be modified or amended except by a written document executed by the parties hereto.

[THE REMAINDER OF THIS PAGE HAS INTENTIONALLY BEEN LEFT BLANK]

IN WITNESS WHEREOF the parties have hereto and to two other identical instruments set forth their hands and executed this as an instrument under seal this the day and year first above written.

The TOWN OF ROCHESTER by:

_____
Town Administrator Date

_____
Print Name

The Contractor by:

_____
Signature Date

_____
Print Name & Title

_____
Department Head Date

_____
Print Name

Certified as to Form:

_____
Town Counsel Date

Certified as to
Appropriation/Availability of Funds:

_____
Town Accountant Date

SUPPLEMENT "C"

[] CONSTRUCTION

SUPPLEMENT "C" - Applicable to Contracts for the construction of:

(3) Public Works
(governed by the provisions of General Laws Chapter 30, §39M, et seq)

1. This form supplements the TOWN OF ROCHESTER "Contract and General Conditions" and applies only to contracts for the construction, reconstruction, alteration, remodeling or repair of public works or public buildings.

2. Wherever the law requires one contracting with a city or town to be bonded, such obligation shall be understood to be a term and condition of this Contract. The Contractor agrees to secure such bond (where required) in the form required by the Town and provide an original thereof to the Town prior to the commencement of performance.

3. Equality:

   3.1. In the case of a closed Specification written for a specific item or items to be furnished under the Base Bid, such specifications shall, as applicable, be in compliance with the Massachusetts General Laws, Chapter 30, Section 39M and Chapter 149, Sec. 44A et seq.

   3.2. Where the name of an item, material or manufacturer is mentioned in the Specifications or on the Drawings, except as above noted, the intent is to establish a standard and in no way should be construed to exclude any item or manufacturer not mentioned by name, but whose product meets the Specifications as to design, utility and quality. Final decision shall rest solely with the Town's Project Representative (herein after "Project Representative") as to its acceptability.

4. Change Orders:

   4.1. Change orders must receive the approval of the Town Administrator and the appropriate Department or Division Head and must be supported by the project engineers and architects, if any.

   4.2. Change orders to contracts governed by General Laws Chapter 30B may not increase the quantity of goods or services provided by more than twenty-five (25%) per cent, in compliance with Sec. 13 of Chapter 30B.

5. The Contractor will carry out the obligations of this contract in full compliance with all of the requirements imposed by or pursuant to General Laws Chapter 151, Sec. 1, et seq. (Minimum Wage Law) and any executive orders, rules, regulations, and requirements of the

Commonwealth of Massachusetts as they may from time to time be amended. The Contractor will at all times comply with the wage rates as determined by the Commissioner of the Department of Labor and Industries, under the provisions of General Laws Chapter 149, Sections 26 and 27D (Prevailing Wage), as shall be in force and as amended.

6. The Contractor shall continuously maintain adequate protection of all work from damage and shall protect the property of the Town and others, including adjacent property, from injury or loss arising in connection with the Contract. The Contractor shall make good any such damage, injury or loss, except as may be directly due to errors in the Contract Documents or caused by agents or employees of the Town, or due to causes beyond the Contractor's control and not the Contractor's fault or negligence.

7. The Contractor shall take all necessary precautions for the safety of employees on the work, and shall comply with all applicable provisions of Federal, State and local laws and codes to prevent accidents or injury to persons on, about or adjacent to the premises where the work is being performed. The Contractor will erect and properly maintain at all times, as required by the conditions and progress of the work, all necessary safeguards for the protection of workers and the public, shall post danger signs warning against the hazards created by such features of construction such as pits, protruding nails, hosts, well holes, elevator hatchways, scaffolding, window openings, stairways and falling materials; and shall designate a responsible member of its organization on the work, whose duty shall be the prevention of accidents.

8. The Town shall at all times have access to the work wherever it is in preparation or progress and the Contractor shall provide suitable accommodations for such access.

9. The Contractor shall appoint a competent superintendent and foreman and any necessary assistants, all of whom shall be satisfactory to the Town. If the Town in its sole discretion determines that the construction superintendent, foreman, or assistants are unacceptable to the Town, then upon seven days notice from the Town, the Contractor shall replace such person or persons with people acceptable to the Town.

10. The Contractor shall give efficient supervision to the work, using its best skill and attention. The Contractor shall carefully study and compare the drawings, specifications and other instructions and shall at once report to the Town any error, inconsistency or omission which shall be discovered. Included in this responsibility shall be supervision of all work performed by subcontractors on the work.

11. Notwithstanding any other provision of this Contract to the contrary, if the Contractor should neglect to prosecute the work properly, or fail to perform the contract or any of its provisions, the Town, upon three days written notice, may, without prejudice to any other remedy it may have, make good such deficiencies and may deduct the cost thereof from the payment then or thereafter due the Contractor.

12. <u>Inspection by the Town's Project Representative</u>

12.1. The Town shall have the right to designate a Project Representative who may make periodic visits to the site to familiarize the Town generally with the progress and quality of the work, and to determine in general if the work is proceeding in accordance with the Contract Documents. The Project Representative will not be required to make exhaustive or continuous on-site inspections to check the quality or quantity of the work and will not be responsible for the Contractor's failure to carry out the construction work in accordance with the Contract Documents. During such visits and on the basis of these observations while at the site, the Project Representative will keep the Town informed on the progress of the work, will endeavor to guard the Town against defects and deficiencies in the work of contractors, and may condemn structural work as failing to conform to the Contract Documents. The Project Representative shall have authority to act on behalf of the Town only to the extent expressly delegated by the Town, which shall be shown to the Contractor, and shall have authority to stop the work whenever such stoppage may reasonably be necessary to insure the proper execution of the Contract.

12.2. In connection with the work, the Project Representative shall not be responsible for construction methods, means, techniques, sequences or procedures employed by the Contractor or the Contractor's safety programs, requirements, regulations, or precautions.

13. Decisions of the Project Representative

13.1. The Project Representative shall, within a reasonable time, make decisions on all claims of the Town or the Contractor and on all other matters relating to the execution and progress of the structural work or the interpretation of the Contract Documents.

13.2. The Project Representative's decision, in matters relating to the project, shall be final, if within the terms of the Contract Documents.

13.3. If, however, the Project Representative fails to render a decision within ten days after the parties have presented their evidence, either party may then avail itself of the remedies provided in this Contract or available to it by law. If the Project Representative renders a decision after such remedies have commenced, such decision may be entered as evidence but shall not disturb or interrupt such proceedings except where such decision is acceptable to the parties concerned.

14.1 Use of Premises by the Contractor:

14.1. The Contractor shall confine its apparatus, the storage of materials and the operations of its workmen to limits indicated by law, by-laws, permits or directions of the Town and shall not unreasonably encumber the premises with its materials.

14.2. The Contractor shall not load or permit any part of the structure to be loaded with a weight that will endanger its safety.

15. Maintenance of Premises:

The Contractor shall at all times keep the premises free from accumulation of waste materials or rubbish caused by its employees or work, and at the completion of the work it shall remove all its rubbish from and about the work site and all its tools, scaffolding and surplus materials and shall leave its work "broom-clean", or its equivalent, unless more exactly specified. In case of dispute, the Town may remove the rubbish and charge the cost to the several contractors, as the Town shall determine to be just.

16. Right to Terminate

In addition to any other remedies herein provided and notwithstanding any other provisions hereof to the contrary, if the Contractor should (1) be adjudged a bankrupt, (2) make a general assignment for the benefit of creditors, (3) have a receiver appointed on account of its insolvency, (4) persistently or repeatedly refuse or fail to supply enough personnel and resources to perform the contract, (5) fail to make prompt payment to subcontractors or to providers of materials or labor, (6) persistently disregard laws and regulations or lawful directives of the Town, or (7) be guilty of a substantial violation of any provision of the Contract, then the Town may, without prejudice to any other right or remedy and after giving the Contractor (or any surety) seven days written notice, terminate the contract and the employment of the Contractor and take possession of the premises and of all materials, tools and appliances thereon and finish the work by whatever method it deems appropriate.

In such cases, the Contractor shall not be entitled to receive any further payment until the work is finished. If the unpaid amount owed to the Contractor for work already completed shall exceed the expense of finishing the work, including compensation for additional architectural, managerial, legal and administrative services, such excess shall be paid to the Contractor. If such expenses shall exceed such unpaid balances, the Contractor shall pay the difference to the Town.

The Contractor shall not be relieved of liability to the Town by virtue of any termination of this Contract, and any claim for damages against the Contractor relating to the Contractor's performance under this contract shall survive any termination hereunder.

Notwithstanding any other provision of this Agreement, the Town reserves the right at any time in its absolute discretion to suspend or terminate this Agreement in whole or in part for its convenience upon seven days' written notice to the Contractor. The Town shall incur no liability by reason of such termination except for the obligation to pay compensation for all work performed by the Contractor and accepted by the Town to the termination date.

17. Progress Payments:

17.1. The Contractor shall submit to the Town an itemized Application for Payment, supported to the extent required by the Town by invoices or other vouchers,

showing payments for materials and labor, payments to Subcontractors and such other evidence of the Contractor's right to payment.

17.2. The Contractor shall, before the first application, submit to the Town a schedule of values of the various parts of the work, including quantities aggregating the total sum of the Contract, divided so as to facilitate payments to Subcontractors, made out in such form as the Town and the Contractor may agree upon, and, if required, supported by such evidence as to its correctness. This schedule, when approved by the Town, shall be used as a basis for payment, unless it is found to be in error. If applying for payments, the Contractor shall submit a statement based upon this schedule.

18. Withholding of Payments

18.1. The Town may withhold or, on account of subsequently discovered evidence, nullify the whole or part of any payment to such extent as may be necessary in its reasonable opinion to protect the Town of ROCHESTER from loss on account of:

18.1.1. Defective work not remedied.

18.1.2. Claims filed or reasonable evidence indicating probable filing of claims.

18.1.3. Failure of the Contractor to make payments properly to Subcontractors or for material or labor.

18.1.4. A reasonable doubt that the Contract can be completed for the balance then unpaid.

18.1.5. Damage to another contractor.

18.1.6. Delays resulting in liquidated damages.

18.2. Withholding of payments shall be in strict compliance with statutory requirements.

19. Claims by Contractor and Liability of Town

All claims by the Contractor against the Town shall, unless otherwise provided by law, be initiated by a written claim submitted to the Town no later than seven (7) calendar days after the event or the first appearance of the circumstances causing the claim. The claim shall set forth in detail all known facts and circumstances supporting the claim. The Contractor shall continue its performance under this contract regardless of the submission or existence of any claims.

The limit of liability of the Town under this Agreement is limited to the compensation provided herein for work actually performed, and shall in no event include liability for delays or for incidental, special or consequential damages or lost profits or for damages or loss from causes beyond the Town's reasonable control.

20. Damages for Delay:

The Contractor shall have not claims for any damages, costs, or expenses of any kind or nature, for any suspension, delay, interruption, or acceleration of the work on the part of the Town, architect, or any of their consultants in performing or furnishing any work, or resulting from problems or deficiencies with materials, information, or documentation and/or decisions in connection with the execution of the work. The Contractor's sole remedy for such delay shall be for a claim for an extension of time to its period of contract performance.

21. Liquidated Damages:

Because both parties recognize (1) that the time for completion of this Contract is of the essence, (2) that the Town will suffer loss if the work is not completed within the contract time specified, plus any extension thereof allowed in accordance with the provisions of this contract, and (3) the delays, expense and difficulties involved in a legal proceeding to determine the actual loss suffered by the Town if the work is not completed in time, it is agreed that the Contractor will pay the Town as liquidated damages representing an estimate of delay damages to which the Contractor agrees by entering into this Contract, not as a penalty, the sum of One Thousand Dollars ($1,000) per day for each calendar day of delay, as further described in Section 00100, until the work is completed, whether the work is completed by the Contractor or some other person. The Town's right to impose liquidated damages shall in no way prohibit or restrict the Town's right to bring a legal action for damages in lieu of or in addition to its option to impose liquidated damages. The Town may deduct any liquidated damages from money due the Contractor, and if such payment is insufficient to cover the liquidated damages, then the Contractor shall pay the amount due.

22. The Contractors' Mutual Responsibility:

Should the Contractor cause damage to any separate subcontractor on the work, the Contractor agrees, upon due notice, to settle with such contractor by agreement, or by recourse to remedies provided by law or by the provisions of the contract. If such separate contractor sues the Town on account of any damage alleged to have been sustained, the Town shall notify the Contractor, who shall defend such proceedings at the Town's expense and, if any judgment against the Town arises therefrom, the Contractor shall pay or satisfy it and pay all costs incurred by the Town including attorney's fees and related costs of litigation.

23. Separate Contracts:

23.1. The Town reserves the right to let other Contracts in connection with this work under similar General Conditions. The Contractor shall afford other contractors reasonable opportunity for the introduction and storage of their materials and the execution of their work, and shall properly connect and coordinate its work with theirs.

23.2. If any part of the Contractor's work depends, for proper execution or results, upon the work of any other contractor, the Contractor shall inspect and promptly report to the Town any defects in such work that render it unsuitable for such proper execution and results. Failure of the Contractor to so inspect and report shall constitute an acceptance of the other contractor's work as fit and proper for the reception of its work except as to defects which may develop in the other contractor's work after the execution of its work.

23.3. To insure the proper execution of its subsequent work, the Contractor shall measure work already in place and shall at once report to the Town any discrepancy between the executed work and the Drawings.

24. Subcontracts:

24.1. All Subcontracts shall be awarded in conformity with the requirements of the General Laws, Commonwealth of Massachusetts, Chapter 149, Sections 44A to 44L, inclusive.

24.2. The Contractor agrees that it is as fully responsible to the Town for the acts and omissions of its Subcontractors and of persons either directly or indirectly employed by them, as it is for the acts and omissions of persons directly employed by it.

24.3. Nothing contained in the Contract Documents shall create any contractual relationship between any Subcontractor and the Town.

25. Contractor-Subcontractor Relations:

The Contractor agrees to bind every Subcontractor and every Subcontractor agrees to be bound by the terms of the Agreement, the General Conditions of the Contract, the Supplementary General Conditions, the Drawings and Specifications, as far as applicable to its work, including the provisions of the General Laws, Commonwealth of Massachusetts, Chapter 149, Section 44A, et seq.

26. Liens:

Neither the Final Payment nor any part of the retained percentage shall become due until the Contractor, if required, shall deliver to the Town a complete release of all liens arising out of the Contract, or receipts in full in lieu thereof and, if required in either case, an affidavit that as far as it has knowledge or information, the releases and receipts include

Commonwealth of Massachusetts with regard to liens, Chapter 254 and 149 as amended (as a minimum requirement).

27. Guarantees:

27.1 The Contractor guarantees and warrants to the Town that all labor furnished under this Contract will be competent to perform the tasks undertaken, that the product of such labor will yield only first-class results, that materials and equipment furnished will be of good quality and new unless otherwise permitted by this Contract, and that the Work will be of good quality, free from faults and defects and in strict conformance with this Contract. All Work not conforming to these requirements may be considered defective.

27.2. If at any time any part of the work constructed under the terms of this contract shall in the opinion of the Town Administrator require repairing due to defective work or materials furnished by the Contractor, he may notify the Contractor in writing to make the required repairs. If the Contractor shall neglect to start such repairs within ten days of the date of giving it notice thereof and to complete the same to the satisfaction of the Town Administrator with reasonable dispatch, then the latter may employ other persons to make such repairs. The Town shall charge the expense thereof to the Contractor and may use any moneys still retained to pay for the same, and if such sum is insufficient, the Contractor shall be obligated to pay the balance thereof.

27.3. All guarantees and warranties required in the various Sections of the Specifications which originate with a Subcontractor or Manufacturer must be delivered to the Town before final payment to the Contractor may be made for the amount of that subtrade or for the phase of work to which the guarantee or warranty relates. The failure to deliver a required guarantee or warranty shall be held to constitute a failure of the Subcontractor to fully complete his work in accordance with the Contract Documents. The Contractor's obligation to correct work is in addition to, and not in substitution of, such guarantees or warranties as may be required in the various Sections of the Specifications.

IN WITNESS WHEREOF the parties have hereto and to two other identical instruments set forth their hands and executed this as an instrument under seal this the day and year first above written.

The TOWN OF ROCHESTER by:

_____
Town Administrator Date

_____
Print Name

The Contractor by:

_____
Signature Date

_____
Print Name & Title

Certified as to Form:

_____
Town Counsel Date

Certified as to
Appropriation/Availability of Funds:

_____
Town Accountant Date

CERTIFICATION OF GOOD FAITH

The undersigned certifies under pains and penalties of perjury that this contract has been obtained in good faith and without collusion or fraud with any other person. As used in this certification, the word "person" shall mean any natural person, business, partnership, corporation, union, committee, club, or other organization, entity, or group of individuals.

The Contractor by: _____
Print Name

_____
Title/Authority

CERTIFICATE OF STATE TAX COMPLIANCE

Pursuant to Massachusetts General Laws, Chapter 62C, Section 49A
_____, authorized signatory for
name of signatory
_____, whose
name of contractor
principal place of business is at _____,
_____does hereby certify under the pains and penalties of perjury
that _____ has paid all
name of contractor
Massachusetts taxes and has complied with all laws of the Commonwealth of Massachusetts relating to taxes, reporting of employees and contractors, and withholding and remitting child support.

_____
Signature Date

EXAMPLE CLERK'S CERTIFICATE

_____
Action of Shareholders
Written Consent

(Date)

The undersigned, being the Shareholders of _____, a Massachusetts Corporation (the "Corporation") entitled to vote on the action, hereby consent to the adoption of the following votes:

VOTED: That the [President and/or the Vice President or named individual], each of them acting singly is, authorized to execute any an all contract documents and to enter into and negotiate the terms of all contracts and to accomplish same and to execute any and all documents, instruments, and agreements in order to effectuate the transaction and that said transaction shall be valid, binding, effective, and legally enforceable.

VOTED: That the officers are, and each of them acting singly is, authorized, from time to time, in the name and on behalf of the Corporation to take or cause to be taken all such action(s) as s/he or they, as the case may be, deem necessary, appropriate or advisable to effect the foregoing votes, as may be shown by the officer or officers execution or performance which shall be conclusive evidence that the same is authorized by the directors of this Corporation.

VOTED: That the officers are, and each of them acting singly is, authorized, from time to time, in the name and on behalf of this Corporation, under its corporate seal, if desired, attested by an appropriate officer, if desired, to execute, make oath to, acknowledge, deliver and file any and all of the agreements, instruments, certificates and documents referred to or related to the foregoing votes.

VOTED: That the officers are, and each of them acting singly is, authorized, from time to time and on behalf of this Corporation, under its corporate seal, if desired, to execute, acknowledge and deliver any and all agreements, instruments, certificates and documents referred to or related to the foregoing votes, with such changes as the officer or officers so acting may deem necessary or desirable, and the signature of such officer or officers to be conclusive evidence that the same is authorized by the directors of this Corporation.

Clerk of Corporation Certificate

I, _____ the Clerk of the foregoing corporation, do hereby certify that the above vote was taken at a duly called meeting of the shareholders of the Corporation on _____, 20__.

_____
Clerk of Corporation

SEAL

TOWN OF ROCHESTER, MASSACHUSETTS
OFFICE OF THE TOWN MANAGER
c/o OFFICE OF THE TOWN PLANNER

PROPOSED WATER INFRASTRUCTURE AND ROADWAY IMPROVEMENTS IN THE TOWN OF ROCHESTER, MASSACHUSETTS

PERFORMANCE BOND

KNOW ALL PERSONS BY THESE PRESENTS: that

_____
(Name of Contractor)

_____
(Address of Contractor)

a _____hereinafter called PRINCIPAL and (Corporation, Partnership, or Individual)

_____
(Name of Surety)

_____
(Address of Surety)

hereinafter called Surety, are held and firmly bound unto

Town of Rochester
(Name of Owner)

1 Constitution Way, Rochester, MA 02770
(Address of Owner)

hereinafter called Owner, in the total aggregate penal sum of _____

_____ Dollars ($_____)

in lawful money of the United States, for the payment of which sum well and truly to be made, we bind ourselves, our heirs, executors, administrators, successors, and assigns, jointly and severally, firmly by these presents.

THE CONDITION OF THIS OBLIGATION is such that whereas, the Principal entered into a certain contract with the Owner, dated the ___ day of _____ 20____, a copy of which is hereto attached and made a part hereof for Contract CHSGOD Infrastructure Improvements.

Now, THEREFORE, if the Principal shall well, truly and faithfully perform its duties, all the undertakings, covenants, terms, conditions, and agreements of said Contract during the original term thereof, and any extensions thereof which may be granted by the Owner, with or without notice to the Surety and during the one year guarantee period, and if the Principal shall satisfy all claims and demands incurred under such Contract, and shall fully indemnify and save harmless the Owner from all costs and damages which it may suffer by reason of failure to do so, and shall reimburse and repay the Owner all outlay and expense which the Owner may incur in making good any default, then this obligation shall be void, otherwise to remain in full force and effect.

PROVIDED, FURTHER, that the said surety, for value received hereby stipulates and agrees that no change, extension of time, alteration or addition to the terms of the contract or to Work to be performed thereunder or the Specifications accompanying same shall in any way affect its obligation on this Bond, and it does hereby waive notice of any such change, extension of time, alteration or addition to the terms of the Contract or to the Work or to the Specifications.

PROVIDED, FURTHER, that it is expressly agreed that the Bond shall be deemed amended automatically and immediately, without formal and separate amendments hereto, upon amendment to the Contract not increasing the Contract Price more than 20 percent, so as to bind the Principal and the Surety to the full and faithful performance of the Contract as so amended. The term "Amendment", wherever used in this Bond, and whether referring to this Bond, the Contract or the Loan Documents shall include any alteration, addition, extension, or modification of any character whatsoever.

PROVIDED, FURTHER, that no final settlement between the Owner and the Principal shall abridge the right of the other beneficiary hereunder, whose claim may be unsatisfied. The Owner is the only beneficiary hereunder.

[REMAINDER OF PAGE INTENTIONALLY LEFT BLANK]

WITNESS WHEREOF, this instrument is executed in five (5) counterparts, each of which shall be deemed an original, this

_____ day of _____, 20 _____.

ATTEST:

_____
(Principal)

_____
(Principal Secretary)

(SEAL)

By_____

_____

_____
(Witness as to Principal)

_____
(Address)

_____

_____
(Surety)

ATTEST:

_____
(Witness as to Surety)

By_____
(Attorney-in-Fact)

_____
(Address)

_____
(Address)

_____

_____

NOTE: Date of Bond must not be prior to date of Contract.

If Contractor is partnership, all partners should execute Bond.

IMPORTANT: Surety companies executing Bonds must appear on the Treasury Department's most current list (Circular 570 as amended) and be authorized to transact business in the State where the Project is located.

TOWN OF ROCHESTER, MASSACHUSETTS
OFFICE OF THE TOWN MANAGER
c/o OFFICE OF THE TOWN PLANNER

PROPOSED WATER INFRASTRUCTURE AND ROADWAY IMPROVEMENTS IN THE TOWN OF ROCHESTER, MASSACHUSETTS

PAYMENT BOND

KNOW ALL PERSONS BY THESE PRESENTS: that

_____
(Name of Contractor)

_____
(Address of Contractor)

a _____, hereinafter called PRINCIPAL and (Corporation, Partnership, or Individual)

_____
(Name of Surety)

_____
(Address of Surety)

hereinafter called Surety, are held and firmly bound unto

Town of Rochester
(Name of Owner)

1 Constitution Way, Rochester, MA 02770
(Address of Owner)

hereinafter called Owner, and unto all persons, firms, and corporations who or which may furnish labor, or who furnish materials to perform as described under the contract and to their successors and assigns in the total aggregate penal sum of _____

_____ Dollars ($_____)

in lawful money of the United States, for the payment of which sum well and truly to be made, we bind ourselves, our heirs, executors, administrators, successors, and assigns, jointly and severally, firmly by these presents.

THE CONDITION OF THIS OBLIGATION is such that whereas, the Principal entered into a certain contract with the Owner, dated the ___ day of _____ 20__, a copy of which is hereto attached and made a part hereof for Contract 'CHSGOD Infrastructure Improvements' in Rochester Massachusetts.

NOW, THEREFORE, if the Principal shall promptly make payment to all persons, firms, and corporations furnishing materials for or performing labor in prosecution of the Work provided for in such Contract, and any authorized extensions or modification thereof, including all amounts due for materials, lubricants, oil, gasoline, coal and coke, repairs on machinery, equipment and tools, consumed or used in connection with the construction of such Work, and for all labor cost incurred in such Work including that by a Subcontractor, and to any mechanic or materialman lienholder whether it acquires its lien by operation of State or Federal law; then this obligation shall be void, otherwise to remain in full force and effect.

PROVIDED, that beneficiaries or claimants hereunder shall be limited to the Subcontractors, and persons, firms, and corporations having a direct contract with the Principal or its Subcontractors.

PROVIDED, FURTHER, that the said Surety for value received hereby stipulates and agrees that no change, extension of time, alteration or addition to the terms of the contract or to the Work to be performed thereunder or the Specifications accompanying the same shall in any way affect its obligation on this Bond, and it does hereby waive notice to the terms of this contract or to the Work or to the Specifications.

PROVIDED, FURTHER, that no suit or action shall be commenced hereunder by any claimant: (a) unless claimant, other than one having a direct Contract with the Principal, shall have given written notice to any two of the following: The Principal, the Owner, or the Surety above named within sixty-five (65) days after such claimant did or performed the last of the work or labor, or furnished the last of the materials for which said claim is made, stating with substantial accuracy the amount claimed and the name of the party to whom the materials were furnished, or for whom the work or labor was done or performed. Such notice shall be served by mailing the same by registered mail or certified mail, postage prepaid, in an envelope addressed to the Principal, Owner, or Surety, at any place where an office is regularly maintained for the transaction of business, or served in any manner in which legal process may be served in the state in which the aforesaid project is located, save that such service need not be made by a public officer. (b) After the expiration date of one (1) year following the date of which Principal ceased work on said Contract, it being understood, however, that if any limitation embodied in the Bond is prohibited by any law controlling the construction hereof, such limitation shall be deemed to be amended so as to be equal to the minimum period of limitation permitted by such law.

PROVIDED, FURTHER, that it is expressly agreed that this Bond shall be deemed amended automatically and immediately, without formal and separate amendments hereto, upon amendment to the Contract not increasing the Contract Price more than 20 percent, so as to bind the Principal and the Surety to the full and faithful performance of the Contract as so amended.

The term "Amendment", wherever used in this Bond and whether referring to this Bond, the Contract or the Loan Documents shall include any alteration, addition, extension or modification of any character whatsoever.

PROVIDED, FURTHER, that no final settlement between the Owner and the Contractor shall abridge the right of any beneficiary hereunder, whose claim may be unsatisfied.

WITNESS WHEREOF, this instrument is executed in five (5) counterparts, each of which shall be deemed an original, this

_____ day of _____ 20 ____.

ATTEST:

_____
Principal

_____
(Principal) Secretary

(SEAL)(s)

By_____

_____

_____ _____
(Witness as to Principal)

_____
(Address)

_____ _____
Surety

ATTEST:

_____ _____
(Witness as to Surety) (Attorney-in-Fact)

_____ _____
(Address) (Address)

_____ _____

NOTE: Date of Bond must not be prior to date of Contract.

If Contractor is partnership, all partners should execute Bond.
IMPORTANT: Surety companies executing Bonds must appear on the Treasury Department's most current list (Circular 570 as amended) and be authorized to transact business in the State where the Project is located.

This document has important legal consequences; consultation with an attorney is encouraged with respect to its use or modification. This document should be adapted to the particular circumstances of the contemplated Project and the controlling Laws and Regulations.

STANDARD GENERAL CONDITIONS OF THE CONSTRUCTION CONTRACT

Prepared By

EJCDC®
ENGINEERS JOINT CONTRACT DOCUMENTS COMMITTEE

ACEC
AMERICAN COUNCIL OF ENGINEERING COMPANIES

ASCE
AMERICAN SOCIETY OF CIVIL ENGINEERS

NSPE®
NATIONAL SOCIETY OF PROFESSIONAL ENGINEERS

Endorsed By

CSI®
Building Knowledge
Improving Project Delivery

NUCA
We Dig America

National Society of Professional Engineers

1420 King Street, Alexandria, VA 22314-2794

(703) 684-2882

www.nspe.org

American Council of Engineering Companies

1015 15th Street N.W., Washington, DC 20005

(202) 347-7474

www.acec.org

American Society of Civil Engineers

1801 Alexander Bell Drive, Reston, VA 20191-4400

(800) 548-2723

www.asce.org

NOTE: EJCDC publications may be purchased at www.ejcdc.org, or from any of the sponsoring organizations above.

GUIDELINES FOR USE OF EJCDC® C-700, STANDARD GENERAL CONDITIONS OF THE CONSTRUCTION CONTRACT

1.0 PURPOSE AND INTENDED USE OF THE DOCUMENT

EJCDC® C-700, Standard General Conditions of the Construction Contract (2018), is the foundation document for the EJCDC Construction Series. The General Conditions define the basic rights, responsibilities, risk allocations, and contractual relationship of the Owner and Contractor, and establish how the Contract is to be administered.

2.0 OTHER DOCUMENTS

EJCDC documents are intended to be used as a system and changes in one EJCDC document may require a corresponding change in other documents. Other EJCDC documents may also serve as a reference to provide insight or guidance for the preparation of this document.

These General Conditions have been prepared for use with either EJCDC® C-520, Agreement Between Owner and Contractor for Construction Contract (Stipulated Price), or EJCDC® C-525, Agreement Between Owner and Contractor for Construction Contract (Cost-Plus-Fee) (2018 Editions). The provisions of the General Conditions and the Agreement are interrelated, and a change in one may necessitate a change in the other.

To prepare supplementary conditions that are coordinated with the General Conditions, use EJCDC® C-800, Supplementary Conditions of the Construction Contract (2018).

The full EJCDC Construction series of documents is discussed in the EJCDC® C-001, Commentary on the 2018 EJCDC Construction Documents (2018).

3.0 ORGANIZATION OF INFORMATION

All parties involved in a construction project benefit significantly from a standardized approach in the location of subject matter throughout the documents. Experience confirms the danger of addressing the same subject matter in more than one location; doing so frequently leads to confusion and unanticipated legal consequences. Careful attention should be given to the guidance provided in EJCDC® N-122/AIA® A521, Uniform Location of Subject Matter (2012 Edition) when preparing documents. EJCDC® N-122/AIA® A521 is available at no charge from the EJCDC website, www.ejcdc.org, and from the websites of EJCDC's sponsoring organizations.

If CSI MasterFormat™ is used for organizing the Project Manual, consult CSI MasterFormat™ for the appropriate document number (e.g., under 00 11 00, Advertisements and Invitations), and accordingly number the document and its pages.

4.0 EDITING THIS DOCUMENT

Remove these Guidelines for Use. Some users may also prefer to remove the two cover pages.

Although it is permissible to revise the Standard EJCDC Text of C-700 (the content beginning at page 1 and continuing to the end), it is common practice to leave the Standard EJCDC Text of C-700 intact and unaltered, with modifications and supplementation of C-700's provisions set forth in EJCDC® C-800, Supplementary Conditions of the Construction Contract (2018). If the Standard Text itself is revised, the

user must comply with the terms of the License Agreement, Paragraph 4.0, Document-Specific Provisions, concerning the tracking or highlighting of revisions. The following is a summary of the relevant License Agreement provisions:

1. The term "Standard EJCDC Text" for C-700 refers to all text prepared by EJCDC in the main body of the document. Document covers, logos, footers, instructions, or copyright notices are not Standard EJCDC Text for this purpose.
2. During the drafting or negotiating process for C-700, it is important that the two contracting parties are both aware of any changes that have been made to the Standard EJCDC Text. Thus, if a draft or version of C-700 purports to be or appears to be an EJCDC document, the user must plainly show all changes to the Standard EJCDC Text, using "Track Changes" (redline/strikeout), highlighting, or other means of clearly indicating additions and deletions.
3. If C-700 has been revised or altered and is subsequently presented to third parties (such as potential bidders, grant agencies, lenders, or sureties) as an EJCDC document, then the changes to the Standard EJCDC Text must be shown, or the third parties must receive access to a version that shows the changes.
4. Once the document is ready to be finalized (and if applicable executed by the contracting parties), it is no longer necessary to continue to show changes to the Standard EJCDC Text. The user may produce a final version of the document in a format in which all changes are accepted, and the document at that point does not need to include any "Track Changes," redline/strikeout, highlighting, or other indication of additions and deletions to the Standard EJCDC Text.

5.0 LICENSE AGREEMENT

This document is subject to the terms and conditions of the **License Agreement, 2018 EJCDC® Construction Series Documents**. A copy of the License Agreement was furnished at the time of purchase of this document, and is available for review at www.ejcdc.org and the websites of EJCDC's sponsoring organizations.

STANDARD GENERAL CONDITIONS OF THE CONSTRUCTION CONTRACT

TABLE OF CONTENTS

Page

Article 1—Definitions and Terminology 1
- 1.01 Defined Terms 1
- 1.02 Terminology 6

Article 2—Preliminary Matters 7
- 2.01 Delivery of Performance and Payment Bonds; Evidence of Insurance 7
- 2.02 Copies of Documents 7
- 2.03 Before Starting Construction 8
- 2.04 Preconstruction Conference; Designation of Authorized Representatives 8
- 2.05 Acceptance of Schedules 8
- 2.06 Electronic Transmittals 9

Article 3—Contract Documents: Intent, Requirements, Reuse 9
- 3.01 Intent 9
- 3.02 Reference Standards 10
- 3.03 Reporting and Resolving Discrepancies 10
- 3.04 Requirements of the Contract Documents 11
- 3.05 Reuse of Documents 11

Article 4—Commencement and Progress of the Work 12
- 4.01 Commencement of Contract Times; Notice to Proceed 12
- 4.02 Starting the Work 12
- 4.03 Reference Points 12
- 4.04 Progress Schedule 12
- 4.05 Delays in Contractor's Progress 12

Article 5—Site; Subsurface and Physical Conditions; Hazardous Environmental Conditions 14
- 5.01 Availability of Lands 14
- 5.02 Use of Site and Other Areas 14
- 5.03 Subsurface and Physical Conditions 15
- 5.04 Differing Subsurface or Physical Conditions 16

5.05 Underground Facilities 18
5.06 Hazardous Environmental Conditions at Site 19
Article 6—Bonds and Insurance 22
6.01 Performance, Payment, and Other Bonds 22
6.02 Insurance—General Provisions 22
6.03 Contractor's Insurance 24
6.04 Builder's Risk and Other Property Insurance 25
6.05 Property Losses; Subrogation 26
6.06 Receipt and Application of Property Insurance Proceeds 27
Article 7—Contractor's Responsibilities 27
7.01 Contractor's Means and Methods of Construction 27
7.02 Supervision and Superintendence 28
7.03 Labor; Working Hours 28
7.04 Services, Materials, and Equipment 28
7.05 "Or Equals" 29
7.06 Substitutes 30
7.07 Concerning Subcontractors and Suppliers 31
7.08 Patent Fees and Royalties 32
7.09 Permits 33
7.10 Taxes 33
7.11 Laws and Regulations 33
7.12 Record Documents 34
7.13 Safety and Protection 34
7.14 Hazard Communication Programs 35
7.15 Emergencies 35
7.16 Submittals 36
7.17 Contractor's General Warranty and Guarantee 38
7.18 Indemnification 39
7.19 Delegation of Professional Design Services 40
Article 8—Other Work at the Site 41
8.01 Other Work 41
8.02 Coordination 41
8.03 Legal Relationships 42

Article 9—Owner's Responsibilities 43
9.01 Communications to Contractor 43
9.02 Replacement of Engineer 43
9.03 Furnish Data 43
9.04 Pay When Due 43
9.05 Lands and Easements; Reports, Tests, and Drawings 43
9.06 Insurance 43
9.07 Change Orders 43
9.08 Inspections, Tests, and Approvals 44
9.09 Limitations on Owner's Responsibilities 44
9.10 Undisclosed Hazardous Environmental Condition 44
9.11 Evidence of Financial Arrangements 44
9.12 Safety Programs 44
Article 10—Engineer's Status During Construction 44
10.01 Owner's Representative 44
10.02 Visits to Site 44
10.03 Resident Project Representative 45
10.04 Engineer's Authority 45
10.05 Determinations for Unit Price Work 45
10.06 Decisions on Requirements of Contract Documents and Acceptability of Work 45
10.07 Limitations on Engineer's Authority and Responsibilities 45
10.08 Compliance with Safety Program 46
Article 11—Changes to the Contract 46
11.01 Amending and Supplementing the Contract 46
11.02 Change Orders 46
11.03 Work Change Directives 47
11.04 Field Orders 47
11.05 Owner-Authorized Changes in the Work 47
11.06 Unauthorized Changes in the Work 48
11.07 Change of Contract Price 48
11.08 Change of Contract Times 49
11.09 Change Proposals 49
11.10 Notification to Surety 51

Article 12—Claims 51
12.01 Claims 51
Article 13—Cost of the Work; Allowances; Unit Price Work 52
13.01 Cost of the Work 52
13.02 Allowances 56
13.03 Unit Price Work 56
Article 14—Tests and Inspections; Correction, Removal, or Acceptance of Defective Work 57
14.01 Access to Work 57
14.02 Tests, Inspections, and Approvals 57
14.03 Defective Work 58
14.04 Acceptance of Defective Work 58
14.05 Uncovering Work 59
14.06 Owner May Stop the Work 59
14.07 Owner May Correct Defective Work 59
Article 15—Payments to Contractor; Set-Offs; Completion; Correction Period 60
15.01 Progress Payments 60
15.02 Contractor's Warranty of Title 63
15.03 Substantial Completion 63
15.04 Partial Use or Occupancy 64
15.05 Final Inspection 65
15.06 Final Payment 65
15.07 Waiver of Claims 66
15.08 Correction Period 67
Article 16—Suspension of Work and Termination 68
16.01 Owner May Suspend Work 68
16.02 Owner May Terminate for Cause 68
16.03 Owner May Terminate for Convenience 69
16.04 Contractor May Stop Work or Terminate 69
Article 17—Final Resolution of Disputes 70
17.01 Methods and Procedures 70
Article 18—Miscellaneous 70
18.01 Giving Notice 70
18.02 Computation of Times 70

18.03 Cumulative Remedies 70
18.04 Limitation of Damages 71
18.05 No Waiver 71
18.06 Survival of Obligations 71
18.07 Controlling Law 71
18.08 Assignment of Contract 71
18.09 Successors and Assigns 71
18.10 Headings 71

STANDARD GENERAL CONDITIONS OF THE CONSTRUCTION CONTRACT

ARTICLE 1—DEFINITIONS AND TERMINOLOGY

1.01 *Defined Terms*

A. Wherever used in the Bidding Requirements or Contract Documents, a term printed with initial capital letters, including the term's singular and plural forms, will have the meaning indicated in the definitions below. In addition to terms specifically defined, terms with initial capital letters in the Contract Documents include references to identified articles and paragraphs, and the titles of other documents or forms.

1. *Addenda*—Written or graphic instruments issued prior to the opening of Bids which clarify, correct, or change the Bidding Requirements or the proposed Contract Documents.

2. *Agreement*—The written instrument, executed by Owner and Contractor, that sets forth the Contract Price and Contract Times, identifies the parties and the Engineer, and designates the specific items that are Contract Documents.

3. *Application for Payment*—The document prepared by Contractor, in a form acceptable to Engineer, to request progress or final payments, and which is to be accompanied by such supporting documentation as is required by the Contract Documents.

4. *Bid*—The offer of a Bidder submitted on the prescribed form setting forth the prices for the Work to be performed.

5. *Bidder*—An individual or entity that submits a Bid to Owner.

6. *Bidding Documents*—The Bidding Requirements, the proposed Contract Documents, and all Addenda.

7. *Bidding Requirements*—The Advertisement or invitation to bid, Instructions to Bidders, Bid Bond or other Bid security, if any, the Bid Form, and the Bid with any attachments.

8. *Change Order*—A document which is signed by Contractor and Owner and authorizes an addition, deletion, or revision in the Work or an adjustment in the Contract Price or the Contract Times, or other revision to the Contract, issued on or after the Effective Date of the Contract.

9. *Change Proposal*—A written request by Contractor, duly submitted in compliance with the procedural requirements set forth herein, seeking an adjustment in Contract Price or Contract Times; contesting an initial decision by Engineer concerning the requirements of the Contract Documents or the acceptability of Work under the Contract Documents; challenging a set-off against payments due; or seeking other relief with respect to the terms of the Contract.

10. *Claim*

a. A demand or assertion by Owner directly to Contractor, duly submitted in compliance with the procedural requirements set forth herein, seeking an adjustment of Contract Price or Contract Times; contesting an initial decision by

Engineer concerning the requirements of the Contract Documents or the acceptability of Work under the Contract Documents; contesting Engineer's decision regarding a Change Proposal; seeking resolution of a contractual issue that Engineer has declined to address; or seeking other relief with respect to the terms of the Contract.

b. A demand or assertion by Contractor directly to Owner, duly submitted in compliance with the procedural requirements set forth herein, contesting Engineer's decision regarding a Change Proposal, or seeking resolution of a contractual issue that Engineer has declined to address.

c. A demand or assertion by Owner or Contractor, duly submitted in compliance with the procedural requirements set forth herein, made pursuant to Paragraph 12.01.A.4, concerning disputes arising after Engineer has issued a recommendation of final payment.

d. A demand for money or services by a third party is not a Claim.

11. Constituent of Concern—Asbestos, petroleum, radioactive materials, polychlorinated biphenyls (PCBs), lead-based paint (as defined by the HUD/EPA standard), hazardous waste, and any substance, product, waste, or other material of any nature whatsoever that is or becomes listed, regulated, or addressed pursuant to Laws and Regulations regulating, relating to, or imposing liability or standards of conduct concerning, any hazardous, toxic, or dangerous waste, substance, or material.

12. *Contract*—The entire and integrated written contract between Owner and Contractor concerning the Work.

13. *Contract Documents*—Those items so designated in the Agreement, and which together comprise the Contract.

14. *Contract Price*—The money that Owner has agreed to pay Contractor for completion of the Work in accordance with the Contract Documents.

15. *Contract Times*—The number of days or the dates by which Contractor shall: (a) achieve Milestones, if any; (b) achieve Substantial Completion; and (c) complete the Work.

16. *Contractor*—The individual or entity with which Owner has contracted for performance of the Work.

17. *Cost of the Work*—See Paragraph 13.01 for definition.

18. *Drawings*—The part of the Contract that graphically shows the scope, extent, and character of the Work to be performed by Contractor.

19. *Effective Date of the Contract*—The date, indicated in the Agreement, on which the Contract becomes effective.

20. *Electronic Document*—Any Project-related correspondence, attachments to correspondence, data, documents, drawings, information, or graphics, including but not limited to Shop Drawings and other Submittals, that are in an electronic or digital format.

21. *Electronic Means*—Electronic mail (email), upload/download from a secure Project website, or other communications methods that allow: (a) the transmission or

communication of Electronic Documents; (b) the documentation of transmissions, including sending and receipt; (c) printing of the transmitted Electronic Document by the recipient; (d) the storage and archiving of the Electronic Document by sender and recipient; and (e) the use by recipient of the Electronic Document for purposes permitted by this Contract. Electronic Means does not include the use of text messaging, or of Facebook, Twitter, Instagram, or similar social media services for transmission of Electronic Documents.

22. *Engineer*—The individual or entity named as such in the Agreement.

23. *Field Order*—A written order issued by Engineer which requires minor changes in the Work but does not change the Contract Price or the Contract Times.

24. *Hazardous Environmental Condition*—The presence at the Site of Constituents of Concern in such quantities or circumstances that may present a danger to persons or property exposed thereto.

    a. The presence at the Site of materials that are necessary for the execution of the Work, or that are to be incorporated into the Work, and that are controlled and contained pursuant to industry practices, Laws and Regulations, and the requirements of the Contract, is not a Hazardous Environmental Condition.

    b. The presence of Constituents of Concern that are to be removed or remediated as part of the Work is not a Hazardous Environmental Condition.

    c. The presence of Constituents of Concern as part of the routine, anticipated, and obvious working conditions at the Site, is not a Hazardous Environmental Condition.

25. *Laws and Regulations; Laws or Regulations*—Any and all applicable laws, statutes, rules, regulations, ordinances, codes, and binding decrees, resolutions, and orders of any and all governmental bodies, agencies, authorities, and courts having jurisdiction.

26. *Liens*—Charges, security interests, or encumbrances upon Contract-related funds, real property, or personal property.

27. *Milestone*—A principal event in the performance of the Work that the Contract requires Contractor to achieve by an intermediate completion date, or by a time prior to Substantial Completion of all the Work.

28. *Notice of Award*—The written notice by Owner to a Bidder of Owner's acceptance of the Bid.

29. *Notice to Proceed*—A written notice by Owner to Contractor fixing the date on which the Contract Times will commence to run and on which Contractor shall start to perform the Work.

30. *Owner*—The individual or entity with which Contractor has contracted regarding the Work, and which has agreed to pay Contractor for the performance of the Work, pursuant to the terms of the Contract.

31. *Progress Schedule*—A schedule, prepared and maintained by Contractor, describing the sequence and duration of the activities comprising Contractor's plan to accomplish the Work within the Contract Times.

32. *Project*—The total undertaking to be accomplished for Owner by engineers, contractors, and others, including planning, study, design, construction, testing, commissioning, and start-up, and of which the Work to be performed under the Contract Documents is a part.

33. *Resident Project Representative*—The authorized representative of Engineer assigned to assist Engineer at the Site. As used herein, the term Resident Project Representative (RPR) includes any assistants or field staff of Resident Project Representative.

34. *Samples*—Physical examples of materials, equipment, or workmanship that are representative of some portion of the Work and that establish the standards by which such portion of the Work will be judged.

35. *Schedule of Submittals*—A schedule, prepared and maintained by Contractor, of required submittals and the time requirements for Engineer's review of the submittals.

36. *Schedule of Values*—A schedule, prepared and maintained by Contractor, allocating portions of the Contract Price to various portions of the Work and used as the basis for reviewing Contractor's Applications for Payment.

37. *Shop Drawings*—All drawings, diagrams, illustrations, schedules, and other data or information that are specifically prepared or assembled by or for Contractor and submitted by Contractor to illustrate some portion of the Work. Shop Drawings, whether approved or not, are not Drawings and are not Contract Documents.

38. *Site*—Lands or areas indicated in the Contract Documents as being furnished by Owner upon which the Work is to be performed, including rights-of-way and easements, and such other lands or areas furnished by Owner which are designated for the use of Contractor.

39. *Specifications*—The part of the Contract that consists of written requirements for materials, equipment, systems, standards, and workmanship as applied to the Work, and certain administrative requirements and procedural matters applicable to the Work.

40. *Subcontractor*—An individual or entity having a direct contract with Contractor or with any other Subcontractor for the performance of a part of the Work.

41. *Submittal*—A written or graphic document, prepared by or for Contractor, which the Contract Documents require Contractor to submit to Engineer, or that is indicated as a Submittal in the Schedule of Submittals accepted by Engineer. Submittals may include Shop Drawings and Samples; schedules; product data; Owner-delegated designs; sustainable design information; information on special procedures; testing plans; results of tests and evaluations, source quality-control testing and inspections, and field or Site quality-control testing and inspections; warranties and certifications; Suppliers' instructions and reports; records of delivery of spare parts and tools; operations and maintenance data; Project photographic documentation; record documents; and other such documents required by the Contract Documents. Submittals, whether or not approved or accepted by Engineer, are not Contract Documents. Change Proposals, Change Orders, Claims, notices, Applications for Payment, and requests for interpretation or clarification are not Submittals.

42. *Substantial Completion*—The time at which the Work (or a specified part thereof) has progressed to the point where, in the opinion of Engineer, the Work (or a specified part

thereof) is sufficiently complete, in accordance with the Contract Documents, so that the Work (or a specified part thereof) can be utilized for the purposes for which it is intended. The terms "substantially complete" and "substantially completed" as applied to all or part of the Work refer to Substantial Completion of such Work.

43. *Successful Bidder*—The Bidder to which the Owner makes an award of contract.

44. *Supplementary Conditions*—The part of the Contract that amends or supplements these General Conditions.

45. *Supplier*—A manufacturer, fabricator, supplier, distributor, or vendor having a direct contract with Contractor or with any Subcontractor to furnish materials or equipment to be incorporated in the Work by Contractor or a Subcontractor.

46. *Technical Data*

    a. Those items expressly identified as Technical Data in the Supplementary Conditions, with respect to either (1) existing subsurface conditions at or adjacent to the Site, or existing physical conditions at or adjacent to the Site including existing surface or subsurface structures (except Underground Facilities) or (2) Hazardous Environmental Conditions at the Site.

    b. If no such express identifications of Technical Data have been made with respect to conditions at the Site, then Technical Data is defined, with respect to conditions at the Site under Paragraphs 5.03, 5.04, and 5.06, as the data contained in boring logs, recorded measurements of subsurface water levels, assessments of the condition of subsurface facilities, laboratory test results, and other factual, objective information regarding conditions at the Site that are set forth in any geotechnical, environmental, or other Site or facilities conditions report prepared for the Project and made available to Contractor.

    c. Information and data regarding the presence or location of Underground Facilities are not intended to be categorized, identified, or defined as Technical Data, and instead Underground Facilities are shown or indicated on the Drawings.

47. *Underground Facilities*—All active or not-in-service underground lines, pipelines, conduits, ducts, encasements, cables, wires, manholes, vaults, tanks, tunnels, or other such facilities or systems at the Site, including but not limited to those facilities or systems that produce, transmit, distribute, or convey telephone or other communications, cable television, fiber optic transmissions, power, electricity, light, heat, gases, oil, crude oil products, liquid petroleum products, water, steam, waste, wastewater, storm water, other liquids or chemicals, or traffic or other control systems. An abandoned facility or system is not an Underground Facility.

48. *Unit Price Work*—Work to be paid for on the basis of unit prices.

49. *Work*—The entire construction or the various separately identifiable parts thereof required to be provided under the Contract Documents. Work includes and is the result of performing or providing all labor, services, and documentation necessary to produce such construction; furnishing, installing, and incorporating all materials and equipment into such construction; and may include related services such as testing, start-up, and commissioning, all as required by the Contract Documents.

50. *Work Change Directive*—A written directive to Contractor issued on or after the Effective Date of the Contract, signed by Owner and recommended by Engineer, ordering an addition, deletion, or revision in the Work.

1.02 *Terminology*

A. The words and terms discussed in Paragraphs 1.02.B, C, D, and E are not defined terms that require initial capital letters, but, when used in the Bidding Requirements or Contract Documents, have the indicated meaning.

B. *Intent of Certain Terms or Adjectives*: The Contract Documents include the terms "as allowed," "as approved," "as ordered," "as directed" or terms of like effect or import to authorize an exercise of professional judgment by Engineer. In addition, the adjectives "reasonable," "suitable," "acceptable," "proper," "satisfactory," or adjectives of like effect or import are used to describe an action or determination of Engineer as to the Work. It is intended that such exercise of professional judgment, action, or determination will be solely to evaluate, in general, the Work for compliance with the information in the Contract Documents and with the design concept of the Project as a functioning whole as shown or indicated in the Contract Documents (unless there is a specific statement indicating otherwise). The use of any such term or adjective is not intended to and shall not be effective to assign to Engineer any duty or authority to supervise or direct the performance of the Work, or any duty or authority to undertake responsibility contrary to the provisions of Article 10 or any other provision of the Contract Documents.

C. *Day*: The word "day" means a calendar day of 24 hours measured from midnight to the next midnight.

D. *Defective*: The word "defective," when modifying the word "Work," refers to Work that is unsatisfactory, faulty, or deficient in that it:

1. does not conform to the Contract Documents;

2. does not meet the requirements of any applicable inspection, reference standard, test, or approval referred to in the Contract Documents; or

3. has been damaged prior to Engineer's recommendation of final payment (unless responsibility for the protection thereof has been assumed by Owner at Substantial Completion in accordance with Paragraph 15.03 or Paragraph 15.04).

E. *Furnish, Install, Perform, Provide*

1. The word "furnish," when used in connection with services, materials, or equipment, means to supply and deliver said services, materials, or equipment to the Site (or some other specified location) ready for use or installation and in usable or operable condition.

2. The word "install," when used in connection with services, materials, or equipment, means to put into use or place in final position said services, materials, or equipment complete and ready for intended use.

3. The words "perform" or "provide," when used in connection with services, materials, or equipment, means to furnish and install said services, materials, or equipment complete and ready for intended use.

4. If the Contract Documents establish an obligation of Contractor with respect to specific services, materials, or equipment, but do not expressly use any of the four words "furnish," "install," "perform," or "provide," then Contractor shall furnish and install said services, materials, or equipment complete and ready for intended use.

F. *Contract Price or Contract Times*: References to a change in "Contract Price or Contract Times" or "Contract Times or Contract Price" or similar, indicate that such change applies to (1) Contract Price, (2) Contract Times, or (3) both Contract Price and Contract Times, as warranted, even if the term "or both" is not expressed.

G. Unless stated otherwise in the Contract Documents, words or phrases that have a well-known technical or construction industry or trade meaning are used in the Contract Documents in accordance with such recognized meaning.

ARTICLE 2—PRELIMINARY MATTERS

2.01 *Delivery of Performance and Payment Bonds; Evidence of Insurance*

A. *Performance and Payment Bonds*: When Contractor delivers the signed counterparts of the Agreement to Owner, Contractor shall also deliver to Owner the performance bond and payment bond (if the Contract requires Contractor to furnish such bonds).

B. *Evidence of Contractor's Insurance*: When Contractor delivers the signed counterparts of the Agreement to Owner, Contractor shall also deliver to Owner, with copies to each additional insured (as identified in the Contract), the certificates, endorsements, and other evidence of insurance required to be provided by Contractor in accordance with Article 6, except to the extent the Supplementary Conditions expressly establish other dates for delivery of specific insurance policies.

C. *Evidence of Owner's Insurance*: After receipt of the signed counterparts of the Agreement and all required bonds and insurance documentation, Owner shall promptly deliver to Contractor, with copies to each additional insured (as identified in the Contract), the certificates and other evidence of insurance required to be provided by Owner under Article 6.

2.02 *Copies of Documents*

A. Owner shall furnish to Contractor four printed copies of the Contract (including one fully signed counterpart of the Agreement), and one copy in electronic portable document format (PDF). Additional printed copies will be furnished upon request at the cost of reproduction.

B. Owner shall maintain and safeguard at least one original printed record version of the Contract, including Drawings and Specifications signed and sealed by Engineer and other design professionals. Owner shall make such original printed record version of the Contract available to Contractor for review. Owner may delegate the responsibilities under this provision to Engineer.

2.03 *Before Starting Construction*

A. *Preliminary Schedules*: Within 10 days after the Effective Date of the Contract (or as otherwise required by the Contract Documents), Contractor shall submit to Engineer for timely review:

1. a preliminary Progress Schedule indicating the times (numbers of days or dates) for starting and completing the various stages of the Work, including any Milestones specified in the Contract;

2. a preliminary Schedule of Submittals; and

3. a preliminary Schedule of Values for all of the Work which includes quantities and prices of items which when added together equal the Contract Price and subdivides the Work into component parts in sufficient detail to serve as the basis for progress payments during performance of the Work. Such prices will include an appropriate amount of overhead and profit applicable to each item of Work.

2.04 *Preconstruction Conference; Designation of Authorized Representatives*

A. Before any Work at the Site is started, a conference attended by Owner, Contractor, Engineer, and others as appropriate will be held to establish a working understanding among the parties as to the Work, and to discuss the schedules referred to in Paragraph 2.03.A, procedures for handling Shop Drawings, Samples, and other Submittals, processing Applications for Payment, electronic or digital transmittals, and maintaining required records.

B. At this conference Owner and Contractor each shall designate, in writing, a specific individual to act as its authorized representative with respect to the services and responsibilities under the Contract. Such individuals shall have the authority to transmit and receive information, render decisions relative to the Contract, and otherwise act on behalf of each respective party.

2.05 *Acceptance of Schedules*

A. At least 10 days before submission of the first Application for Payment a conference, attended by Contractor, Engineer, and others as appropriate, will be held to review the schedules submitted in accordance with Paragraph 2.03.A. No progress payment will be made to Contractor until acceptable schedules are submitted to Engineer.

1. The Progress Schedule will be acceptable to Engineer if it provides an orderly progression of the Work to completion within the Contract Times. Such acceptance will not impose on Engineer responsibility for the Progress Schedule, for sequencing, scheduling, or progress of the Work, nor interfere with or relieve Contractor from Contractor's full responsibility therefor.

2. Contractor's Schedule of Submittals will be acceptable to Engineer if it provides a workable arrangement for reviewing and processing the required submittals.

3. Contractor's Schedule of Values will be acceptable to Engineer as to form and substance if it provides a reasonable allocation of the Contract Price to the component parts of the Work.

4. If a schedule is not acceptable, Contractor will have an additional 10 days to revise and resubmit the schedule.

2.06 *Electronic Transmittals*

A. Except as otherwise stated elsewhere in the Contract, the Owner, Engineer, and Contractor may send, and shall accept, Electronic Documents transmitted by Electronic Means.

B. If the Contract does not establish protocols for Electronic Means, then Owner, Engineer, and Contractor shall jointly develop such protocols.

C. Subject to any governing protocols for Electronic Means, when transmitting Electronic Documents by Electronic Means, the transmitting party makes no representations as to long-term compatibility, usability, or readability of the Electronic Documents resulting from the recipient's use of software application packages, operating systems, or computer hardware differing from those used in the drafting or transmittal of the Electronic Documents.

ARTICLE 3—CONTRACT DOCUMENTS: INTENT, REQUIREMENTS, REUSE

3.01 *Intent*

A. The Contract Documents are complementary; what is required by one Contract Document is as binding as if required by all.

B. It is the intent of the Contract Documents to describe a functionally complete Project (or part thereof) to be constructed in accordance with the Contract Documents.

C. Unless otherwise stated in the Contract Documents, if there is a discrepancy between the electronic versions of the Contract Documents (including any printed copies derived from such electronic versions) and the printed record version, the printed record version will govern.

D. The Contract supersedes prior negotiations, representations, and agreements, whether written or oral.

E. Engineer will issue clarifications and interpretations of the Contract Documents as provided herein.

F. Any provision or part of the Contract Documents held to be void or unenforceable under any Law or Regulation will be deemed stricken, and all remaining provisions will continue to be valid and binding upon Owner and Contractor, which agree that the Contract Documents will be reformed to replace such stricken provision or part thereof with a valid and enforceable provision that comes as close as possible to expressing the intention of the stricken provision.

G. Nothing in the Contract Documents creates:

1. any contractual relationship between Owner or Engineer and any Subcontractor, Supplier, or other individual or entity performing or furnishing any of the Work, for the benefit of such Subcontractor, Supplier, or other individual or entity; or

2. any obligation on the part of Owner or Engineer to pay or to see to the payment of any money due any such Subcontractor, Supplier, or other individual or entity, except as may otherwise be required by Laws and Regulations.

3.02 *Reference Standards*

A. *Standards Specifications, Codes, Laws and Regulations*

1. Reference in the Contract Documents to standard specifications, manuals, reference standards, or codes of any technical society, organization, or association, or to Laws or Regulations, whether such reference be specific or by implication, means the standard specification, manual, reference standard, code, or Laws or Regulations in effect at the time of opening of Bids (or on the Effective Date of the Contract if there were no Bids), except as may be otherwise specifically stated in the Contract Documents.

2. No provision of any such standard specification, manual, reference standard, or code, and no instruction of a Supplier, will be effective to change the duties or responsibilities of Owner, Contractor, or Engineer from those set forth in the part of the Contract Documents prepared by or for Engineer. No such provision or instruction shall be effective to assign to Owner or Engineer any duty or authority to supervise or direct the performance of the Work, or any duty or authority to undertake responsibility inconsistent with the provisions of the part of the Contract Documents prepared by or for Engineer.

3.03 *Reporting and Resolving Discrepancies*

A. *Reporting Discrepancies*

1. *Contractor's Verification of Figures and Field Measurements*: Before undertaking each part of the Work, Contractor shall carefully study the Contract Documents, and check and verify pertinent figures and dimensions therein, particularly with respect to applicable field measurements. Contractor shall promptly report in writing to Engineer any conflict, error, ambiguity, or discrepancy that Contractor discovers, or has actual knowledge of, and shall not proceed with any Work affected thereby until the conflict, error, ambiguity, or discrepancy is resolved by a clarification or interpretation by Engineer, or by an amendment or supplement to the Contract issued pursuant to Paragraph 11.01.

2. *Contractor's Review of Contract Documents*: If, before or during the performance of the Work, Contractor discovers any conflict, error, ambiguity, or discrepancy within the Contract Documents, or between the Contract Documents and (a) any applicable Law or Regulation, (b) actual field conditions, (c) any standard specification, manual, reference standard, or code, or (d) any instruction of any Supplier, then Contractor shall promptly report it to Engineer in writing. Contractor shall not proceed with the Work affected thereby (except in an emergency as required by Paragraph 7.15) until the conflict, error, ambiguity, or discrepancy is resolved, by a clarification or interpretation by Engineer, or by an amendment or supplement to the Contract issued pursuant to Paragraph 11.01.

3. Contractor shall not be liable to Owner or Engineer for failure to report any conflict, error, ambiguity, or discrepancy in the Contract Documents unless Contractor had actual knowledge thereof.

B. *Resolving Discrepancies*

1. Except as may be otherwise specifically stated in the Contract Documents, the provisions of the part of the Contract Documents prepared by or for Engineer take

precedence in resolving any conflict, error, ambiguity, or discrepancy between such provisions of the Contract Documents and:

a. the provisions of any standard specification, manual, reference standard, or code, or the instruction of any Supplier (whether or not specifically incorporated by reference as a Contract Document); or

b. the provisions of any Laws or Regulations applicable to the performance of the Work (unless such an interpretation of the provisions of the Contract Documents would result in violation of such Law or Regulation).

3.04 *Requirements of the Contract Documents*

A. During the performance of the Work and until final payment, Contractor and Owner shall submit to the Engineer in writing all matters in question concerning the requirements of the Contract Documents (sometimes referred to as requests for information or interpretation—RFIs), or relating to the acceptability of the Work under the Contract Documents, as soon as possible after such matters arise. Engineer will be the initial interpreter of the requirements of the Contract Documents, and judge of the acceptability of the Work.

B. Engineer will, with reasonable promptness, render a written clarification, interpretation, or decision on the issue submitted, or initiate an amendment or supplement to the Contract Documents. Engineer's written clarification, interpretation, or decision will be final and binding on Contractor, unless it appeals by submitting a Change Proposal, and on Owner, unless it appeals by filing a Claim.

C. If a submitted matter in question concerns terms and conditions of the Contract Documents that do not involve (1) the performance or acceptability of the Work under the Contract Documents, (2) the design (as set forth in the Drawings, Specifications, or otherwise), or (3) other engineering or technical matters, then Engineer will promptly notify Owner and Contractor in writing that Engineer is unable to provide a decision or interpretation. If Owner and Contractor are unable to agree on resolution of such a matter in question, either party may pursue resolution as provided in Article 12.

3.05 *Reuse of Documents*

A. Contractor and its Subcontractors and Suppliers shall not:

1. have or acquire any title to or ownership rights in any of the Drawings, Specifications, or other documents (or copies of any thereof) prepared by or bearing the seal of Engineer or its consultants, including electronic media versions, or reuse any such Drawings, Specifications, other documents, or copies thereof on extensions of the Project or any other project without written consent of Owner and Engineer and specific written verification or adaptation by Engineer; or

2. have or acquire any title or ownership rights in any other Contract Documents, reuse any such Contract Documents for any purpose without Owner's express written consent, or violate any copyrights pertaining to such Contract Documents.

B. The prohibitions of this Paragraph 3.05 will survive final payment, or termination of the Contract. Nothing herein precludes Contractor from retaining copies of the Contract Documents for record purposes.

ARTICLE 4—COMMENCEMENT AND PROGRESS OF THE WORK

4.01 *Commencement of Contract Times; Notice to Proceed*

A. The Contract Times will commence to run on the 30th day after the Effective Date of the Contract or, if a Notice to Proceed is given, on the day indicated in the Notice to Proceed. A Notice to Proceed may be given at any time within 30 days after the Effective Date of the Contract. In no event will the Contract Times commence to run later than the 60th day after the day of Bid opening or the 30th day after the Effective Date of the Contract, whichever date is earlier.

4.02 *Starting the Work*

A. Contractor shall start to perform the Work on the date when the Contract Times commence to run. No Work may be done at the Site prior to such date.

4.03 *Reference Points*

A. Owner shall provide engineering surveys to establish reference points for construction which in Engineer's judgment are necessary to enable Contractor to proceed with the Work. Contractor shall be responsible for laying out the Work, shall protect and preserve the established reference points and property monuments, and shall make no changes or relocations without the prior written approval of Owner. Contractor shall report to Engineer whenever any reference point or property monument is lost or destroyed or requires relocation because of necessary changes in grades or locations, and shall be responsible for the accurate replacement or relocation of such reference points or property monuments by professionally qualified personnel.

4.04 *Progress Schedule*

A. Contractor shall adhere to the Progress Schedule established in accordance with Paragraph 2.05 as it may be adjusted from time to time as provided below.

1. Contractor shall submit to Engineer for acceptance (to the extent indicated in Paragraph 2.05) proposed adjustments in the Progress Schedule that will not result in changing the Contract Times.

2. Proposed adjustments in the Progress Schedule that will change the Contract Times must be submitted in accordance with the requirements of Article 11.

B. Contractor shall carry on the Work and adhere to the Progress Schedule during all disputes or disagreements with Owner. No Work will be delayed or postponed pending resolution of any disputes or disagreements, or during any appeal process, except as permitted by Paragraph 16.04, or as Owner and Contractor may otherwise agree in writing.

4.05 *Delays in Contractor's Progress*

A. If Owner, Engineer, or anyone for whom Owner is responsible, delays, disrupts, or interferes with the performance or progress of the Work, then Contractor shall be entitled to an equitable adjustment in Contract Price or Contract Times.

B. Contractor shall not be entitled to an adjustment in Contract Price or Contract Times for delay, disruption, or interference caused by or within the control of Contractor. Delay, disruption, and interference attributable to and within the control of a Subcontractor or Supplier shall be deemed to be within the control of Contractor.

C. If Contractor's performance or progress is delayed, disrupted, or interfered with by unanticipated causes not the fault of and beyond the control of Owner, Contractor, and those for which they are responsible, then Contractor shall be entitled to an equitable adjustment in Contract Times. Such an adjustment will be Contractor's sole and exclusive remedy for the delays, disruption, and interference described in this paragraph. Causes of delay, disruption, or interference that may give rise to an adjustment in Contract Times under this paragraph include but are not limited to the following:

1. Severe and unavoidable natural catastrophes such as fires, floods, epidemics, and earthquakes;
2. Abnormal weather conditions;
3. Acts or failures to act of third-party utility owners or other third-party entities (other than those third-party utility owners or other third-party entities performing other work at or adjacent to the Site as arranged by or under contract with Owner, as contemplated in Article 8); and
4. Acts of war or terrorism.

D. Contractor's entitlement to an adjustment of Contract Times or Contract Price is limited as follows:

1. Contractor's entitlement to an adjustment of the Contract Times is conditioned on the delay, disruption, or interference adversely affecting an activity on the critical path to completion of the Work, as of the time of the delay, disruption, or interference.
2. Contractor shall not be entitled to an adjustment in Contract Price for any delay, disruption, or interference if such delay is concurrent with a delay, disruption, or interference caused by or within the control of Contractor. Such a concurrent delay by Contractor shall not preclude an adjustment of Contract Times to which Contractor is otherwise entitled.
3. Adjustments of Contract Times or Contract Price are subject to the provisions of Article 11.

E. Each Contractor request or Change Proposal seeking an increase in Contract Times or Contract Price must be supplemented by supporting data that sets forth in detail the following:

1. The circumstances that form the basis for the requested adjustment;
2. The date upon which each cause of delay, disruption, or interference began to affect the progress of the Work;
3. The date upon which each cause of delay, disruption, or interference ceased to affect the progress of the Work;
4. The number of days' increase in Contract Times claimed as a consequence of each such cause of delay, disruption, or interference; and
5. The impact on Contract Price, in accordance with the provisions of Paragraph 11.07.

Contractor shall also furnish such additional supporting documentation as Owner or Engineer may require including, where appropriate, a revised progress schedule indicating all the activities affected by the delay, disruption, or interference, and an explanation of the

effect of the delay, disruption, or interference on the critical path to completion of the Work.

F. Delays, disruption, and interference to the performance or progress of the Work resulting from the existence of a differing subsurface or physical condition, an Underground Facility that was not shown or indicated by the Contract Documents, or not shown or indicated with reasonable accuracy, and those resulting from Hazardous Environmental Conditions, are governed by Article 5, together with the provisions of Paragraphs 4.05.D and 4.05.E.

G. Paragraph 8.03 addresses delays, disruption, and interference to the performance or progress of the Work resulting from the performance of certain other work at or adjacent to the Site.

ARTICLE 5—SITE; SUBSURFACE AND PHYSICAL CONDITIONS; HAZARDOUS ENVIRONMENTAL CONDITIONS

5.01 *Availability of Lands*

A. Owner shall furnish the Site. Owner shall notify Contractor in writing of any encumbrances or restrictions not of general application but specifically related to use of the Site with which Contractor must comply in performing the Work.

B. Upon reasonable written request, Owner shall furnish Contractor with a current statement of record legal title and legal description of the lands upon which permanent improvements are to be made and Owner's interest therein as necessary for giving notice of or filing a mechanic's or construction lien against such lands in accordance with applicable Laws and Regulations.

C. Contractor shall provide for all additional lands and access thereto that may be required for temporary construction facilities or storage of materials and equipment.

5.02 *Use of Site and Other Areas*

A. *Limitation on Use of Site and Other Areas*

1. Contractor shall confine construction equipment, temporary construction facilities, the storage of materials and equipment, and the operations of workers to the Site, adjacent areas that Contractor has arranged to use through construction easements or otherwise, and other adjacent areas permitted by Laws and Regulations, and shall not unreasonably encumber the Site and such other adjacent areas with construction equipment or other materials or equipment. Contractor shall assume full responsibility for (a) damage to the Site; (b) damage to any such other adjacent areas used for Contractor's operations; (c) damage to any other adjacent land or areas, or to improvements, structures, utilities, or similar facilities located at such adjacent lands or areas; and (d) for injuries and losses sustained by the owners or occupants of any such land or areas; provided that such damage or injuries result from the performance of the Work or from other actions or conduct of the Contractor or those for which Contractor is responsible.

2. If a damage or injury claim is made by the owner or occupant of any such land or area because of the performance of the Work, or because of other actions or conduct of the Contractor or those for which Contractor is responsible, Contractor shall (a) take immediate corrective or remedial action as required by Paragraph 7.13, or otherwise;

(b) promptly attempt to settle the claim as to all parties through negotiations with such owner or occupant, or otherwise resolve the claim by arbitration or other dispute resolution proceeding, or in a court of competent jurisdiction; and (c) to the fullest extent permitted by Laws and Regulations, indemnify and hold harmless Owner and Engineer, and the officers, directors, members, partners, employees, agents, consultants and subcontractors of each and any of them, from and against any such claim, and against all costs, losses, and damages (including but not limited to all fees and charges of engineers, architects, attorneys, and other professionals and all court or arbitration or other dispute resolution costs) arising out of or relating to any claim or action, legal or equitable, brought by any such owner or occupant against Owner, Engineer, or any other party indemnified hereunder to the extent caused directly or indirectly, in whole or in part by, or based upon, Contractor's performance of the Work, or because of other actions or conduct of the Contractor or those for which Contractor is responsible.

B. *Removal of Debris During Performance of the Work*: During the progress of the Work the Contractor shall keep the Site and other adjacent areas free from accumulations of waste materials, rubbish, and other debris. Removal and disposal of such waste materials, rubbish, and other debris will conform to applicable Laws and Regulations.

C. *Cleaning*: Prior to Substantial Completion of the Work Contractor shall clean the Site and the Work and make it ready for utilization by Owner. At the completion of the Work Contractor shall remove from the Site and adjacent areas all tools, appliances, construction equipment and machinery, and surplus materials and shall restore to original condition all property not designated for alteration by the Contract Documents.

D. *Loading of Structures*: Contractor shall not load nor permit any part of any structure to be loaded in any manner that will endanger the structure, nor shall Contractor subject any part of the Work or adjacent structures or land to stresses or pressures that will endanger them.

5.03 *Subsurface and Physical Conditions*

A. *Reports and Drawings*: The Supplementary Conditions identify:

1. Those reports of explorations and tests of subsurface conditions at or adjacent to the Site that contain Technical Data;

2. Those drawings of existing physical conditions at or adjacent to the Site, including those drawings depicting existing surface or subsurface structures at or adjacent to the Site (except Underground Facilities), that contain Technical Data; and

3. Technical Data contained in such reports and drawings.

B. *Underground Facilities*: Underground Facilities are shown or indicated on the Drawings, pursuant to Paragraph 5.05, and not in the drawings referred to in Paragraph 5.03.A. Information and data regarding the presence or location of Underground Facilities are not intended to be categorized, identified, or defined as Technical Data.

C. *Reliance by Contractor on Technical Data*: Contractor may rely upon the accuracy of the Technical Data expressly identified in the Supplementary Conditions with respect to such reports and drawings, but such reports and drawings are not Contract Documents. If no such express identification has been made, then Contractor may rely upon the accuracy of the Technical Data as defined in Paragraph 1.01.A.46.b.

D. *Limitations of Other Data and Documents*: Except for such reliance on Technical Data, Contractor may not rely upon or make any claim against Owner or Engineer, or any of their officers, directors, members, partners, employees, agents, consultants, or subcontractors, with respect to:

1. the completeness of such reports and drawings for Contractor's purposes, including, but not limited to, any aspects of the means, methods, techniques, sequences, and procedures of construction to be employed by Contractor, and safety precautions and programs incident thereto;
2. other data, interpretations, opinions, and information contained in such reports or shown or indicated in such drawings;
3. the contents of other Site-related documents made available to Contractor, such as record drawings from other projects at or adjacent to the Site, or Owner's archival documents concerning the Site; or
4. any Contractor interpretation of or conclusion drawn from any Technical Data or any such other data, interpretations, opinions, or information.

5.04 *Differing Subsurface or Physical Conditions*

A. *Notice by Contractor*: If Contractor believes that any subsurface or physical condition that is uncovered or revealed at the Site:

1. is of such a nature as to establish that any Technical Data on which Contractor is entitled to rely as provided in Paragraph 5.03 is materially inaccurate;
2. is of such a nature as to require a change in the Drawings or Specifications;
3. differs materially from that shown or indicated in the Contract Documents; or
4. is of an unusual nature, and differs materially from conditions ordinarily encountered and generally recognized as inherent in work of the character provided for in the Contract Documents;

then Contractor shall, promptly after becoming aware thereof and before further disturbing the subsurface or physical conditions or performing any Work in connection therewith (except in an emergency as required by Paragraph 7.15), notify Owner and Engineer in writing about such condition. Contractor shall not further disturb such condition or perform any Work in connection therewith (except with respect to an emergency) until receipt of a written statement permitting Contractor to do so.

B. *Engineer's Review*: After receipt of written notice as required by the preceding paragraph, Engineer will promptly review the subsurface or physical condition in question; determine whether it is necessary for Owner to obtain additional exploration or tests with respect to the condition; conclude whether the condition falls within any one or more of the differing site condition categories in Paragraph 5.04.A; obtain any pertinent cost or schedule information from Contractor; prepare recommendations to Owner regarding the Contractor's resumption of Work in connection with the subsurface or physical condition in question and the need for any change in the Drawings or Specifications; and advise Owner in writing of Engineer's findings, conclusions, and recommendations.

C. *Owner's Statement to Contractor Regarding Site Condition*: After receipt of Engineer's written findings, conclusions, and recommendations, Owner shall issue a written statement

to Contractor (with a copy to Engineer) regarding the subsurface or physical condition in question, addressing the resumption of Work in connection with such condition, indicating whether any change in the Drawings or Specifications will be made, and adopting or rejecting Engineer's written findings, conclusions, and recommendations, in whole or in part.

D. *Early Resumption of Work*: If at any time Engineer determines that Work in connection with the subsurface or physical condition in question may resume prior to completion of Engineer's review or Owner's issuance of its statement to Contractor, because the condition in question has been adequately documented, and analyzed on a preliminary basis, then the Engineer may at its discretion instruct Contractor to resume such Work.

E. *Possible Price and Times Adjustments*

1. Contractor shall be entitled to an equitable adjustment in Contract Price or Contract Times, to the extent that the existence of a differing subsurface or physical condition, or any related delay, disruption, or interference, causes an increase or decrease in Contractor's cost of, or time required for, performance of the Work; subject, however, to the following:

    a. Such condition must fall within any one or more of the categories described in Paragraph 5.04.A;

    b. With respect to Work that is paid for on a unit price basis, any adjustment in Contract Price will be subject to the provisions of Paragraph 13.03; and,

    c. Contractor's entitlement to an adjustment of the Contract Times is subject to the provisions of Paragraphs 4.05.D and 4.05.E.

2. Contractor shall not be entitled to any adjustment in the Contract Price or Contract Times with respect to a subsurface or physical condition if:

    a. Contractor knew of the existence of such condition at the time Contractor made a commitment to Owner with respect to Contract Price and Contract Times by the submission of a Bid or becoming bound under a negotiated contract, or otherwise;

    b. The existence of such condition reasonably could have been discovered or revealed as a result of any examination, investigation, exploration, test, or study of the Site and contiguous areas expressly required by the Bidding Requirements or Contract Documents to be conducted by or for Contractor prior to Contractor's making such commitment; or

    c. Contractor failed to give the written notice required by Paragraph 5.04.A.

3. If Owner and Contractor agree regarding Contractor's entitlement to and the amount or extent of any adjustment in the Contract Price or Contract Times, then any such adjustment will be set forth in a Change Order.

4. Contractor may submit a Change Proposal regarding its entitlement to or the amount or extent of any adjustment in the Contract Price or Contract Times, no later than 30 days after Owner's issuance of the Owner's written statement to Contractor regarding the subsurface or physical condition in question.

F. *Underground Facilities; Hazardous Environmental Conditions*: Paragraph 5.05 governs rights and responsibilities regarding the presence or location of Underground Facilities.

Paragraph 5.06 governs rights and responsibilities regarding Hazardous Environmental Conditions. The provisions of Paragraphs 5.03 and 5.04 are not applicable to the presence or location of Underground Facilities, or to Hazardous Environmental Conditions.

5.05 *Underground Facilities*

A. *Contractor's Responsibilities*: Unless it is otherwise expressly provided in the Supplementary Conditions, the cost of all of the following are included in the Contract Price, and Contractor shall have full responsibility for:

1. reviewing and checking all information and data regarding existing Underground Facilities at the Site;
2. complying with applicable state and local utility damage prevention Laws and Regulations;
3. verifying the actual location of those Underground Facilities shown or indicated in the Contract Documents as being within the area affected by the Work, by exposing such Underground Facilities during the course of construction;
4. coordination of the Work with the owners (including Owner) of such Underground Facilities, during construction; and
5. the safety and protection of all existing Underground Facilities at the Site, and repairing any damage thereto resulting from the Work.

B. *Notice by Contractor*: If Contractor believes that an Underground Facility that is uncovered or revealed at the Site was not shown or indicated on the Drawings, or was not shown or indicated on the Drawings with reasonable accuracy, then Contractor shall, promptly after becoming aware thereof and before further disturbing conditions affected thereby or performing any Work in connection therewith (except in an emergency as required by Paragraph 7.15), notify Owner and Engineer in writing regarding such Underground Facility.

C. *Engineer's Review*: Engineer will:

1. promptly review the Underground Facility and conclude whether such Underground Facility was not shown or indicated on the Drawings, or was not shown or indicated with reasonable accuracy;
2. identify and communicate with the owner of the Underground Facility; prepare recommendations to Owner (and if necessary issue any preliminary instructions to Contractor) regarding the Contractor's resumption of Work in connection with the Underground Facility in question;
3. obtain any pertinent cost or schedule information from Contractor; determine the extent, if any, to which a change is required in the Drawings or Specifications to reflect and document the consequences of the existence or location of the Underground Facility; and
4. advise Owner in writing of Engineer's findings, conclusions, and recommendations.

During such time, Contractor shall be responsible for the safety and protection of such Underground Facility.

D. *Owner's Statement to Contractor Regarding Underground Facility*: After receipt of Engineer's written findings, conclusions, and recommendations, Owner shall issue a written

statement to Contractor (with a copy to Engineer) regarding the Underground Facility in question addressing the resumption of Work in connection with such Underground Facility, indicating whether any change in the Drawings or Specifications will be made, and adopting or rejecting Engineer's written findings, conclusions, and recommendations in whole or in part.

E. *Early Resumption of Work*: If at any time Engineer determines that Work in connection with the Underground Facility may resume prior to completion of Engineer's review or Owner's issuance of its statement to Contractor, because the Underground Facility in question and conditions affected by its presence have been adequately documented, and analyzed on a preliminary basis, then the Engineer may at its discretion instruct Contractor to resume such Work.

F. *Possible Price and Times Adjustments*

1. Contractor shall be entitled to an equitable adjustment in the Contract Price or Contract Times, to the extent that any existing Underground Facility at the Site that was not shown or indicated on the Drawings, or was not shown or indicated with reasonable accuracy, or any related delay, disruption, or interference, causes an increase or decrease in Contractor's cost of, or time required for, performance of the Work; subject, however, to the following:

   a. With respect to Work that is paid for on a unit price basis, any adjustment in Contract Price will be subject to the provisions of Paragraph 13.03;

   b. Contractor's entitlement to an adjustment of the Contract Times is subject to the provisions of Paragraphs 4.05.D and 4.05.E; and

   c. Contractor gave the notice required in Paragraph 5.05.B.

2. If Owner and Contractor agree regarding Contractor's entitlement to and the amount or extent of any adjustment in the Contract Price or Contract Times, then any such adjustment will be set forth in a Change Order.

3. Contractor may submit a Change Proposal regarding its entitlement to or the amount or extent of any adjustment in the Contract Price or Contract Times, no later than 30 days after Owner's issuance of the Owner's written statement to Contractor regarding the Underground Facility in question.

4. The information and data shown or indicated on the Drawings with respect to existing Underground Facilities at the Site is based on information and data (a) furnished by the owners of such Underground Facilities, or by others, (b) obtained from available records, or (c) gathered in an investigation conducted in accordance with the current edition of ASCE 38, Standard Guideline for the Collection and Depiction of Existing Subsurface Utility Data, by the American Society of Civil Engineers. If such information or data is incorrect or incomplete, Contractor's remedies are limited to those set forth in this Paragraph 5.05.F.

5.06 *Hazardous Environmental Conditions at Site*

A. *Reports and Drawings*: The Supplementary Conditions identify:

1. those reports known to Owner relating to Hazardous Environmental Conditions that have been identified at or adjacent to the Site;

2. drawings known to Owner relating to Hazardous Environmental Conditions that have been identified at or adjacent to the Site; and

3. Technical Data contained in such reports and drawings.

B. *Reliance by Contractor on Technical Data Authorized*: Contractor may rely upon the accuracy of the Technical Data expressly identified in the Supplementary Conditions with respect to such reports and drawings, but such reports and drawings are not Contract Documents. If no such express identification has been made, then Contractor may rely on the accuracy of the Technical Data as defined in Paragraph 1.01.A.46.b. Except for such reliance on Technical Data, Contractor may not rely upon or make any claim against Owner or Engineer, or any of their officers, directors, members, partners, employees, agents, consultants, or subcontractors, with respect to:

1. the completeness of such reports and drawings for Contractor's purposes, including, but not limited to, any aspects of the means, methods, techniques, sequences and procedures of construction to be employed by Contractor, and safety precautions and programs incident thereto;

2. other data, interpretations, opinions, and information contained in such reports or shown or indicated in such drawings; or

3. any Contractor interpretation of or conclusion drawn from any Technical Data or any such other data, interpretations, opinions or information.

C. Contractor shall not be responsible for removing or remediating any Hazardous Environmental Condition encountered, uncovered, or revealed at the Site unless such removal or remediation is expressly identified in the Contract Documents to be within the scope of the Work.

D. Contractor shall be responsible for controlling, containing, and duly removing all Constituents of Concern brought to the Site by Contractor, Subcontractors, Suppliers, or anyone else for whom Contractor is responsible, and for any associated costs; and for the costs of removing and remediating any Hazardous Environmental Condition created by the presence of any such Constituents of Concern.

E. If Contractor encounters, uncovers, or reveals a Hazardous Environmental Condition whose removal or remediation is not expressly identified in the Contract Documents as being within the scope of the Work, or if Contractor or anyone for whom Contractor is responsible creates a Hazardous Environmental Condition, then Contractor shall immediately: (1) secure or otherwise isolate such condition; (2) stop all Work in connection with such condition and in any area affected thereby (except in an emergency as required by Paragraph 7.15); and (3) notify Owner and Engineer (and promptly thereafter confirm such notice in writing). Owner shall promptly consult with Engineer concerning the necessity for Owner to retain a qualified expert to evaluate such condition or take corrective action, if any. Promptly after consulting with Engineer, Owner shall take such actions as are necessary to permit Owner to timely obtain required permits and provide Contractor the written notice required by Paragraph 5.06.F. If Contractor or anyone for whom Contractor is responsible created the Hazardous Environmental Condition in question, then Owner may remove and remediate the Hazardous Environmental Condition, and impose a set-off against payments to account for the associated costs.

F. Contractor shall not resume Work in connection with such Hazardous Environmental Condition or in any affected area until after Owner has obtained any required permits related thereto, and delivered written notice to Contractor either (1) specifying that such condition and any affected area is or has been rendered safe for the resumption of Work, or (2) specifying any special conditions under which such Work may be resumed safely.

G. If Owner and Contractor cannot agree as to entitlement to or on the amount or extent, if any, of any adjustment in Contract Price or Contract Times, as a result of such Work stoppage, such special conditions under which Work is agreed to be resumed by Contractor, or any costs or expenses incurred in response to the Hazardous Environmental Condition, then within 30 days of Owner's written notice regarding the resumption of Work, Contractor may submit a Change Proposal, or Owner may impose a set-off. Entitlement to any such adjustment is subject to the provisions of Paragraphs 4.05.D, 4.05.E, 11.07, and 11.08.

H. If, after receipt of such written notice, Contractor does not agree to resume such Work based on a reasonable belief it is unsafe, or does not agree to resume such Work under such special conditions, then Owner may order the portion of the Work that is in the area affected by such condition to be deleted from the Work, following the contractual change procedures in Article 11. Owner may have such deleted portion of the Work performed by Owner's own forces or others in accordance with Article 8.

I. To the fullest extent permitted by Laws and Regulations, Owner shall indemnify and hold harmless Contractor, Subcontractors, and Engineer, and the officers, directors, members, partners, employees, agents, consultants, and subcontractors of each and any of them, from and against all claims, costs, losses, and damages (including but not limited to all fees and charges of engineers, architects, attorneys, and other professionals, and all court, arbitration, or other dispute resolution costs) arising out of or relating to a Hazardous Environmental Condition, provided that such Hazardous Environmental Condition (1) was not shown or indicated in the Drawings, Specifications, or other Contract Documents, identified as Technical Data entitled to limited reliance pursuant to Paragraph 5.06.B, or identified in the Contract Documents to be included within the scope of the Work, and (2) was not created by Contractor or by anyone for whom Contractor is responsible. Nothing in this Paragraph 5.06.I obligates Owner to indemnify any individual or entity from and against the consequences of that individual's or entity's own negligence.

J. To the fullest extent permitted by Laws and Regulations, Contractor shall indemnify and hold harmless Owner and Engineer, and the officers, directors, members, partners, employees, agents, consultants, and subcontractors of each and any of them, from and against all claims, costs, losses, and damages (including but not limited to all fees and charges of engineers, architects, attorneys, and other professionals and all court or arbitration or other dispute resolution costs) arising out of or relating to the failure to control, contain, or remove a Constituent of Concern brought to the Site by Contractor or by anyone for whom Contractor is responsible, or to a Hazardous Environmental Condition created by Contractor or by anyone for whom Contractor is responsible. Nothing in this Paragraph 5.06.J obligates Contractor to indemnify any individual or entity from and against the consequences of that individual's or entity's own negligence.

K. The provisions of Paragraphs 5.03, 5.04, and 5.05 do not apply to the presence of Constituents of Concern or to a Hazardous Environmental Condition uncovered or revealed at the Site.

ARTICLE 6—BONDS AND INSURANCE

6.01 *Performance, Payment, and Other Bonds*

A. Contractor shall furnish a performance bond and a payment bond, each in an amount at least equal to the Contract Price, as security for the faithful performance and payment of Contractor's obligations under the Contract. These bonds must remain in effect until one year after the date when final payment becomes due or until completion of the correction period specified in Paragraph 15.08, whichever is later, except as provided otherwise by Laws or Regulations, the terms of a prescribed bond form, the Supplementary Conditions, or other provisions of the Contract.

B. Contractor shall also furnish such other bonds (if any) as are required by the Supplementary Conditions or other provisions of the Contract.

C. All bonds must be in the form included in the Bidding Documents or otherwise specified by Owner prior to execution of the Contract, except as provided otherwise by Laws or Regulations, and must be issued and signed by a surety named in "Companies Holding Certificates of Authority as Acceptable Sureties on Federal Bonds and as Acceptable Reinsuring Companies" as published in Department Circular 570 (as amended and supplemented) by the Bureau of the Fiscal Service, U.S. Department of the Treasury. A bond signed by an agent or attorney-in-fact must be accompanied by a certified copy of that individual's authority to bind the surety. The evidence of authority must show that it is effective on the date the agent or attorney-in-fact signed the accompanying bond.

D. Contractor shall obtain the required bonds from surety companies that are duly licensed or authorized, in the state or jurisdiction in which the Project is located, to issue bonds in the required amounts.

E. If the surety on a bond furnished by Contractor is declared bankrupt or becomes insolvent, or the surety ceases to meet the requirements above, then Contractor shall promptly notify Owner and Engineer in writing and shall, within 20 days after the event giving rise to such notification, provide another bond and surety, both of which must comply with the bond and surety requirements above.

F. If Contractor has failed to obtain a required bond, Owner may exclude the Contractor from the Site and exercise Owner's termination rights under Article 16.

G. Upon request to Owner from any Subcontractor, Supplier, or other person or entity claiming to have furnished labor, services, materials, or equipment used in the performance of the Work, Owner shall provide a copy of the payment bond to such person or entity.

H. Upon request to Contractor from any Subcontractor, Supplier, or other person or entity claiming to have furnished labor, services, materials, or equipment used in the performance of the Work, Contractor shall provide a copy of the payment bond to such person or entity.

6.02 *Insurance—General Provisions*

A. Owner and Contractor shall obtain and maintain insurance as required in this article and in the Supplementary Conditions.

B. All insurance required by the Contract to be purchased and maintained by Owner or Contractor shall be obtained from insurance companies that are duly licensed or authorized in the state or jurisdiction in which the Project is located to issue insurance policies for the

required limits and coverages. Unless a different standard is indicated in the Supplementary Conditions, all companies that provide insurance policies required under this Contract shall have an A.M. Best rating of A-VII or better.

C. Alternative forms of insurance coverage, including but not limited to self-insurance and "Occupational Accident and Excess Employer's Indemnity Policies," are not sufficient to meet the insurance requirements of this Contract, unless expressly allowed in the Supplementary Conditions.

D. Contractor shall deliver to Owner, with copies to each additional insured identified in the Contract, certificates of insurance and endorsements establishing that Contractor has obtained and is maintaining the policies and coverages required by the Contract. Upon request by Owner or any other insured, Contractor shall also furnish other evidence of such required insurance, including but not limited to copies of policies, documentation of applicable self-insured retentions (if allowed) and deductibles, full disclosure of all relevant exclusions, and evidence of insurance required to be purchased and maintained by Subcontractors or Suppliers. In any documentation furnished under this provision, Contractor, Subcontractors, and Suppliers may block out (redact) (1) any confidential premium or pricing information and (2) any wording specific to a project or jurisdiction other than those applicable to this Contract.

E. Owner shall deliver to Contractor, with copies to each additional insured identified in the Contract, certificates of insurance and endorsements establishing that Owner has obtained and is maintaining the policies and coverages required of Owner by the Contract (if any). Upon request by Contractor or any other insured, Owner shall also provide other evidence of such required insurance (if any), including but not limited to copies of policies, documentation of applicable self-insured retentions (if allowed) and deductibles, and full disclosure of all relevant exclusions. In any documentation furnished under this provision, Owner may block out (redact) (1) any confidential premium or pricing information and (2) any wording specific to a project or jurisdiction other than those relevant to this Contract.

F. Failure of Owner or Contractor to demand such certificates or other evidence of the other party's full compliance with these insurance requirements, or failure of Owner or Contractor to identify a deficiency in compliance from the evidence provided, will not be construed as a waiver of the other party's obligation to obtain and maintain such insurance.

G. In addition to the liability insurance required to be provided by Contractor, the Owner, at Owner's option, may purchase and maintain Owner's own liability insurance. Owner's liability policies, if any, operate separately and independently from policies required to be provided by Contractor, and Contractor cannot rely upon Owner's liability policies for any of Contractor's obligations to the Owner, Engineer, or third parties.

H. Contractor shall require:

1. Subcontractors to purchase and maintain worker's compensation, commercial general liability, and other insurance that is appropriate for their participation in the Project, and to name as additional insureds Owner and Engineer (and any other individuals or entities identified in the Supplementary Conditions as additional insureds on Contractor's liability policies) on each Subcontractor's commercial general liability insurance policy; and

2. Suppliers to purchase and maintain insurance that is appropriate for their participation in the Project.

I. If either party does not purchase or maintain the insurance required of such party by the Contract, such party shall notify the other party in writing of such failure to purchase prior to the start of the Work, or of such failure to maintain prior to any change in the required coverage.

J. If Contractor has failed to obtain and maintain required insurance, Contractor's entitlement to enter or remain at the Site will end immediately, and Owner may impose an appropriate set-off against payment for any associated costs (including but not limited to the cost of purchasing necessary insurance coverage), and exercise Owner's termination rights under Article 16.

K. Without prejudice to any other right or remedy, if a party has failed to obtain required insurance, the other party may elect (but is in no way obligated) to obtain equivalent insurance to protect such other party's interests at the expense of the party who was required to provide such coverage, and the Contract Price will be adjusted accordingly.

L. Owner does not represent that insurance coverage and limits established in this Contract necessarily will be adequate to protect Contractor or Contractor's interests. Contractor is responsible for determining whether such coverage and limits are adequate to protect its interests, and for obtaining and maintaining any additional insurance that Contractor deems necessary.

M. The insurance and insurance limits required herein will not be deemed as a limitation on Contractor's liability, or that of its Subcontractors or Suppliers, under the indemnities granted to Owner and other individuals and entities in the Contract or otherwise.

N. All the policies of insurance required to be purchased and maintained under this Contract will contain a provision or endorsement that the coverage afforded will not be canceled, or renewal refused, until at least 10 days prior written notice has been given to the purchasing policyholder. Within three days of receipt of any such written notice, the purchasing policyholder shall provide a copy of the notice to each other insured and Engineer.

6.03 *Contractor's Insurance*

A. *Required Insurance*: Contractor shall purchase and maintain Worker's Compensation, Commercial General Liability, and other insurance pursuant to the specific requirements of the Supplementary Conditions.

B. *General Provisions*: The policies of insurance required by this Paragraph 6.03 as supplemented must:

1. include at least the specific coverages required;

2. be written for not less than the limits provided, or those required by Laws or Regulations, whichever is greater;

3. remain in effect at least until the Work is complete (as set forth in Paragraph 15.06.D), and longer if expressly required elsewhere in this Contract, and at all times thereafter when Contractor may be correcting, removing, or replacing defective Work as a warranty or correction obligation, or otherwise, or returning to the Site to conduct other tasks arising from the Contract;

4. apply with respect to the performance of the Work, whether such performance is by Contractor, any Subcontractor or Supplier, or by anyone directly or indirectly employed by any of them to perform any of the Work, or by anyone for whose acts any of them may be liable; and

5. include all necessary endorsements to support the stated requirements.

C. *Additional Insureds*: The Contractor's commercial general liability, automobile liability, employer's liability, umbrella or excess, pollution liability, and unmanned aerial vehicle liability policies, if required by this Contract, must:

1. include and list as additional insureds Owner and Engineer, and any individuals or entities identified as additional insureds in the Supplementary Conditions;

2. include coverage for the respective officers, directors, members, partners, employees, and consultants of all such additional insureds;

3. afford primary coverage to these additional insureds for all claims covered thereby (including as applicable those arising from both ongoing and completed operations);

4. not seek contribution from insurance maintained by the additional insured; and

5. as to commercial general liability insurance, apply to additional insureds with respect to liability caused in whole or in part by Contractor's acts or omissions, or the acts and omissions of those working on Contractor's behalf, in the performance of Contractor's operations.

6.04 *Builder's Risk and Other Property Insurance*

A. *Builder's Risk*: Unless otherwise provided in the Supplementary Conditions, Contractor shall purchase and maintain builder's risk insurance upon the Work on a completed value basis, in the amount of the Work's full insurable replacement cost (subject to such deductible amounts as may be provided in the Supplementary Conditions or required by Laws and Regulations). The specific requirements applicable to the builder's risk insurance are set forth in the Supplementary Conditions.

B. *Property Insurance for Facilities of Owner Where Work Will Occur*: Owner is responsible for obtaining and maintaining property insurance covering each existing structure, building, or facility in which any part of the Work will occur, or to which any part of the Work will attach or be adjoined. Such property insurance will be written on a special perils (all-risk) form, on a replacement cost basis, providing coverage consistent with that required for the builder's risk insurance, and will be maintained until the Work is complete, as set forth in Paragraph 15.06.D.

C. *Property Insurance for Substantially Complete Facilities*: Promptly after Substantial Completion, and before actual occupancy or use of the substantially completed Work, Owner will obtain property insurance for such substantially completed Work, and maintain such property insurance at least until the Work is complete, as set forth in Paragraph 15.06.D. Such property insurance will be written on a special perils (all-risk) form, on a replacement cost basis, and provide coverage consistent with that required for the builder's risk insurance. The builder's risk insurance may terminate upon written confirmation of Owner's procurement of such property insurance.

D. *Partial Occupancy or Use by Owner*: If Owner will occupy or use a portion or portions of the Work prior to Substantial Completion of all the Work, as provided in Paragraph 15.04, then Owner (directly, if it is the purchaser of the builder's risk policy, or through Contractor) will provide advance notice of such occupancy or use to the builder's risk insurer, and obtain an endorsement consenting to the continuation of coverage prior to commencing such partial occupancy or use.

E. *Insurance of Other Property; Additional Insurance*: If the express insurance provisions of the Contract do not require or address the insurance of a property item or interest, then the entity or individual owning such property item will be responsible for insuring it. If Contractor elects to obtain other special insurance to be included in or supplement the builder's risk or property insurance policies provided under this Paragraph 6.04, it may do so at Contractor's expense.

6.05 *Property Losses; Subrogation*

A. The builder's risk insurance policy purchased and maintained in accordance with Paragraph 6.04 (or an installation floater policy if authorized by the Supplementary Conditions), will contain provisions to the effect that in the event of payment of any loss or damage the insurer will have no rights of recovery against any insureds thereunder, or against Engineer or its consultants, or their officers, directors, members, partners, employees, agents, consultants, or subcontractors.

1. Owner and Contractor waive all rights against each other and the respective officers, directors, members, partners, employees, agents, consultants, and subcontractors of each and any of them, for all losses and damages caused by, arising out of, or resulting from any of the perils, risks, or causes of loss covered by such policies and any other property insurance applicable to the Work; and, in addition, waive all such rights against Engineer, its consultants, all individuals or entities identified in the Supplementary Conditions as builder's risk or installation floater insureds, and the officers, directors, members, partners, employees, agents, consultants, and subcontractors of each and any of them, under such policies for losses and damages so caused.

2. None of the above waivers extends to the rights that any party making such waiver may have to the proceeds of insurance held by Owner or Contractor as trustee or fiduciary, or otherwise payable under any policy so issued.

B. Any property insurance policy maintained by Owner covering any loss, damage, or consequential loss to Owner's existing structures, buildings, or facilities in which any part of the Work will occur, or to which any part of the Work will attach or adjoin; to adjacent structures, buildings, or facilities of Owner; or to part or all of the completed or substantially completed Work, during partial occupancy or use pursuant to Paragraph 15.04, after Substantial Completion pursuant to Paragraph 15.03, or after final payment pursuant to Paragraph 15.06, will contain provisions to the effect that in the event of payment of any loss or damage the insurer will have no rights of recovery against any insureds thereunder, or against Contractor, Subcontractors, or Engineer, or the officers, directors, members, partners, employees, agents, consultants, or subcontractors of each and any of them, and that the insured is allowed to waive the insurer's rights of subrogation in a written contract executed prior to the loss, damage, or consequential loss.

1. Owner waives all rights against Contractor, Subcontractors, and Engineer, and the officers, directors, members, partners, employees, agents, consultants and subcontractors of each and any of them, for all losses and damages caused by, arising out of, or resulting from fire or any of the perils, risks, or causes of loss covered by such policies.

C. The waivers in this Paragraph 6.05 include the waiver of rights due to business interruption, loss of use, or other consequential loss extending beyond direct physical loss or damage to Owner's property or the Work caused by, arising out of, or resulting from fire or other insured peril, risk, or cause of loss.

D. Contractor shall be responsible for assuring that each Subcontract contains provisions whereby the Subcontractor waives all rights against Owner, Contractor, all individuals or entities identified in the Supplementary Conditions as insureds, the Engineer and its consultants, and the officers, directors, members, partners, employees, agents, consultants, and subcontractors of each and any of them, for all losses and damages caused by, arising out of, relating to, or resulting from fire or other peril, risk, or cause of loss covered by builder's risk insurance, installation floater, and any other property insurance applicable to the Work.

6.06 *Receipt and Application of Property Insurance Proceeds*

A. Any insured loss under the builder's risk and other policies of property insurance required by Paragraph 6.04 will be adjusted and settled with the named insured that purchased the policy. Such named insured shall act as fiduciary for the other insureds, and give notice to such other insureds that adjustment and settlement of a claim is in progress. Any other insured may state its position regarding a claim for insured loss in writing within 15 days after notice of such claim.

B. Proceeds for such insured losses may be made payable by the insurer either jointly to multiple insureds, or to the named insured that purchased the policy in its own right and as fiduciary for other insureds, subject to the requirements of any applicable mortgage clause. A named insured receiving insurance proceeds under the builder's risk and other policies of insurance required by Paragraph 6.04 shall maintain such proceeds in a segregated account, and distribute such proceeds in accordance with such agreement as the parties in interest may reach, or as otherwise required under the dispute resolution provisions of this Contract or applicable Laws and Regulations.

C. If no other special agreement is reached, Contractor shall repair or replace the damaged Work, using allocated insurance proceeds.

ARTICLE 7—CONTRACTOR'S RESPONSIBILITIES

7.01 *Contractor's Means and Methods of Construction*

A. Contractor shall be solely responsible for the means, methods, techniques, sequences, and procedures of construction.

B. If the Contract Documents note, or Contractor determines, that professional engineering or other design services are needed to carry out Contractor's responsibilities for construction means, methods, techniques, sequences, and procedures, or for Site safety, then Contractor shall cause such services to be provided by a properly licensed design professional, at

Contractor's expense. Such services are not Owner-delegated professional design services under this Contract, and neither Owner nor Engineer has any responsibility with respect to (1) Contractor's determination of the need for such services, (2) the qualifications or licensing of the design professionals retained or employed by Contractor, (3) the performance of such services, or (4) any errors, omissions, or defects in such services.

7.02 *Supervision and Superintendence*

A. Contractor shall supervise, inspect, and direct the Work competently and efficiently, devoting such attention thereto and applying such skills and expertise as may be necessary to perform the Work in accordance with the Contract Documents.

B. At all times during the progress of the Work, Contractor shall assign a competent resident superintendent who will not be replaced without written notice to Owner and Engineer except under extraordinary circumstances.

7.03 *Labor; Working Hours*

A. Contractor shall provide competent, suitably qualified personnel to survey and lay out the Work and perform construction as required by the Contract Documents. Contractor shall maintain good discipline and order at the Site.

B. Contractor shall be fully responsible to Owner and Engineer for all acts and omissions of Contractor's employees; of Suppliers and Subcontractors, and their employees; and of any other individuals or entities performing or furnishing any of the Work, just as Contractor is responsible for Contractor's own acts and omissions.

C. Except as otherwise required for the safety or protection of persons or the Work or property at the Site or adjacent thereto, and except as otherwise stated in the Contract Documents, all Work at the Site will be performed during regular working hours, Monday through Friday. Contractor will not perform Work on a Saturday, Sunday, or any legal holiday. Contractor may perform Work outside regular working hours or on Saturdays, Sundays, or legal holidays only with Owner's written consent, which will not be unreasonably withheld.

7.04 *Services, Materials, and Equipment*

A. Unless otherwise specified in the Contract Documents, Contractor shall provide and assume full responsibility for all services, materials, equipment, labor, transportation, construction equipment and machinery, tools, appliances, fuel, power, light, heat, telephone, water, sanitary facilities, temporary facilities, and all other facilities and incidentals necessary for the performance, testing, start up, and completion of the Work, whether or not such items are specifically called for in the Contract Documents.

B. All materials and equipment incorporated into the Work must be new and of good quality, except as otherwise provided in the Contract Documents. All special warranties and guarantees required by the Specifications will expressly run to the benefit of Owner. If required by Engineer, Contractor shall furnish satisfactory evidence (including reports of required tests) as to the source, kind, and quality of materials and equipment.

C. All materials and equipment must be stored, applied, installed, connected, erected, protected, used, cleaned, and conditioned in accordance with instructions of the applicable Supplier, except as otherwise may be provided in the Contract Documents.

7.05 *"Or Equals"*

A. *Contractor's Request; Governing Criteria*: Whenever an item of equipment or material is specified or described in the Contract Documents by using the names of one or more proprietary items or specific Suppliers, the Contract Price has been based upon Contractor furnishing such item as specified. The specification or description of such an item is intended to establish the type, function, appearance, and quality required. Unless the specification or description contains or is followed by words reading that no like, equivalent, or "or equal" item is permitted, Contractor may request that Engineer authorize the use of other items of equipment or material, or items from other proposed Suppliers, under the circumstances described below.

1. If Engineer in its sole discretion determines that an item of equipment or material proposed by Contractor is functionally equal to that named and sufficiently similar so that no change in related Work will be required, Engineer will deem it an "or equal" item. For the purposes of this paragraph, a proposed item of equipment or material will be considered functionally equal to an item so named if:

   a. in the exercise of reasonable judgment Engineer determines that the proposed item:

      1) is at least equal in materials of construction, quality, durability, appearance, strength, and design characteristics;

      2) will reliably perform at least equally well the function and achieve the results imposed by the design concept of the completed Project as a functioning whole;

      3) has a proven record of performance and availability of responsive service; and

      4) is not objectionable to Owner.

   b. Contractor certifies that, if the proposed item is approved and incorporated into the Work:

      1) there will be no increase in cost to the Owner or increase in Contract Times; and

      2) the item will conform substantially to the detailed requirements of the item named in the Contract Documents.

B. *Contractor's Expense*: Contractor shall provide all data in support of any proposed "or equal" item at Contractor's expense.

C. *Engineer's Evaluation and Determination*: Engineer will be allowed a reasonable time to evaluate each "or-equal" request. Engineer may require Contractor to furnish additional data about the proposed "or-equal" item. Engineer will be the sole judge of acceptability. No "or-equal" item will be ordered, furnished, installed, or utilized until Engineer's review is complete and Engineer determines that the proposed item is an "or-equal," which will be evidenced by an approved Shop Drawing or other written communication. Engineer will advise Contractor in writing of any negative determination.

D. *Effect of Engineer's Determination*: Neither approval nor denial of an "or-equal" request will result in any change in Contract Price. The Engineer's denial of an "or-equal" request will be final and binding, and may not be reversed through an appeal under any provision of the Contract.

E. *Treatment as a Substitution Request*: If Engineer determines that an item of equipment or material proposed by Contractor does not qualify as an "or-equal" item, Contractor may request that Engineer consider the item a proposed substitute pursuant to Paragraph 7.06.

7.06 *Substitutes*

A. *Contractor's Request; Governing Criteria*: Unless the specification or description of an item of equipment or material required to be furnished under the Contract Documents contains or is followed by words reading that no substitution is permitted, Contractor may request that Engineer authorize the use of other items of equipment or material under the circumstances described below. To the extent possible such requests must be made before commencement of related construction at the Site.

1. Contractor shall submit sufficient information as provided below to allow Engineer to determine if the item of material or equipment proposed is functionally equivalent to that named and an acceptable substitute therefor. Engineer will not accept requests for review of proposed substitute items of equipment or material from anyone other than Contractor.

2. The requirements for review by Engineer will be as set forth in Paragraph 7.06.B, as supplemented by the Specifications, and as Engineer may decide is appropriate under the circumstances.

3. Contractor shall make written application to Engineer for review of a proposed substitute item of equipment or material that Contractor seeks to furnish or use. The application:

a. will certify that the proposed substitute item will:

1) perform adequately the functions and achieve the results called for by the general design;

2) be similar in substance to the item specified; and

3) be suited to the same use as the item specified.

b. will state:

1) the extent, if any, to which the use of the proposed substitute item will necessitate a change in Contract Times;

2) whether use of the proposed substitute item in the Work will require a change in any of the Contract Documents (or in the provisions of any other direct contract with Owner for other work on the Project) to adapt the design to the proposed substitute item; and

3) whether incorporation or use of the proposed substitute item in connection with the Work is subject to payment of any license fee or royalty.

c. will identify:

1) all variations of the proposed substitute item from the item specified; and

2) available engineering, sales, maintenance, repair, and replacement services.

d. will contain an itemized estimate of all costs or credits that will result directly or indirectly from use of such substitute item, including but not limited to changes in

Contract Price, shared savings, costs of redesign, and claims of other contractors affected by any resulting change.

B. *Engineer's Evaluation and Determination*: Engineer will be allowed a reasonable time to evaluate each substitute request, and to obtain comments and direction from Owner. Engineer may require Contractor to furnish additional data about the proposed substitute item. Engineer will be the sole judge of acceptability. No substitute will be ordered, furnished, installed, or utilized until Engineer's review is complete and Engineer determines that the proposed item is an acceptable substitute. Engineer's determination will be evidenced by a Field Order or a proposed Change Order accounting for the substitution itself and all related impacts, including changes in Contract Price or Contract Times. Engineer will advise Contractor in writing of any negative determination.

C. *Special Guarantee*: Owner may require Contractor to furnish at Contractor's expense a special performance guarantee or other surety with respect to any substitute.

D. *Reimbursement of Engineer's Cost*: Engineer will record Engineer's costs in evaluating a substitute proposed or submitted by Contractor. Whether or not Engineer approves a substitute so proposed or submitted by Contractor, Contractor shall reimburse Owner for the reasonable charges of Engineer for evaluating each such proposed substitute. Contractor shall also reimburse Owner for the reasonable charges of Engineer for making changes in the Contract Documents (or in the provisions of any other direct contract with Owner) resulting from the acceptance of each proposed substitute.

E. *Contractor's Expense*: Contractor shall provide all data in support of any proposed substitute at Contractor's expense.

F. *Effect of Engineer's Determination*: If Engineer approves the substitution request, Contractor shall execute the proposed Change Order and proceed with the substitution. The Engineer's denial of a substitution request will be final and binding, and may not be reversed through an appeal under any provision of the Contract. Contractor may challenge the scope of reimbursement costs imposed under Paragraph 7.06.D, by timely submittal of a Change Proposal.

7.07 *Concerning Subcontractors and Suppliers*

A. Contractor may retain Subcontractors and Suppliers for the performance of parts of the Work. Such Subcontractors and Suppliers must be acceptable to Owner. The Contractor's retention of a Subcontractor or Supplier for the performance of parts of the Work will not relieve Contractor's obligation to Owner to perform and complete the Work in accordance with the Contract Documents.

B. Contractor shall retain specific Subcontractors and Suppliers for the performance of designated parts of the Work if required by the Contract to do so.

C. Subsequent to the submittal of Contractor's Bid or final negotiation of the terms of the Contract, Owner may not require Contractor to retain any Subcontractor or Supplier to furnish or perform any of the Work against which Contractor has reasonable objection.

D. Prior to entry into any binding subcontract or purchase order, Contractor shall submit to Owner the identity of the proposed Subcontractor or Supplier (unless Owner has already deemed such proposed Subcontractor or Supplier acceptable during the bidding process or

otherwise). Such proposed Subcontractor or Supplier shall be deemed acceptable to Owner unless Owner raises a substantive, reasonable objection within 5 days.

E. Owner may require the replacement of any Subcontractor or Supplier. Owner also may require Contractor to retain specific replacements; provided, however, that Owner may not require a replacement to which Contractor has a reasonable objection. If Contractor has submitted the identity of certain Subcontractors or Suppliers for acceptance by Owner, and Owner has accepted it (either in writing or by failing to make written objection thereto), then Owner may subsequently revoke the acceptance of any such Subcontractor or Supplier so identified solely on the basis of substantive, reasonable objection after due investigation. Contractor shall submit an acceptable replacement for the rejected Subcontractor or Supplier.

F. If Owner requires the replacement of any Subcontractor or Supplier retained by Contractor to perform any part of the Work, then Contractor shall be entitled to an adjustment in Contract Price or Contract Times, with respect to the replacement; and Contractor shall initiate a Change Proposal for such adjustment within 30 days of Owner's requirement of replacement.

G. No acceptance by Owner of any such Subcontractor or Supplier, whether initially or as a replacement, will constitute a waiver of the right of Owner to the completion of the Work in accordance with the Contract Documents.

H. On a monthly basis, Contractor shall submit to Engineer a complete list of all Subcontractors and Suppliers having a direct contract with Contractor, and of all other Subcontractors and Suppliers known to Contractor at the time of submittal.

I. Contractor shall be solely responsible for scheduling and coordinating the work of Subcontractors and Suppliers.

J. The divisions and sections of the Specifications and the identifications of any Drawings do not control Contractor in dividing the Work among Subcontractors or Suppliers, or in delineating the Work to be performed by any specific trade.

K. All Work performed for Contractor by a Subcontractor or Supplier must be pursuant to an appropriate contractual agreement that specifically binds the Subcontractor or Supplier to the applicable terms and conditions of the Contract for the benefit of Owner and Engineer.

L. Owner may furnish to any Subcontractor or Supplier, to the extent practicable, information about amounts paid to Contractor for Work performed for Contractor by the Subcontractor or Supplier.

M. Contractor shall restrict all Subcontractors and Suppliers from communicating with Engineer or Owner, except through Contractor or in case of an emergency, or as otherwise expressly allowed in this Contract.

7.08 *Patent Fees and Royalties*

A. Contractor shall pay all license fees and royalties and assume all costs incident to the use in the performance of the Work or the incorporation in the Work of any invention, design, process, product, or device which is the subject of patent rights or copyrights held by others. If an invention, design, process, product, or device is specified in the Contract Documents for use in the performance of the Work and if, to the actual knowledge of Owner or Engineer, its use is subject to patent rights or copyrights calling for the payment of any

license fee or royalty to others, the existence of such rights will be disclosed in the Contract Documents.

B. To the fullest extent permitted by Laws and Regulations, Owner shall indemnify and hold harmless Contractor, and its officers, directors, members, partners, employees, agents, consultants, and subcontractors, from and against all claims, costs, losses, and damages (including but not limited to all fees and charges of engineers, architects, attorneys, and other professionals, and all court or arbitration or other dispute resolution costs) arising out of or relating to any infringement of patent rights or copyrights incident to the use in the performance of the Work or resulting from the incorporation in the Work of any invention, design, process, product, or device specified in the Contract Documents, but not identified as being subject to payment of any license fee or royalty to others required by patent rights or copyrights.

C. To the fullest extent permitted by Laws and Regulations, Contractor shall indemnify and hold harmless Owner and Engineer, and the officers, directors, members, partners, employees, agents, consultants and subcontractors of each and any of them, from and against all claims, costs, losses, and damages (including but not limited to all fees and charges of engineers, architects, attorneys, and other professionals and all court or arbitration or other dispute resolution costs) arising out of or relating to any infringement of patent rights or copyrights incident to the use in the performance of the Work or resulting from the incorporation in the Work of any invention, design, process, product, or device not specified in the Contract Documents.

7.09 *Permits*

A. Unless otherwise provided in the Contract Documents, Contractor shall obtain and pay for all construction permits, licenses, and certificates of occupancy. Owner shall assist Contractor, when necessary, in obtaining such permits and licenses. Contractor shall pay all governmental charges and inspection fees necessary for the prosecution of the Work which are applicable at the time of the submission of Contractor's Bid (or when Contractor became bound under a negotiated contract). Owner shall pay all charges of utility owners for connections for providing permanent service to the Work.

7.10 *Taxes*

A. Contractor shall pay all sales, consumer, use, and other similar taxes required to be paid by Contractor in accordance with the Laws and Regulations of the place of the Project which are applicable during the performance of the Work.

7.11 *Laws and Regulations*

A. Contractor shall give all notices required by and shall comply with all Laws and Regulations applicable to the performance of the Work. Neither Owner nor Engineer shall be responsible for monitoring Contractor's compliance with any Laws or Regulations.

B. If Contractor performs any Work or takes any other action knowing or having reason to know that it is contrary to Laws or Regulations, Contractor shall bear all resulting costs and losses, and shall indemnify and hold harmless Owner and Engineer, and the officers, directors, members, partners, employees, agents, consultants, and subcontractors of each and any of them, from and against all claims, costs, losses, and damages (including but not limited to all fees and charges of engineers, architects, attorneys, and other professionals and all court or arbitration or other dispute resolution costs) arising out of or relating to

such Work or other action. It is not Contractor's responsibility to make certain that the Work described in the Contract Documents is in accordance with Laws and Regulations, but this does not relieve Contractor of its obligations under Paragraph 3.03.

C. Owner or Contractor may give written notice to the other party of any changes after the submission of Contractor's Bid (or after the date when Contractor became bound under a negotiated contract) in Laws or Regulations having an effect on the cost or time of performance of the Work, including but not limited to changes in Laws or Regulations having an effect on procuring permits and on sales, use, value-added, consumption, and other similar taxes. If Owner and Contractor are unable to agree on entitlement to or on the amount or extent, if any, of any adjustment in Contract Price or Contract Times resulting from such changes, then within 30 days of such written notice Contractor may submit a Change Proposal, or Owner may initiate a Claim.

7.12 *Record Documents*

A. Contractor shall maintain in a safe place at the Site one printed record copy of all Drawings, Specifications, Addenda, Change Orders, Work Change Directives, Field Orders, written interpretations and clarifications, and approved Shop Drawings. Contractor shall keep such record documents in good order and annotate them to show changes made during construction. These record documents, together with all approved Samples, will be available to Engineer for reference. Upon completion of the Work, Contractor shall deliver these record documents to Engineer.

7.13 *Safety and Protection*

A. Contractor shall be solely responsible for initiating, maintaining, and supervising all safety precautions and programs in connection with the Work. Such responsibility does not relieve Subcontractors of their responsibility for the safety of persons or property in the performance of their work, nor for compliance with applicable safety Laws and Regulations.

B. Contractor shall designate a qualified and experienced safety representative whose duties and responsibilities are the prevention of Work-related accidents and the maintenance and supervision of safety precautions and programs.

C. Contractor shall take all necessary precautions for the safety of, and shall provide the necessary protection to prevent damage, injury, or loss to:

1. all persons on the Site or who may be affected by the Work;

2. all the Work and materials and equipment to be incorporated therein, whether in storage on or off the Site; and

3. other property at the Site or adjacent thereto, including trees, shrubs, lawns, walks, pavements, roadways, structures, other work in progress, utilities, and Underground Facilities not designated for removal, relocation, or replacement in the course of construction.

D. All damage, injury, or loss to any property referred to in Paragraph 7.13.C.2 or 7.13.C.3 caused, directly or indirectly, in whole or in part, by Contractor, any Subcontractor, Supplier, or any other individual or entity directly or indirectly employed by any of them to perform any of the Work, or anyone for whose acts any of them may be liable, shall be remedied by Contractor at its expense (except damage or loss attributable to the fault of Drawings or Specifications or to the acts or omissions of Owner or Engineer or anyone employed by any

of them, or anyone for whose acts any of them may be liable, and not attributable, directly or indirectly, in whole or in part, to the fault or negligence of Contractor or any Subcontractor, Supplier, or other individual or entity directly or indirectly employed by any of them).

E. Contractor shall comply with all applicable Laws and Regulations relating to the safety of persons or property, or to the protection of persons or property from damage, injury, or loss; and shall erect and maintain all necessary safeguards for such safety and protection.

F. Contractor shall notify Owner; the owners of adjacent property; the owners of Underground Facilities and other utilities (if the identity of such owners is known to Contractor); and other contractors and utility owners performing work at or adjacent to the Site, in writing, when Contractor knows that prosecution of the Work may affect them, and shall cooperate with them in the protection, removal, relocation, and replacement of their property or work in progress.

G. Contractor shall comply with the applicable requirements of Owner's safety programs, if any. Any Owner's safety programs that are applicable to the Work are identified or included in the Supplementary Conditions or Specifications.

H. Contractor shall inform Owner and Engineer of the specific requirements of Contractor's safety program with which Owner's and Engineer's employees and representatives must comply while at the Site.

I. Contractor's duties and responsibilities for safety and protection will continue until all the Work is completed, Engineer has issued a written notice to Owner and Contractor in accordance with Paragraph 15.06.C that the Work is acceptable, and Contractor has left the Site (except as otherwise expressly provided in connection with Substantial Completion).

J. Contractor's duties and responsibilities for safety and protection will resume whenever Contractor or any Subcontractor or Supplier returns to the Site to fulfill warranty or correction obligations, or to conduct other tasks arising from the Contract Documents.

7.14 *Hazard Communication Programs*

A. Contractor shall be responsible for coordinating any exchange of safety data sheets (formerly known as material safety data sheets) or other hazard communication information required to be made available to or exchanged between or among employers at the Site in accordance with Laws or Regulations.

7.15 *Emergencies*

A. In emergencies affecting the safety or protection of persons or the Work or property at the Site or adjacent thereto, Contractor is obligated to act to prevent damage, injury, or loss. Contractor shall give Engineer prompt written notice if Contractor believes that any significant changes in the Work or variations from the Contract Documents have been caused by an emergency, or are required as a result of Contractor's response to an emergency. If Engineer determines that a change in the Contract Documents is required because of an emergency or Contractor's response, a Work Change Directive or Change Order will be issued.

7.16 *Submittals*

A. *Shop Drawing and Sample Requirements*

1. Before submitting a Shop Drawing or Sample, Contractor shall:

   a. review and coordinate the Shop Drawing or Sample with other Shop Drawings and Samples and with the requirements of the Work and the Contract Documents;

   b. determine and verify:

      1) all field measurements, quantities, dimensions, specified performance and design criteria, installation requirements, materials, catalog numbers, and similar information with respect to the Submittal;

      2) the suitability of all materials and equipment offered with respect to the indicated application, fabrication, shipping, handling, storage, assembly, and installation pertaining to the performance of the Work; and

      3) all information relative to Contractor's responsibilities for means, methods, techniques, sequences, and procedures of construction, and safety precautions and programs incident thereto;

   c. confirm that the Submittal is complete with respect to all related data included in the Submittal.

2. Each Shop Drawing or Sample must bear a stamp or specific written certification that Contractor has satisfied Contractor's obligations under the Contract Documents with respect to Contractor's review of that Submittal, and that Contractor approves the Submittal.

3. With each Shop Drawing or Sample, Contractor shall give Engineer specific written notice of any variations that the Submittal may have from the requirements of the Contract Documents. This notice must be set forth in a written communication separate from the Submittal; and, in addition, in the case of a Shop Drawing by a specific notation made on the Shop Drawing itself.

B. *Submittal Procedures for Shop Drawings and Samples*: Contractor shall label and submit Shop Drawings and Samples to Engineer for review and approval in accordance with the accepted Schedule of Submittals.

1. *Shop Drawings*

   a. Contractor shall submit the number of copies required in the Specifications.

   b. Data shown on the Shop Drawings must be complete with respect to quantities, dimensions, specified performance and design criteria, materials, and similar data to show Engineer the services, materials, and equipment Contractor proposes to provide, and to enable Engineer to review the information for the limited purposes required by Paragraph 7.16.C.

2. *Samples*

   a. Contractor shall submit the number of Samples required in the Specifications.

   b. Contractor shall clearly identify each Sample as to material, Supplier, pertinent data such as catalog numbers, the use for which intended and other data as Engineer

may require to enable Engineer to review the Submittal for the limited purposes required by Paragraph 7.16.C.

3. Where a Shop Drawing or Sample is required by the Contract Documents or the Schedule of Submittals, any related Work performed prior to Engineer's review and approval of the pertinent submittal will be at the sole expense and responsibility of Contractor.

C. *Engineer's Review of Shop Drawings and Samples*

1. Engineer will provide timely review of Shop Drawings and Samples in accordance with the accepted Schedule of Submittals. Engineer's review and approval will be only to determine if the items covered by the Submittals will, after installation or incorporation in the Work, comply with the requirements of the Contract Documents, and be compatible with the design concept of the completed Project as a functioning whole as indicated by the Contract Documents.

2. Engineer's review and approval will not extend to means, methods, techniques, sequences, or procedures of construction, or to safety precautions or programs incident thereto.

3. Engineer's review and approval of a separate item as such will not indicate approval of the assembly in which the item functions.

4. Engineer's review and approval of a Shop Drawing or Sample will not relieve Contractor from responsibility for any variation from the requirements of the Contract Documents unless Contractor has complied with the requirements of Paragraph 7.16.A.3 and Engineer has given written approval of each such variation by specific written notation thereof incorporated in or accompanying the Shop Drawing or Sample. Engineer will document any such approved variation from the requirements of the Contract Documents in a Field Order or other appropriate Contract modification.

5. Engineer's review and approval of a Shop Drawing or Sample will not relieve Contractor from responsibility for complying with the requirements of Paragraphs 7.16.A and B.

6. Engineer's review and approval of a Shop Drawing or Sample, or of a variation from the requirements of the Contract Documents, will not, under any circumstances, change the Contract Times or Contract Price, unless such changes are included in a Change Order.

7. Neither Engineer's receipt, review, acceptance, or approval of a Shop Drawing or Sample will result in such item becoming a Contract Document.

8. Contractor shall perform the Work in compliance with the requirements and commitments set forth in approved Shop Drawings and Samples, subject to the provisions of Paragraph 7.16.C.4.

D. *Resubmittal Procedures for Shop Drawings and Samples*

1. Contractor shall make corrections required by Engineer and shall return the required number of corrected copies of Shop Drawings and submit, as required, new Samples for review and approval. Contractor shall direct specific attention in writing to revisions other than the corrections called for by Engineer on previous Submittals.

2. Contractor shall furnish required Shop Drawing and Sample submittals with sufficient information and accuracy to obtain required approval of an item with no more than two

resubmittals. Engineer will record Engineer's time for reviewing a third or subsequent resubmittal of a Shop Drawing or Sample, and Contractor shall be responsible for Engineer's charges to Owner for such time. Owner may impose a set-off against payments due Contractor to secure reimbursement for such charges.

3. If Contractor requests a change of a previously approved Shop Drawing or Sample, Contractor shall be responsible for Engineer's charges to Owner for its review time, and Owner may impose a set-off against payments due Contractor to secure reimbursement for such charges, unless the need for such change is beyond the control of Contractor.

E. *Submittals Other than Shop Drawings, Samples, and Owner-Delegated Designs*

1. The following provisions apply to all Submittals other than Shop Drawings, Samples, and Owner-delegated designs:

a. Contractor shall submit all such Submittals to the Engineer in accordance with the Schedule of Submittals and pursuant to the applicable terms of the Contract Documents.

b. Engineer will provide timely review of all such Submittals in accordance with the Schedule of Submittals and return such Submittals with a notation of either Accepted or Not Accepted. Any such Submittal that is not returned within the time established in the Schedule of Submittals will be deemed accepted.

c. Engineer's review will be only to determine if the Submittal is acceptable under the requirements of the Contract Documents as to general form and content of the Submittal.

d. If any such Submittal is not accepted, Contractor shall confer with Engineer regarding the reason for the non-acceptance, and resubmit an acceptable document.

2. Procedures for the submittal and acceptance of the Progress Schedule, the Schedule of Submittals, and the Schedule of Values are set forth in Paragraphs 2.03. 2.04, and 2.05.

F. Owner-delegated Designs: Submittals pursuant to Owner-delegated designs are governed by the provisions of Paragraph 7.19.

7.17 *Contractor's General Warranty and Guarantee*

A. Contractor warrants and guarantees to Owner that all Work will be in accordance with the Contract Documents and will not be defective. Engineer is entitled to rely on Contractor's warranty and guarantee.

B. Owner's rights under this warranty and guarantee are in addition to, and are not limited by, Owner's rights under the correction period provisions of Paragraph 15.08. The time in which Owner may enforce its warranty and guarantee rights under this Paragraph 7.17 is limited only by applicable Laws and Regulations restricting actions to enforce such rights; provided, however, that after the end of the correction period under Paragraph 15.08:

1. Owner shall give Contractor written notice of any defective Work within 60 days of the discovery that such Work is defective; and

2. Such notice will be deemed the start of an event giving rise to a Claim under Paragraph 12.01.B, such that any related Claim must be brought within 30 days of the notice.

C. Contractor's warranty and guarantee hereunder excludes defects or damage caused by:

1. abuse, or improper modification, maintenance, or operation, by persons other than Contractor, Subcontractors, Suppliers, or any other individual or entity for whom Contractor is responsible; or

2. normal wear and tear under normal usage.

D. Contractor's obligation to perform and complete the Work in accordance with the Contract Documents is absolute. None of the following will constitute an acceptance of Work that is not in accordance with the Contract Documents, a release of Contractor's obligation to perform the Work in accordance with the Contract Documents, or a release of Owner's warranty and guarantee rights under this Paragraph 7.17:

1. Observations by Engineer;

2. Recommendation by Engineer or payment by Owner of any progress or final payment;

3. The issuance of a certificate of Substantial Completion by Engineer or any payment related thereto by Owner;

4. Use or occupancy of the Work or any part thereof by Owner;

5. Any review and approval of a Shop Drawing or Sample submittal;

6. The issuance of a notice of acceptability by Engineer;

7. The end of the correction period established in Paragraph 15.08;

8. Any inspection, test, or approval by others; or

9. Any correction of defective Work by Owner.

E. If the Contract requires the Contractor to accept the assignment of a contract entered into by Owner, then the specific warranties, guarantees, and correction obligations contained in the assigned contract will govern with respect to Contractor's performance obligations to Owner for the Work described in the assigned contract.

7.18 *Indemnification*

A. To the fullest extent permitted by Laws and Regulations, and in addition to any other obligations of Contractor under the Contract or otherwise, Contractor shall indemnify and hold harmless Owner and Engineer, and the officers, directors, members, partners, employees, agents, consultants and subcontractors of each and any of them, from losses, damages, costs, and judgments (including but not limited to all fees and charges of engineers, architects, attorneys, and other professionals, and all court or arbitration or other dispute resolution costs) arising from third-party claims or actions relating to or resulting from the performance or furnishing of the Work, provided that any such claim, action, loss, cost, judgment or damage is attributable to bodily injury, sickness, disease, or death, or to damage to or destruction of tangible property (other than the Work itself), including the loss of use resulting therefrom, but only to the extent caused by any negligent act or omission of Contractor, any Subcontractor, any Supplier, or any individual or entity

directly or indirectly employed by any of them to perform any of the Work, or anyone for whose acts any of them may be liable.

B. In any and all claims against Owner or Engineer, or any of their officers, directors, members, partners, employees, agents, consultants, or subcontractors, by any employee (or the survivor or personal representative of such employee) of Contractor, any Subcontractor, any Supplier, or any individual or entity directly or indirectly employed by any of them to perform any of the Work, or anyone for whose acts any of them may be liable, the indemnification obligation under Paragraph 7.18.A will not be limited in any way by any limitation on the amount or type of damages, compensation, or benefits payable by or for Contractor or any such Subcontractor, Supplier, or other individual or entity under workers' compensation acts, disability benefit acts, or other employee benefit acts.

7.19 *Delegation of Professional Design Services*

A. Owner may require Contractor to provide professional design services for a portion of the Work by express delegation in the Contract Documents. Such delegation will specify the performance and design criteria that such services must satisfy, and the Submittals that Contractor must furnish to Engineer with respect to the Owner-delegated design.

B. Contractor shall cause such Owner-delegated professional design services to be provided pursuant to the professional standard of care by a properly licensed design professional, whose signature and seal must appear on all drawings, calculations, specifications, certifications, and Submittals prepared by such design professional. Such design professional must issue all certifications of design required by Laws and Regulations.

C. If a Shop Drawing or other Submittal related to the Owner-delegated design is prepared by Contractor, a Subcontractor, or others for submittal to Engineer, then such Shop Drawing or other Submittal must bear the written approval of Contractor's design professional when submitted by Contractor to Engineer.

D. Owner and Engineer shall be entitled to rely upon the adequacy, accuracy, and completeness of the services, certifications, and approvals performed or provided by the design professionals retained or employed by Contractor under an Owner-delegated design, subject to the professional standard of care and the performance and design criteria stated in the Contract Documents.

E. Pursuant to this Paragraph 7.19, Engineer's review, approval, and other determinations regarding design drawings, calculations, specifications, certifications, and other Submittals furnished by Contractor pursuant to an Owner-delegated design will be only for the following limited purposes:

1. Checking for conformance with the requirements of this Paragraph 7.19;

2. Confirming that Contractor (through its design professionals) has used the performance and design criteria specified in the Contract Documents; and

3. Establishing that the design furnished by Contractor is consistent with the design concept expressed in the Contract Documents.

F. Contractor shall not be responsible for the adequacy of performance or design criteria specified by Owner or Engineer.

G. Contractor is not required to provide professional services in violation of applicable Laws and Regulations.

ARTICLE 8—OTHER WORK AT THE SITE

8.01 *Other Work*

A. In addition to and apart from the Work under the Contract Documents, the Owner may perform other work at or adjacent to the Site. Such other work may be performed by Owner's employees, or through contracts between the Owner and third parties. Owner may also arrange to have third-party utility owners perform work on their utilities and facilities at or adjacent to the Site.

B. If Owner performs other work at or adjacent to the Site with Owner's employees, or through contracts for such other work, then Owner shall give Contractor written notice thereof prior to starting any such other work. If Owner has advance information regarding the start of any third-party utility work that Owner has arranged to take place at or adjacent to the Site, Owner shall provide such information to Contractor.

C. Contractor shall afford proper and safe access to the Site to each contractor that performs such other work, each utility owner performing other work, and Owner, if Owner is performing other work with Owner's employees, and provide a reasonable opportunity for the introduction and storage of materials and equipment and the execution of such other work.

D. Contractor shall do all cutting, fitting, and patching of the Work that may be required to properly connect or otherwise make its several parts come together and properly integrate with such other work. Contractor shall not endanger any work of others by cutting, excavating, or otherwise altering such work; provided, however, that Contractor may cut or alter others' work with the written consent of Engineer and the others whose work will be affected.

E. If the proper execution or results of any part of Contractor's Work depends upon work performed by others, Contractor shall inspect such other work and promptly report to Engineer in writing any delays, defects, or deficiencies in such other work that render it unavailable or unsuitable for the proper execution and results of Contractor's Work. Contractor's failure to so report will constitute an acceptance of such other work as fit and proper for integration with Contractor's Work except for latent defects and deficiencies in such other work.

F. The provisions of this article are not applicable to work that is performed by third-party utilities or other third-party entities without a contract with Owner, or that is performed without having been arranged by Owner. If such work occurs, then any related delay, disruption, or interference incurred by Contractor is governed by the provisions of Paragraph 4.05.C.3.

8.02 *Coordination*

A. If Owner intends to contract with others for the performance of other work at or adjacent to the Site, to perform other work at or adjacent to the Site with Owner's employees, or to arrange to have utility owners perform work at or adjacent to the Site, the following will be

set forth in the Supplementary Conditions or provided to Contractor prior to the start of any such other work:

1. The identity of the individual or entity that will have authority and responsibility for coordination of the activities among the various contractors;
2. An itemization of the specific matters to be covered by such authority and responsibility; and
3. The extent of such authority and responsibilities.

B. Unless otherwise provided in the Supplementary Conditions, Owner shall have sole authority and responsibility for such coordination.

8.03 *Legal Relationships*

A. If, in the course of performing other work for Owner at or adjacent to the Site, the Owner's employees, any other contractor working for Owner, or any utility owner that Owner has arranged to perform work, causes damage to the Work or to the property of Contractor or its Subcontractors, or delays, disrupts, interferes with, or increases the scope or cost of the performance of the Work, through actions or inaction, then Contractor shall be entitled to an equitable adjustment in the Contract Price or the Contract Times. Contractor must submit any Change Proposal seeking an equitable adjustment in the Contract Price or the Contract Times under this paragraph within 30 days of the damaging, delaying, disrupting, or interfering event. The entitlement to, and extent of, any such equitable adjustment will take into account information (if any) regarding such other work that was provided to Contractor in the Contract Documents prior to the submittal of the Bid or the final negotiation of the terms of the Contract, and any remedies available to Contractor under Laws or Regulations concerning utility action or inaction. When applicable, any such equitable adjustment in Contract Price will be conditioned on Contractor assigning to Owner all Contractor's rights against such other contractor or utility owner with respect to the damage, delay, disruption, or interference that is the subject of the adjustment. Contractor's entitlement to an adjustment of the Contract Times or Contract Price is subject to the provisions of Paragraphs 4.05.D and 4.05.E.

B. Contractor shall take reasonable and customary measures to avoid damaging, delaying, disrupting, or interfering with the work of Owner, any other contractor, or any utility owner performing other work at or adjacent to the Site.

1. If Contractor fails to take such measures and as a result damages, delays, disrupts, or interferes with the work of any such other contractor or utility owner, then Owner may impose a set-off against payments due Contractor, and assign to such other contractor or utility owner the Owner's contractual rights against Contractor with respect to the breach of the obligations set forth in this Paragraph 8.03.B.
2. When Owner is performing other work at or adjacent to the Site with Owner's employees, Contractor shall be liable to Owner for damage to such other work, and for the reasonable direct delay, disruption, and interference costs incurred by Owner as a result of Contractor's failure to take reasonable and customary measures with respect to Owner's other work. In response to such damage, delay, disruption, or interference, Owner may impose a set-off against payments due Contractor.

C. If Contractor damages, delays, disrupts, or interferes with the work of any other contractor, or any utility owner performing other work at or adjacent to the Site, through Contractor's failure to take reasonable and customary measures to avoid such impacts, or if any claim arising out of Contractor's actions, inactions, or negligence in performance of the Work at or adjacent to the Site is made by any such other contractor or utility owner against Contractor, Owner, or Engineer, then Contractor shall (1) promptly attempt to settle the claim as to all parties through negotiations with such other contractor or utility owner, or otherwise resolve the claim by arbitration or other dispute resolution proceeding or at law, and (2) indemnify and hold harmless Owner and Engineer, and the officers, directors, members, partners, employees, agents, consultants and subcontractors of each and any of them from and against any such claims, and against all costs, losses, and damages (including but not limited to all fees and charges of engineers, architects, attorneys, and other professionals and all court or arbitration or other dispute resolution costs) arising out of or relating to such damage, delay, disruption, or interference.

ARTICLE 9—OWNER'S RESPONSIBILITIES

9.01 *Communications to Contractor*

A. Except as otherwise provided in these General Conditions, Owner shall issue all communications to Contractor through Engineer.

9.02 *Replacement of Engineer*

A. Owner may at its discretion appoint an engineer to replace Engineer, provided Contractor makes no reasonable objection to the replacement engineer. The replacement engineer's status under the Contract Documents will be that of the former Engineer.

9.03 *Furnish Data*

A. Owner shall promptly furnish the data required of Owner under the Contract Documents.

9.04 *Pay When Due*

A. Owner shall make payments to Contractor when they are due as provided in the Agreement.

9.05 *Lands and Easements; Reports, Tests, and Drawings*

A. Owner's duties with respect to providing lands and easements are set forth in Paragraph 5.01.

B. Owner's duties with respect to providing engineering surveys to establish reference points are set forth in Paragraph 4.03.

C. Article 5 refers to Owner's identifying and making available to Contractor copies of reports of explorations and tests of conditions at the Site, and drawings of physical conditions relating to existing surface or subsurface structures at the Site.

9.06 *Insurance*

A. Owner's responsibilities, if any, with respect to purchasing and maintaining liability and property insurance are set forth in Article 6.

9.07 *Change Orders*

A. Owner's responsibilities with respect to Change Orders are set forth in Article 11.

9.08 *Inspections, Tests, and Approvals*

A. Owner's responsibility with respect to certain inspections, tests, and approvals is set forth in Paragraph 14.02.B.

9.09 *Limitations on Owner's Responsibilities*

A. The Owner shall not supervise, direct, or have control or authority over, nor be responsible for, Contractor's means, methods, techniques, sequences, or procedures of construction, or the safety precautions and programs incident thereto, or for any failure of Contractor to comply with Laws and Regulations applicable to the performance of the Work. Owner will not be responsible for Contractor's failure to perform the Work in accordance with the Contract Documents.

9.10 *Undisclosed Hazardous Environmental Condition*

A. Owner's responsibility in respect to an undisclosed Hazardous Environmental Condition is set forth in Paragraph 5.06.

9.11 *Evidence of Financial Arrangements*

A. Upon request of Contractor, Owner shall furnish Contractor reasonable evidence that financial arrangements have been made to satisfy Owner's obligations under the Contract (including obligations under proposed changes in the Work).

9.12 *Safety Programs*

A. While at the Site, Owner's employees and representatives shall comply with the specific applicable requirements of Contractor's safety programs of which Owner has been informed.

B. Owner shall furnish copies of any applicable Owner safety programs to Contractor.

ARTICLE 10—ENGINEER'S STATUS DURING CONSTRUCTION

10.01 *Owner's Representative*

A. Engineer will be Owner's representative during the construction period. The duties and responsibilities and the limitations of authority of Engineer as Owner's representative during construction are set forth in the Contract.

10.02 *Visits to Site*

A. Engineer will make visits to the Site at intervals appropriate to the various stages of construction as Engineer deems necessary in order to observe, as an experienced and qualified design professional, the progress that has been made and the quality of the various aspects of Contractor's executed Work. Based on information obtained during such visits and observations, Engineer, for the benefit of Owner, will determine, in general, if the Work is proceeding in accordance with the Contract Documents. Engineer will not be required to make exhaustive or continuous inspections on the Site to check the quality or quantity of the Work. Engineer's efforts will be directed toward providing for Owner a greater degree of confidence that the completed Work will conform generally to the Contract Documents. On the basis of such visits and observations, Engineer will keep Owner informed of the progress of the Work and will endeavor to guard Owner against defective Work.

B. Engineer's visits and observations are subject to all the limitations on Engineer's authority and responsibility set forth in Paragraph 10.07. Particularly, but without limitation, during or as a result of Engineer's visits or observations of Contractor's Work, Engineer will not supervise, direct, control, or have authority over or be responsible for Contractor's means, methods, techniques, sequences, or procedures of construction, or the safety precautions and programs incident thereto, or for any failure of Contractor to comply with Laws and Regulations applicable to the performance of the Work.

10.03 *Resident Project Representative*

A. If Owner and Engineer have agreed that Engineer will furnish a Resident Project Representative to represent Engineer at the Site and assist Engineer in observing the progress and quality of the Work, then the authority and responsibilities of any such Resident Project Representative will be as provided in the Supplementary Conditions, and limitations on the responsibilities thereof will be as provided in the Supplementary Conditions and in Paragraph 10.07.

B. If Owner designates an individual or entity who is not Engineer's consultant, agent, or employee to represent Owner at the Site, then the responsibilities and authority of such individual or entity will be as provided in the Supplementary Conditions.

10.04 *Engineer's Authority*

A. Engineer has the authority to reject Work in accordance with Article 14.

B. Engineer's authority as to Submittals is set forth in Paragraph 7.16.

C. Engineer's authority as to design drawings, calculations, specifications, certifications and other Submittals from Contractor in response to Owner's delegation (if any) to Contractor of professional design services, is set forth in Paragraph 7.19.

D. Engineer's authority as to changes in the Work is set forth in Article 11.

E. Engineer's authority as to Applications for Payment is set forth in Article 15.

10.05 *Determinations for Unit Price Work*

A. Engineer will determine the actual quantities and classifications of Unit Price Work performed by Contractor as set forth in Paragraph 13.03.

10.06 *Decisions on Requirements of Contract Documents and Acceptability of Work*

A. Engineer will render decisions regarding the requirements of the Contract Documents, and judge the acceptability of the Work, pursuant to the specific procedures set forth herein for initial interpretations, Change Proposals, and acceptance of the Work. In rendering such decisions and judgments, Engineer will not show partiality to Owner or Contractor, and will not be liable to Owner, Contractor, or others in connection with any proceedings, interpretations, decisions, or judgments conducted or rendered in good faith.

10.07 *Limitations on Engineer's Authority and Responsibilities*

A. Neither Engineer's authority or responsibility under this Article 10 or under any other provision of the Contract, nor any decision made by Engineer in good faith either to exercise or not exercise such authority or responsibility or the undertaking, exercise, or performance of any authority or responsibility by Engineer, will create, impose, or give rise to any duty in contract, tort, or otherwise owed by Engineer to Contractor, any Subcontractor, any

Supplier, any other individual or entity, or to any surety for or employee or agent of any of them.

B. Engineer will not supervise, direct, control, or have authority over or be responsible for Contractor's means, methods, techniques, sequences, or procedures of construction, or the safety precautions and programs incident thereto, or for any failure of Contractor to comply with Laws and Regulations applicable to the performance of the Work. Engineer will not be responsible for Contractor's failure to perform the Work in accordance with the Contract Documents.

C. Engineer will not be responsible for the acts or omissions of Contractor or of any Subcontractor, any Supplier, or of any other individual or entity performing any of the Work.

D. Engineer's review of the final Application for Payment and accompanying documentation, and all maintenance and operating instructions, schedules, guarantees, bonds, certificates of inspection, tests and approvals, and other documentation required to be delivered by Contractor under Paragraph 15.06.A, will only be to determine generally that their content complies with the requirements of, and in the case of certificates of inspections, tests, and approvals, that the results certified indicate compliance with the Contract Documents.

E. The limitations upon authority and responsibility set forth in this Paragraph 10.07 also apply to the Resident Project Representative, if any.

10.08 *Compliance with Safety Program*

A. While at the Site, Engineer's employees and representatives will comply with the specific applicable requirements of Owner's and Contractor's safety programs of which Engineer has been informed.

ARTICLE 11—CHANGES TO THE CONTRACT

11.01 *Amending and Supplementing the Contract*

A. The Contract may be amended or supplemented by a Change Order, a Work Change Directive, or a Field Order.

B. If an amendment or supplement to the Contract includes a change in the Contract Price or the Contract Times, such amendment or supplement must be set forth in a Change Order.

C. All changes to the Contract that involve (1) the performance or acceptability of the Work, (2) the design (as set forth in the Drawings, Specifications, or otherwise), or (3) other engineering or technical matters, must be supported by Engineer's recommendation. Owner and Contractor may amend other terms and conditions of the Contract without the recommendation of the Engineer.

11.02 *Change Orders*

A. Owner and Contractor shall execute appropriate Change Orders covering:

1. Changes in Contract Price or Contract Times which are agreed to by the parties, including any undisputed sum or amount of time for Work actually performed in accordance with a Work Change Directive;

2. Changes in Contract Price resulting from an Owner set-off, unless Contractor has duly contested such set-off;

3. Changes in the Work which are: (a) ordered by Owner pursuant to Paragraph 11.05, (b) required because of Owner's acceptance of defective Work under Paragraph 14.04 or Owner's correction of defective Work under Paragraph 14.07, or (c) agreed to by the parties, subject to the need for Engineer's recommendation if the change in the Work involves the design (as set forth in the Drawings, Specifications, or otherwise) or other engineering or technical matters; and

4. Changes that embody the substance of any final and binding results under: Paragraph 11.03.B, resolving the impact of a Work Change Directive; Paragraph 11.09, concerning Change Proposals; Article 12, Claims; Paragraph 13.02.D, final adjustments resulting from allowances; Paragraph 13.03.D, final adjustments relating to determination of quantities for Unit Price Work; and similar provisions.

B. If Owner or Contractor refuses to execute a Change Order that is required to be executed under the terms of Paragraph 11.02.A, it will be deemed to be of full force and effect, as if fully executed.

11.03 *Work Change Directives*

A. A Work Change Directive will not change the Contract Price or the Contract Times but is evidence that the parties expect that the modification ordered or documented by a Work Change Directive will be incorporated in a subsequently issued Change Order, following negotiations by the parties as to the Work Change Directive's effect, if any, on the Contract Price and Contract Times; or, if negotiations are unsuccessful, by a determination under the terms of the Contract Documents governing adjustments, expressly including Paragraph 11.07 regarding change of Contract Price.

B. If Owner has issued a Work Change Directive and:

1. Contractor believes that an adjustment in Contract Times or Contract Price is necessary, then Contractor shall submit any Change Proposal seeking such an adjustment no later than 30 days after the completion of the Work set out in the Work Change Directive.

2. Owner believes that an adjustment in Contract Times or Contract Price is necessary, then Owner shall submit any Claim seeking such an adjustment no later than 60 days after issuance of the Work Change Directive.

11.04 *Field Orders*

A. Engineer may authorize minor changes in the Work if the changes do not involve an adjustment in the Contract Price or the Contract Times and are compatible with the design concept of the completed Project as a functioning whole as indicated by the Contract Documents. Such changes will be accomplished by a Field Order and will be binding on Owner and also on Contractor, which shall perform the Work involved promptly.

B. If Contractor believes that a Field Order justifies an adjustment in the Contract Price or Contract Times, then before proceeding with the Work at issue, Contractor shall submit a Change Proposal as provided herein.

11.05 *Owner-Authorized Changes in the Work*

A. Without invalidating the Contract and without notice to any surety, Owner may, at any time or from time to time, order additions, deletions, or revisions in the Work. Changes involving

the design (as set forth in the Drawings, Specifications, or otherwise) or other engineering or technical matters will be supported by Engineer's recommendation.

B. Such changes in the Work may be accomplished by a Change Order, if Owner and Contractor have agreed as to the effect, if any, of the changes on Contract Times or Contract Price; or by a Work Change Directive. Upon receipt of any such document, Contractor shall promptly proceed with the Work involved; or, in the case of a deletion in the Work, promptly cease construction activities with respect to such deleted Work. Added or revised Work must be performed under the applicable conditions of the Contract Documents.

C. Nothing in this Paragraph 11.05 obligates Contractor to undertake work that Contractor reasonably concludes cannot be performed in a manner consistent with Contractor's safety obligations under the Contract Documents or Laws and Regulations.

11.06 *Unauthorized Changes in the Work*

A. Contractor shall not be entitled to an increase in the Contract Price or an extension of the Contract Times with respect to any work performed that is not required by the Contract Documents, as amended, modified, or supplemented, except in the case of an emergency as provided in Paragraph 7.15 or in the case of uncovering Work as provided in Paragraph 14.05.C.2.

11.07 *Change of Contract Price*

A. The Contract Price may only be changed by a Change Order. Any Change Proposal for an adjustment in the Contract Price must comply with the provisions of Paragraph 11.09. Any Claim for an adjustment of Contract Price must comply with the provisions of Article 12.

B. An adjustment in the Contract Price will be determined as follows:

1. Where the Work involved is covered by unit prices contained in the Contract Documents, then by application of such unit prices to the quantities of the items involved (subject to the provisions of Paragraph 13.03);

2. Where the Work involved is not covered by unit prices contained in the Contract Documents, then by a mutually agreed lump sum (which may include an allowance for overhead and profit not necessarily in accordance with Paragraph 11.07.C.2); or

3. Where the Work involved is not covered by unit prices contained in the Contract Documents and the parties do not reach mutual agreement to a lump sum, then on the basis of the Cost of the Work (determined as provided in Paragraph 13.01) plus a Contractor's fee for overhead and profit (determined as provided in Paragraph 11.07.C).

C. *Contractor's Fee*: When applicable, the Contractor's fee for overhead and profit will be determined as follows:

1. A mutually acceptable fixed fee; or

2. If a fixed fee is not agreed upon, then a fee based on the following percentages of the various portions of the Cost of the Work:

a. For costs incurred under Paragraphs 13.01.B.1 and 13.01.B.2, the Contractor's fee will be 15 percent;

b. For costs incurred under Paragraph 13.01.B.3, the Contractor's fee will be 5 percent;

c. Where one or more tiers of subcontracts are on the basis of Cost of the Work plus a fee and no fixed fee is agreed upon, the intent of Paragraphs 11.07.C.2.a and 11.07.C.2.b is that the Contractor's fee will be based on: (1) a fee of 15 percent of the costs incurred under Paragraphs 13.01.B.1 and 13.01.B.2 by the Subcontractor that actually performs the Work, at whatever tier, and (2) with respect to Contractor itself and to any Subcontractors of a tier higher than that of the Subcontractor that actually performs the Work, a fee of 5 percent of the amount (fee plus underlying costs incurred) attributable to the next lower tier Subcontractor; provided, however, that for any such subcontracted Work the maximum total fee to be paid by Owner will be no greater than 27 percent of the costs incurred by the Subcontractor that actually performs the Work;

d. No fee will be payable on the basis of costs itemized under Paragraphs 13.01.B.4, 13.01.B.5, and 13.01.C;

e. The amount of credit to be allowed by Contractor to Owner for any change which results in a net decrease in Cost of the Work will be the amount of the actual net decrease in Cost of the Work and a deduction of an additional amount equal to 5 percent of such actual net decrease in Cost of the Work; and

f. When both additions and credits are involved in any one change or Change Proposal, the adjustment in Contractor's fee will be computed by determining the sum of the costs in each of the cost categories in Paragraph 13.01.B (specifically, payroll costs, Paragraph 13.01.B.1; incorporated materials and equipment costs, Paragraph 13.01.B.2; Subcontract costs, Paragraph 13.01.B.3; special consultants costs, Paragraph 13.01.B.4; and other costs, Paragraph 13.01.B.5) and applying to each such cost category sum the appropriate fee from Paragraphs 11.07.C.2.a through 11.07.C.2.e, inclusive.

11.08 *Change of Contract Times*

A. The Contract Times may only be changed by a Change Order. Any Change Proposal for an adjustment in the Contract Times must comply with the provisions of Paragraph 11.09. Any Claim for an adjustment in the Contract Times must comply with the provisions of Article 12.

B. Delay, disruption, and interference in the Work, and any related changes in Contract Times, are addressed in and governed by Paragraph 4.05.

11.09 *Change Proposals*

A. *Purpose and Content*: Contractor shall submit a Change Proposal to Engineer to request an adjustment in the Contract Times or Contract Price; contest an initial decision by Engineer concerning the requirements of the Contract Documents or relating to the acceptability of the Work under the Contract Documents; challenge a set-off against payment due; or seek other relief under the Contract. The Change Proposal will specify any proposed change in Contract Times or Contract Price, or other proposed relief, and explain the reason for the proposed change, with citations to any governing or applicable provisions of the Contract Documents. Each Change Proposal will address only one issue, or a set of closely related issues.

B. *Change Proposal Procedures*

1. *Submittal*: Contractor shall submit each Change Proposal to Engineer within 30 days after the start of the event giving rise thereto, or after such initial decision.

2. *Supporting Data*: The Contractor shall submit supporting data, including the proposed change in Contract Price or Contract Time (if any), to the Engineer and Owner within 15 days after the submittal of the Change Proposal.

   a. Change Proposals based on or related to delay, interruption, or interference must comply with the provisions of Paragraphs 4.05.D and 4.05.E.

   b. Change proposals related to a change of Contract Price must include full and detailed accounts of materials incorporated into the Work and labor and equipment used for the subject Work.

   The supporting data must be accompanied by a written statement that the supporting data are accurate and complete, and that any requested time or price adjustment is the entire adjustment to which Contractor believes it is entitled as a result of said event.

3. *Engineer's Initial Review*: Engineer will advise Owner regarding the Change Proposal, and consider any comments or response from Owner regarding the Change Proposal. If in its discretion Engineer concludes that additional supporting data is needed before conducting a full review and making a decision regarding the Change Proposal, then Engineer may request that Contractor submit such additional supporting data by a date specified by Engineer, prior to Engineer beginning its full review of the Change Proposal.

4. *Engineer's Full Review and Action on the Change Proposal*: Upon receipt of Contractor's supporting data (including any additional data requested by Engineer), Engineer will conduct a full review of each Change Proposal and, within 30 days after such receipt of the Contractor's supporting data, either approve the Change Proposal in whole, deny it in whole, or approve it in part and deny it in part. Such actions must be in writing, with a copy provided to Owner and Contractor. If Engineer does not take action on the Change Proposal within 30 days, then either Owner or Contractor may at any time thereafter submit a letter to the other party indicating that as a result of Engineer's inaction the Change Proposal is deemed denied, thereby commencing the time for appeal of the denial under Article 12.

5. *Binding Decision*: Engineer's decision is final and binding upon Owner and Contractor, unless Owner or Contractor appeals the decision by filing a Claim under Article 12.

C. *Resolution of Certain Change Proposals*: If the Change Proposal does not involve the design (as set forth in the Drawings, Specifications, or otherwise), the acceptability of the Work, or other engineering or technical matters, then Engineer will notify the parties in writing that the Engineer is unable to resolve the Change Proposal. For purposes of further resolution of such a Change Proposal, such notice will be deemed a denial, and Contractor may choose to seek resolution under the terms of Article 12.

D. *Post-Completion*: Contractor shall not submit any Change Proposals after Engineer issues a written recommendation of final payment pursuant to Paragraph 15.06.B.

11.10 *Notification to Surety*

A. If the provisions of any bond require notice to be given to a surety of any change affecting the general scope of the Work or the provisions of the Contract Documents (including, but not limited to, Contract Price or Contract Times), the giving of any such notice will be Contractor's responsibility. The amount of each applicable bond will be adjusted to reflect the effect of any such change.

ARTICLE 12—CLAIMS

12.01 *Claims*

A. *Claims Process*: The following disputes between Owner and Contractor are subject to the Claims process set forth in this article:

1. Appeals by Owner or Contractor of Engineer's decisions regarding Change Proposals;
2. Owner demands for adjustments in the Contract Price or Contract Times, or other relief under the Contract Documents;
3. Disputes that Engineer has been unable to address because they do not involve the design (as set forth in the Drawings, Specifications, or otherwise), the acceptability of the Work, or other engineering or technical matters; and
4. Subject to the waiver provisions of Paragraph 15.07, any dispute arising after Engineer has issued a written recommendation of final payment pursuant to Paragraph 15.06.B.

B. *Submittal of Claim*: The party submitting a Claim shall deliver it directly to the other party to the Contract promptly (but in no event later than 30 days) after the start of the event giving rise thereto; in the case of appeals regarding Change Proposals within 30 days of the decision under appeal. The party submitting the Claim shall also furnish a copy to the Engineer, for its information only. The responsibility to substantiate a Claim rests with the party making the Claim. In the case of a Claim by Contractor seeking an increase in the Contract Times or Contract Price, Contractor shall certify that the Claim is made in good faith, that the supporting data are accurate and complete, and that to the best of Contractor's knowledge and belief the amount of time or money requested accurately reflects the full amount to which Contractor is entitled.

C. *Review and Resolution*: The party receiving a Claim shall review it thoroughly, giving full consideration to its merits. The two parties shall seek to resolve the Claim through the exchange of information and direct negotiations. The parties may extend the time for resolving the Claim by mutual agreement. All actions taken on a Claim will be stated in writing and submitted to the other party, with a copy to Engineer.

D. *Mediation*

1. At any time after initiation of a Claim, Owner and Contractor may mutually agree to mediation of the underlying dispute. The agreement to mediate will stay the Claim submittal and response process.
2. If Owner and Contractor agree to mediation, then after 60 days from such agreement, either Owner or Contractor may unilaterally terminate the mediation process, and the Claim submittal and decision process will resume as of the date of the termination. If the mediation proceeds but is unsuccessful in resolving the dispute, the Claim submittal

and decision process will resume as of the date of the conclusion of the mediation, as determined by the mediator.

3. Owner and Contractor shall each pay one-half of the mediator's fees and costs.

E. *Partial Approval*: If the party receiving a Claim approves the Claim in part and denies it in part, such action will be final and binding unless within 30 days of such action the other party invokes the procedure set forth in Article 17 for final resolution of disputes.

F. *Denial of Claim*: If efforts to resolve a Claim are not successful, the party receiving the Claim may deny it by giving written notice of denial to the other party. If the receiving party does not take action on the Claim within 90 days, then either Owner or Contractor may at any time thereafter submit a letter to the other party indicating that as a result of the inaction, the Claim is deemed denied, thereby commencing the time for appeal of the denial. A denial of the Claim will be final and binding unless within 30 days of the denial the other party invokes the procedure set forth in Article 17 for the final resolution of disputes.

G. *Final and Binding Results*: If the parties reach a mutual agreement regarding a Claim, whether through approval of the Claim, direct negotiations, mediation, or otherwise; or if a Claim is approved in part and denied in part, or denied in full, and such actions become final and binding; then the results of the agreement or action on the Claim will be incorporated in a Change Order or other written document to the extent they affect the Contract, including the Work, the Contract Times, or the Contract Price.

ARTICLE 13—COST OF THE WORK; ALLOWANCES; UNIT PRICE WORK

13.01 *Cost of the Work*

A. *Purposes for Determination of Cost of the Work*: The term Cost of the Work means the sum of all costs necessary for the proper performance of the Work at issue, as further defined below. The provisions of this Paragraph 13.01 are used for two distinct purposes:

1. To determine Cost of the Work when Cost of the Work is a component of the Contract Price, under cost-plus-fee, time-and-materials, or other cost-based terms; or

2. When needed to determine the value of a Change Order, Change Proposal, Claim, set-off, or other adjustment in Contract Price. When the value of any such adjustment is determined on the basis of Cost of the Work, Contractor is entitled only to those additional or incremental costs required because of the change in the Work or because of the event giving rise to the adjustment.

B. *Costs Included*: Except as otherwise may be agreed to in writing by Owner, costs included in the Cost of the Work will be in amounts no higher than those commonly incurred in the locality of the Project, will not include any of the costs itemized in Paragraph 13.01.C, and will include only the following items:

1. Payroll costs for employees in the direct employ of Contractor in the performance of the Work under schedules of job classifications agreed upon by Owner and Contractor in advance of the subject Work. Such employees include, without limitation, superintendents, foremen, safety managers, safety representatives, and other personnel employed full time on the Work. Payroll costs for employees not employed full time on the Work will be apportioned on the basis of their time spent on the Work. Payroll costs include, but are not limited to, salaries and wages plus the cost of fringe

benefits, which include social security contributions, unemployment, excise, and payroll taxes, workers' compensation, health and retirement benefits, sick leave, and vacation and holiday pay applicable thereto. The expenses of performing Work outside of regular working hours, on Saturday, Sunday, or legal holidays, will be included in the above to the extent authorized by Owner.

2. Cost of all materials and equipment furnished and incorporated in the Work, including costs of transportation and storage thereof, and Suppliers' field services required in connection therewith. All cash discounts accrue to Contractor unless Owner deposits funds with Contractor with which to make payments, in which case the cash discounts will accrue to Owner. All trade discounts, rebates, and refunds and returns from sale of surplus materials and equipment will accrue to Owner, and Contractor shall make provisions so that they may be obtained.

3. Payments made by Contractor to Subcontractors for Work performed by Subcontractors. If required by Owner, Contractor shall obtain competitive bids from subcontractors acceptable to Owner and Contractor and shall deliver such bids to Owner, which will then determine, with the advice of Engineer, which bids, if any, will be acceptable. If any subcontract provides that the Subcontractor is to be paid on the basis of Cost of the Work plus a fee, the Subcontractor's Cost of the Work and fee will be determined in the same manner as Contractor's Cost of the Work and fee as provided in this Paragraph 13.01.

4. Costs of special consultants (including but not limited to engineers, architects, testing laboratories, surveyors, attorneys, and accountants) employed or retained for services specifically related to the Work.

5. Other costs consisting of the following:

   a. The proportion of necessary transportation, travel, and subsistence expenses of Contractor's employees incurred in discharge of duties connected with the Work.

   b. Cost, including transportation and maintenance, of all materials, supplies, equipment, machinery, appliances, office, and temporary facilities at the Site, which are consumed in the performance of the Work, and cost, less market value, of such items used but not consumed which remain the property of Contractor.

      1) In establishing included costs for materials such as scaffolding, plating, or sheeting, consideration will be given to the actual or the estimated life of the material for use on other projects; or rental rates may be established on the basis of purchase or salvage value of such items, whichever is less. Contractor will not be eligible for compensation for such items in an amount that exceeds the purchase cost of such item.

   c. *Construction Equipment Rental*

      1) Rentals of all construction equipment and machinery, and the parts thereof, in accordance with rental agreements approved by Owner as to price (including any surcharge or special rates applicable to overtime use of the construction equipment or machinery), and the costs of transportation, loading, unloading, assembly, dismantling, and removal thereof. All such costs will be in accordance with the terms of said rental agreements. The rental of any such equipment,

machinery, or parts must cease when the use thereof is no longer necessary for the Work.

2) Costs for equipment and machinery owned by Contractor or a Contractor-related entity will be paid at a rate shown for such equipment in the equipment rental rate book specified in the Supplementary Conditions. An hourly rate will be computed by dividing the monthly rates by 176. These computed rates will include all operating costs.

3) With respect to Work that is the result of a Change Order, Change Proposal, Claim, set-off, or other adjustment in Contract Price ("changed Work"), included costs will be based on the time the equipment or machinery is in use on the changed Work and the costs of transportation, loading, unloading, assembly, dismantling, and removal when directly attributable to the changed Work. The cost of any such equipment or machinery, or parts thereof, must cease to accrue when the use thereof is no longer necessary for the changed Work.

d. Sales, consumer, use, and other similar taxes related to the Work, and for which Contractor is liable, as imposed by Laws and Regulations.

e. Deposits lost for causes other than negligence of Contractor, any Subcontractor, or anyone directly or indirectly employed by any of them or for whose acts any of them may be liable, and royalty payments and fees for permits and licenses.

f. Losses and damages (and related expenses) caused by damage to the Work, not compensated by insurance or otherwise, sustained by Contractor in connection with the performance of the Work (except losses and damages within the deductible amounts of builder's risk or other property insurance established in accordance with Paragraph 6.04), provided such losses and damages have resulted from causes other than the negligence of Contractor, any Subcontractor, or anyone directly or indirectly employed by any of them or for whose acts any of them may be liable. Such losses include settlements made with the written consent and approval of Owner. No such losses, damages, and expenses will be included in the Cost of the Work for the purpose of determining Contractor's fee.

g. The cost of utilities, fuel, and sanitary facilities at the Site.

h. Minor expenses such as communication service at the Site, express and courier services, and similar petty cash items in connection with the Work.

i. The costs of premiums for all bonds and insurance that Contractor is required by the Contract Documents to purchase and maintain.

C. *Costs Excluded*: The term Cost of the Work does not include any of the following items:

1. Payroll costs and other compensation of Contractor's officers, executives, principals, general managers, engineers, architects, estimators, attorneys, auditors, accountants, purchasing and contracting agents, expediters, timekeepers, clerks, and other personnel employed by Contractor, whether at the Site or in Contractor's principal or branch office for general administration of the Work and not specifically included in the agreed upon schedule of job classifications referred to in Paragraph 13.01.B.1 or specifically covered by Paragraph 13.01.B.4. The payroll costs and other compensation excluded here are to be considered administrative costs covered by the Contractor's fee.

2. The cost of purchasing, renting, or furnishing small tools and hand tools.
3. Expenses of Contractor's principal and branch offices other than Contractor's office at the Site.
4. Any part of Contractor's capital expenses, including interest on Contractor's capital employed for the Work and charges against Contractor for delinquent payments.
5. Costs due to the negligence of Contractor, any Subcontractor, or anyone directly or indirectly employed by any of them or for whose acts any of them may be liable, including but not limited to, the correction of defective Work, disposal of materials or equipment wrongly supplied, and making good any damage to property.
6. Expenses incurred in preparing and advancing Claims.
7. Other overhead or general expense costs of any kind and the costs of any item not specifically and expressly included in Paragraph 13.01.B.

D. *Contractor's Fee*

1. When the Work as a whole is performed on the basis of cost-plus-a-fee, then:
   a. Contractor's fee for the Work set forth in the Contract Documents as of the Effective Date of the Contract will be determined as set forth in the Agreement.
   b. for any Work covered by a Change Order, Change Proposal, Claim, set-off, or other adjustment in Contract Price on the basis of Cost of the Work, Contractor's fee will be determined as follows:
      1) When the fee for the Work as a whole is a percentage of the Cost of the Work, the fee will automatically adjust as the Cost of the Work changes.
      2) When the fee for the Work as a whole is a fixed fee, the fee for any additions or deletions will be determined in accordance with Paragraph 11.07.C.2.
2. When the Work as a whole is performed on the basis of a stipulated sum, or any other basis other than cost-plus-a-fee, then Contractor's fee for any Work covered by a Change Order, Change Proposal, Claim, set-off, or other adjustment in Contract Price on the basis of Cost of the Work will be determined in accordance with Paragraph 11.07.C.2.

E. *Documentation and Audit*: Whenever the Cost of the Work for any purpose is to be determined pursuant to this Article 13, Contractor and pertinent Subcontractors will establish and maintain records of the costs in accordance with generally accepted accounting practices. Subject to prior written notice, Owner will be afforded reasonable access, during normal business hours, to all Contractor's accounts, records, books, correspondence, instructions, drawings, receipts, vouchers, memoranda, and similar data relating to the Cost of the Work and Contractor's fee. Contractor shall preserve all such documents for a period of three years after the final payment by Owner. Pertinent Subcontractors will afford such access to Owner, and preserve such documents, to the same extent required of Contractor.

13.02 *Allowances*

A. It is understood that Contractor has included in the Contract Price all allowances so named in the Contract Documents and shall cause the Work so covered to be performed for such sums and by such persons or entities as may be acceptable to Owner and Engineer.

B. *Cash Allowances*: Contractor agrees that:

1. the cash allowances include the cost to Contractor (less any applicable trade discounts) of materials and equipment required by the allowances to be delivered at the Site, and all applicable taxes; and

2. Contractor's costs for unloading and handling on the Site, labor, installation, overhead, profit, and other expenses contemplated for the cash allowances have been included in the Contract Price and not in the allowances, and no demand for additional payment for any of the foregoing will be valid.

C. *Owner's Contingency Allowance*: Contractor agrees that an Owner's contingency allowance, if any, is for the sole use of Owner to cover unanticipated costs.

D. Prior to final payment, an appropriate Change Order will be issued as recommended by Engineer to reflect actual amounts due Contractor for Work covered by allowances, and the Contract Price will be correspondingly adjusted.

13.03 *Unit Price Work*

A. Where the Contract Documents provide that all or part of the Work is to be Unit Price Work, initially the Contract Price will be deemed to include for all Unit Price Work an amount equal to the sum of the unit price for each separately identified item of Unit Price Work times the estimated quantity of each item as indicated in the Agreement.

B. The estimated quantities of items of Unit Price Work are not guaranteed and are solely for the purpose of comparison of Bids and determining an initial Contract Price. Payments to Contractor for Unit Price Work will be based on actual quantities.

C. Each unit price will be deemed to include an amount considered by Contractor to be adequate to cover Contractor's overhead and profit for each separately identified item.

D. Engineer will determine the actual quantities and classifications of Unit Price Work performed by Contractor. Engineer will review with Contractor the Engineer's preliminary determinations on such matters before rendering a written decision thereon (by recommendation of an Application for Payment or otherwise). Engineer's written decision thereon will be final and binding (except as modified by Engineer to reflect changed factual conditions or more accurate data) upon Owner and Contractor, and the final adjustment of Contract Price will be set forth in a Change Order, subject to the provisions of the following paragraph.

E. *Adjustments in Unit Price*

1. Contractor or Owner shall be entitled to an adjustment in the unit price with respect to an item of Unit Price Work if:

a. the quantity of the item of Unit Price Work performed by Contractor differs materially and significantly from the estimated quantity of such item indicated in the Agreement; and

b. Contractor's unit costs to perform the item of Unit Price Work have changed materially and significantly as a result of the quantity change.

2. The adjustment in unit price will account for and be coordinated with any related changes in quantities of other items of Work, and in Contractor's costs to perform such other Work, such that the resulting overall change in Contract Price is equitable to Owner and Contractor.

3. Adjusted unit prices will apply to all units of that item.

ARTICLE 14—TESTS AND INSPECTIONS; CORRECTION, REMOVAL, OR ACCEPTANCE OF DEFECTIVE WORK

14.01 *Access to Work*

A. Owner, Engineer, their consultants and other representatives and personnel of Owner, independent testing laboratories, and authorities having jurisdiction have access to the Site and the Work at reasonable times for their observation, inspection, and testing. Contractor shall provide them proper and safe conditions for such access and advise them of Contractor's safety procedures and programs so that they may comply with such procedures and programs as applicable.

14.02 *Tests, Inspections, and Approvals*

A. Contractor shall give Engineer timely notice of readiness of the Work (or specific parts thereof) for all required inspections and tests, and shall cooperate with inspection and testing personnel to facilitate required inspections and tests.

B. Owner shall retain and pay for the services of an independent inspector, testing laboratory, or other qualified individual or entity to perform all inspections and tests expressly required by the Contract Documents to be furnished and paid for by Owner, except that costs incurred in connection with tests or inspections of covered Work will be governed by the provisions of Paragraph 14.05.

C. If Laws or Regulations of any public body having jurisdiction require any Work (or part thereof) specifically to be inspected, tested, or approved by an employee or other representative of such public body, Contractor shall assume full responsibility for arranging and obtaining such inspections, tests, or approvals, pay all costs in connection therewith, and furnish Engineer the required certificates of inspection or approval.

D. Contractor shall be responsible for arranging, obtaining, and paying for all inspections and tests required:

1. by the Contract Documents, unless the Contract Documents expressly allocate responsibility for a specific inspection or test to Owner;

2. to attain Owner's and Engineer's acceptance of materials or equipment to be incorporated in the Work;

3. by manufacturers of equipment furnished under the Contract Documents;

4. for testing, adjusting, and balancing of mechanical, electrical, and other equipment to be incorporated into the Work; and

5. for acceptance of materials, mix designs, or equipment submitted for approval prior to Contractor's purchase thereof for incorporation in the Work.

Such inspections and tests will be performed by independent inspectors, testing laboratories, or other qualified individuals or entities acceptable to Owner and Engineer.

E. If the Contract Documents require the Work (or part thereof) to be approved by Owner, Engineer, or another designated individual or entity, then Contractor shall assume full responsibility for arranging and obtaining such approvals.

F. If any Work (or the work of others) that is to be inspected, tested, or approved is covered by Contractor without written concurrence of Engineer, Contractor shall, if requested by Engineer, uncover such Work for observation. Such uncovering will be at Contractor's expense unless Contractor had given Engineer timely notice of Contractor's intention to cover the same and Engineer had not acted with reasonable promptness in response to such notice.

14.03 *Defective Work*

A. *Contractor's Obligation*: It is Contractor's obligation to assure that the Work is not defective.

B. *Engineer's Authority*: Engineer has the authority to determine whether Work is defective, and to reject defective Work.

C. *Notice of Defects*: Prompt written notice of all defective Work of which Owner or Engineer has actual knowledge will be given to Contractor.

D. *Correction, or Removal and Replacement*: Promptly after receipt of written notice of defective Work, Contractor shall correct all such defective Work, whether or not fabricated, installed, or completed, or, if Engineer has rejected the defective Work, remove it from the Project and replace it with Work that is not defective.

E. *Preservation of Warranties*: When correcting defective Work, Contractor shall take no action that would void or otherwise impair Owner's special warranty and guarantee, if any, on said Work.

F. *Costs and Damages*: In addition to its correction, removal, and replacement obligations with respect to defective Work, Contractor shall pay all claims, costs, losses, and damages arising out of or relating to defective Work, including but not limited to the cost of the inspection, testing, correction, removal, replacement, or reconstruction of such defective Work, fines levied against Owner by governmental authorities because the Work is defective, and the costs of repair or replacement of work of others resulting from defective Work. Prior to final payment, if Owner and Contractor are unable to agree as to the measure of such claims, costs, losses, and damages resulting from defective Work, then Owner may impose a reasonable set-off against payments due under Article 15.

14.04 *Acceptance of Defective Work*

A. If, instead of requiring correction or removal and replacement of defective Work, Owner prefers to accept it, Owner may do so (subject, if such acceptance occurs prior to final payment, to Engineer's confirmation that such acceptance is in general accord with the design intent and applicable engineering principles, and will not endanger public safety). Contractor shall pay all claims, costs, losses, and damages attributable to Owner's evaluation of and determination to accept such defective Work (such costs to be approved

by Engineer as to reasonableness), and for the diminished value of the Work to the extent not otherwise paid by Contractor. If any such acceptance occurs prior to final payment, the necessary revisions in the Contract Documents with respect to the Work will be incorporated in a Change Order. If the parties are unable to agree as to the decrease in the Contract Price, reflecting the diminished value of Work so accepted, then Owner may impose a reasonable set-off against payments due under Article 15. If the acceptance of defective Work occurs after final payment, Contractor shall pay an appropriate amount to Owner.

14.05 *Uncovering Work*

A. Engineer has the authority to require additional inspection or testing of the Work, whether or not the Work is fabricated, installed, or completed.

B. If any Work is covered contrary to the written request of Engineer, then Contractor shall, if requested by Engineer, uncover such Work for Engineer's observation, and then replace the covering, all at Contractor's expense.

C. If Engineer considers it necessary or advisable that covered Work be observed by Engineer or inspected or tested by others, then Contractor, at Engineer's request, shall uncover, expose, or otherwise make available for observation, inspection, or testing as Engineer may require, that portion of the Work in question, and provide all necessary labor, material, and equipment.

1. If it is found that the uncovered Work is defective, Contractor shall be responsible for all claims, costs, losses, and damages arising out of or relating to such uncovering, exposure, observation, inspection, and testing, and of satisfactory replacement or reconstruction (including but not limited to all costs of repair or replacement of work of others); and pending Contractor's full discharge of this responsibility the Owner shall be entitled to impose a reasonable set-off against payments due under Article 15.

2. If the uncovered Work is not found to be defective, Contractor shall be allowed an increase in the Contract Price or an extension of the Contract Times, directly attributable to such uncovering, exposure, observation, inspection, testing, replacement, and reconstruction. If the parties are unable to agree as to the amount or extent thereof, then Contractor may submit a Change Proposal within 30 days of the determination that the Work is not defective.

14.06 *Owner May Stop the Work*

A. If the Work is defective, or Contractor fails to supply sufficient skilled workers or suitable materials or equipment, or fails to perform the Work in such a way that the completed Work will conform to the Contract Documents, then Owner may order Contractor to stop the Work, or any portion thereof, until the cause for such order has been eliminated; however, this right of Owner to stop the Work will not give rise to any duty on the part of Owner to exercise this right for the benefit of Contractor, any Subcontractor, any Supplier, any other individual or entity, or any surety for, or employee or agent of any of them.

14.07 *Owner May Correct Defective Work*

A. If Contractor fails within a reasonable time after written notice from Engineer to correct defective Work, or to remove and replace defective Work as required by Engineer, then

Owner may, after 7 days' written notice to Contractor, correct or remedy any such deficiency.

B. In exercising the rights and remedies under this Paragraph 14.07, Owner shall proceed expeditiously. In connection with such corrective or remedial action, Owner may exclude Contractor from all or part of the Site, take possession of all or part of the Work and suspend Contractor's services related thereto, and incorporate in the Work all materials and equipment stored at the Site or for which Owner has paid Contractor but which are stored elsewhere. Contractor shall allow Owner, Owner's representatives, agents and employees, Owner's other contractors, and Engineer and Engineer's consultants access to the Site to enable Owner to exercise the rights and remedies under this paragraph.

C. All claims, costs, losses, and damages incurred or sustained by Owner in exercising the rights and remedies under this Paragraph 14.07 will be charged against Contractor as set-offs against payments due under Article 15. Such claims, costs, losses and damages will include but not be limited to all costs of repair, or replacement of work of others destroyed or damaged by correction, removal, or replacement of Contractor's defective Work.

D. Contractor shall not be allowed an extension of the Contract Times because of any delay in the performance of the Work attributable to the exercise by Owner of Owner's rights and remedies under this Paragraph 14.07.

ARTICLE 15—PAYMENTS TO CONTRACTOR; SET-OFFS; COMPLETION; CORRECTION PERIOD

15.01 *Progress Payments*

A. *Basis for Progress Payments*: The Schedule of Values established as provided in Article 2 will serve as the basis for progress payments and will be incorporated into a form of Application for Payment acceptable to Engineer. Progress payments for Unit Price Work will be based on the number of units completed during the pay period, as determined under the provisions of Paragraph 13.03. Progress payments for cost-based Work will be based on Cost of the Work completed by Contractor during the pay period.

B. *Applications for Payments*

1. At least 20 days before the date established in the Agreement for each progress payment (but not more often than once a month), Contractor shall submit to Engineer for review an Application for Payment filled out and signed by Contractor covering the Work completed as of the date of the Application and accompanied by such supporting documentation as is required by the Contract Documents.

2. If payment is requested on the basis of materials and equipment not incorporated in the Work but delivered and suitably stored at the Site or at another location agreed to in writing, the Application for Payment must also be accompanied by: (a) a bill of sale, invoice, copies of subcontract or purchase order payments, or other documentation establishing full payment by Contractor for the materials and equipment; (b) at Owner's request, documentation warranting that Owner has received the materials and equipment free and clear of all Liens; and (c) evidence that the materials and equipment are covered by appropriate property insurance, a warehouse bond, or other arrangements to protect Owner's interest therein, all of which must be satisfactory to Owner.

3. Beginning with the second Application for Payment, each Application must include an affidavit of Contractor stating that all previous progress payments received by Contractor have been applied to discharge Contractor's legitimate obligations associated with prior Applications for Payment.

4. The amount of retainage with respect to progress payments will be as stipulated in the Agreement.

C. *Review of Applications*

1. Engineer will, within 10 days after receipt of each Application for Payment, including each resubmittal, either indicate in writing a recommendation of payment and present the Application to Owner, or return the Application to Contractor indicating in writing Engineer's reasons for refusing to recommend payment. In the latter case, Contractor may make the necessary corrections and resubmit the Application.

2. Engineer's recommendation of any payment requested in an Application for Payment will constitute a representation by Engineer to Owner, based on Engineer's observations of the executed Work as an experienced and qualified design professional, and on Engineer's review of the Application for Payment and the accompanying data and schedules, that to the best of Engineer's knowledge, information and belief:

   a. the Work has progressed to the point indicated;

   b. the quality of the Work is generally in accordance with the Contract Documents (subject to an evaluation of the Work as a functioning whole prior to or upon Substantial Completion, the results of any subsequent tests called for in the Contract Documents, a final determination of quantities and classifications for Unit Price Work under Paragraph 13.03, and any other qualifications stated in the recommendation); and

   c. the conditions precedent to Contractor's being entitled to such payment appear to have been fulfilled in so far as it is Engineer's responsibility to observe the Work.

3. By recommending any such payment Engineer will not thereby be deemed to have represented that:

   a. inspections made to check the quality or the quantity of the Work as it has been performed have been exhaustive, extended to every aspect of the Work in progress, or involved detailed inspections of the Work beyond the responsibilities specifically assigned to Engineer in the Contract; or

   b. there may not be other matters or issues between the parties that might entitle Contractor to be paid additionally by Owner or entitle Owner to withhold payment to Contractor.

4. Neither Engineer's review of Contractor's Work for the purposes of recommending payments nor Engineer's recommendation of any payment, including final payment, will impose responsibility on Engineer:

   a. to supervise, direct, or control the Work;

   b. for the means, methods, techniques, sequences, or procedures of construction, or the safety precautions and programs incident thereto;

c. for Contractor's failure to comply with Laws and Regulations applicable to Contractor's performance of the Work;

d. to make any examination to ascertain how or for what purposes Contractor has used the money paid by Owner; or

e. to determine that title to any of the Work, materials, or equipment has passed to Owner free and clear of any Liens.

5. Engineer may refuse to recommend the whole or any part of any payment if, in Engineer's opinion, it would be incorrect to make the representations to Owner stated in Paragraph 15.01.C.2.

6. Engineer will recommend reductions in payment (set-offs) necessary in Engineer's opinion to protect Owner from loss because:

a. the Work is defective, requiring correction or replacement;

b. the Contract Price has been reduced by Change Orders;

c. Owner has been required to correct defective Work in accordance with Paragraph 14.07, or has accepted defective Work pursuant to Paragraph 14.04;

d. Owner has been required to remove or remediate a Hazardous Environmental Condition for which Contractor is responsible; or

e. Engineer has actual knowledge of the occurrence of any of the events that would constitute a default by Contractor and therefore justify termination for cause under the Contract Documents.

D. *Payment Becomes Due*

1. Ten days after presentation of the Application for Payment to Owner with Engineer's recommendation, the amount recommended (subject to any Owner set-offs) will become due, and when due will be paid by Owner to Contractor.

E. *Reductions in Payment by Owner*

1. In addition to any reductions in payment (set-offs) recommended by Engineer, Owner is entitled to impose a set-off against payment based on any of the following:

a. Claims have been made against Owner based on Contractor's conduct in the performance or furnishing of the Work, or Owner has incurred costs, losses, or damages resulting from Contractor's conduct in the performance or furnishing of the Work, including but not limited to claims, costs, losses, or damages from workplace injuries, adjacent property damage, non-compliance with Laws and Regulations, and patent infringement;

b. Contractor has failed to take reasonable and customary measures to avoid damage, delay, disruption, and interference with other work at or adjacent to the Site;

c. Contractor has failed to provide and maintain required bonds or insurance;

d. Owner has been required to remove or remediate a Hazardous Environmental Condition for which Contractor is responsible;

e. Owner has incurred extra charges or engineering costs related to submittal reviews, evaluations of proposed substitutes, tests and inspections, or return visits to manufacturing or assembly facilities;

f. The Work is defective, requiring correction or replacement;

g. Owner has been required to correct defective Work in accordance with Paragraph 14.07, or has accepted defective Work pursuant to Paragraph 14.04;

h. The Contract Price has been reduced by Change Orders;

i. An event has occurred that would constitute a default by Contractor and therefore justify a termination for cause;

j. Liquidated or other damages have accrued as a result of Contractor's failure to achieve Milestones, Substantial Completion, or final completion of the Work;

k. Liens have been filed in connection with the Work, except where Contractor has delivered a specific bond satisfactory to Owner to secure the satisfaction and discharge of such Liens; or

l. Other items entitle Owner to a set-off against the amount recommended.

2. If Owner imposes any set-off against payment, whether based on its own knowledge or on the written recommendations of Engineer, Owner will give Contractor immediate written notice (with a copy to Engineer) stating the reasons for such action and the specific amount of the reduction, and promptly pay Contractor any amount remaining after deduction of the amount so withheld. Owner shall promptly pay Contractor the amount so withheld, or any adjustment thereto agreed to by Owner and Contractor, if Contractor remedies the reasons for such action. The reduction imposed will be binding on Contractor unless it duly submits a Change Proposal contesting the reduction.

3. Upon a subsequent determination that Owner's refusal of payment was not justified, the amount wrongfully withheld will be treated as an amount due as determined by Paragraph 15.01.D.1 and subject to interest as provided in the Agreement.

15.02 *Contractor's Warranty of Title*

A. Contractor warrants and guarantees that title to all Work, materials, and equipment furnished under the Contract will pass to Owner free and clear of (1) all Liens and other title defects, and (2) all patent, licensing, copyright, or royalty obligations, no later than 7 days after the time of payment by Owner.

15.03 *Substantial Completion*

A. When Contractor considers the entire Work ready for its intended use Contractor shall notify Owner and Engineer in writing that the entire Work is substantially complete and request that Engineer issue a certificate of Substantial Completion. Contractor shall at the same time submit to Owner and Engineer an initial draft of punch list items to be completed or corrected before final payment.

B. Promptly after Contractor's notification, Owner, Contractor, and Engineer shall make an inspection of the Work to determine the status of completion. If Engineer does not consider the Work substantially complete, Engineer will notify Contractor in writing giving the reasons therefor.

C. If Engineer considers the Work substantially complete, Engineer will deliver to Owner a preliminary certificate of Substantial Completion which will fix the date of Substantial Completion. Engineer shall attach to the certificate a punch list of items to be completed or corrected before final payment. Owner shall have 7 days after receipt of the preliminary certificate during which to make written objection to Engineer as to any provisions of the certificate or attached punch list. If, after considering the objections to the provisions of the preliminary certificate, Engineer concludes that the Work is not substantially complete, Engineer will, within 14 days after submission of the preliminary certificate to Owner, notify Contractor in writing that the Work is not substantially complete, stating the reasons therefor. If Owner does not object to the provisions of the certificate, or if despite consideration of Owner's objections Engineer concludes that the Work is substantially complete, then Engineer will, within said 14 days, execute and deliver to Owner and Contractor a final certificate of Substantial Completion (with a revised punch list of items to be completed or corrected) reflecting such changes from the preliminary certificate as Engineer believes justified after consideration of any objections from Owner.

D. At the time of receipt of the preliminary certificate of Substantial Completion, Owner and Contractor will confer regarding Owner's use or occupancy of the Work following Substantial Completion, review the builder's risk insurance policy with respect to the end of the builder's risk coverage, and confirm the transition to coverage of the Work under a permanent property insurance policy held by Owner. Unless Owner and Contractor agree otherwise in writing, Owner shall bear responsibility for security, operation, protection of the Work, property insurance, maintenance, heat, and utilities upon Owner's use or occupancy of the Work.

E. After Substantial Completion the Contractor shall promptly begin work on the punch list of items to be completed or corrected prior to final payment. In appropriate cases Contractor may submit monthly Applications for Payment for completed punch list items, following the progress payment procedures set forth above.

F. Owner shall have the right to exclude Contractor from the Site after the date of Substantial Completion subject to allowing Contractor reasonable access to remove its property and complete or correct items on the punch list.

15.04 *Partial Use or Occupancy*

A. Prior to Substantial Completion of all the Work, Owner may use or occupy any substantially completed part of the Work which has specifically been identified in the Contract Documents, or which Owner, Engineer, and Contractor agree constitutes a separately functioning and usable part of the Work that can be used by Owner for its intended purpose without significant interference with Contractor's performance of the remainder of the Work, subject to the following conditions:

1. At any time, Owner may request in writing that Contractor permit Owner to use or occupy any such part of the Work that Owner believes to be substantially complete. If and when Contractor agrees that such part of the Work is substantially complete, Contractor, Owner, and Engineer will follow the procedures of Paragraph 15.03.A through 15.03.E for that part of the Work.

2. At any time, Contractor may notify Owner and Engineer in writing that Contractor considers any such part of the Work substantially complete and request Engineer to issue a certificate of Substantial Completion for that part of the Work.

3. Within a reasonable time after either such request, Owner, Contractor, and Engineer shall make an inspection of that part of the Work to determine its status of completion. If Engineer does not consider that part of the Work to be substantially complete, Engineer will notify Owner and Contractor in writing giving the reasons therefor. If Engineer considers that part of the Work to be substantially complete, the provisions of Paragraph 15.03 will apply with respect to certification of Substantial Completion of that part of the Work and the division of responsibility in respect thereof and access thereto.

4. No use or occupancy or separate operation of part of the Work may occur prior to compliance with the requirements of Paragraph 6.04 regarding builder's risk or other property insurance.

15.05 *Final Inspection*

A. Upon written notice from Contractor that the entire Work or an agreed portion thereof is complete, Engineer will promptly make a final inspection with Owner and Contractor and will notify Contractor in writing of all particulars in which this inspection reveals that the Work, or agreed portion thereof, is incomplete or defective. Contractor shall immediately take such measures as are necessary to complete such Work or remedy such deficiencies.

15.06 *Final Payment*

A. *Application for Payment*

1. After Contractor has, in the opinion of Engineer, satisfactorily completed all corrections identified during the final inspection and has delivered, in accordance with the Contract Documents, all maintenance and operating instructions, schedules, guarantees, bonds, certificates or other evidence of insurance, certificates of inspection, annotated record documents (as provided in Paragraph 7.12), and other documents, Contractor may make application for final payment.

2. The final Application for Payment must be accompanied (except as previously delivered) by:

   a. all documentation called for in the Contract Documents;

   b. consent of the surety, if any, to final payment;

   c. satisfactory evidence that all title issues have been resolved such that title to all Work, materials, and equipment has passed to Owner free and clear of any Liens or other title defects, or will so pass upon final payment.

   d. a list of all duly pending Change Proposals and Claims; and

   e. complete and legally effective releases or waivers (satisfactory to Owner) of all Lien rights arising out of the Work, and of Liens filed in connection with the Work.

3. In lieu of the releases or waivers of Liens specified in Paragraph 15.06.A.2 and as approved by Owner, Contractor may furnish receipts or releases in full and an affidavit of Contractor that: (a) the releases and receipts include all labor, services, material, and equipment for which a Lien could be filed; and (b) all payrolls, material and equipment

bills, and other indebtedness connected with the Work for which Owner might in any way be responsible, or which might in any way result in liens or other burdens on Owner's property, have been paid or otherwise satisfied. If any Subcontractor or Supplier fails to furnish such a release or receipt in full, Contractor may furnish a bond or other collateral satisfactory to Owner to indemnify Owner against any Lien, or Owner at its option may issue joint checks payable to Contractor and specified Subcontractors and Suppliers.

B. *Engineer's Review of Final Application and Recommendation of Payment*: If, on the basis of Engineer's observation of the Work during construction and final inspection, and Engineer's review of the final Application for Payment and accompanying documentation as required by the Contract Documents, Engineer is satisfied that the Work has been completed and Contractor's other obligations under the Contract have been fulfilled, Engineer will, within 10 days after receipt of the final Application for Payment, indicate in writing Engineer's recommendation of final payment and present the final Application for Payment to Owner for payment. Such recommendation will account for any set-offs against payment that are necessary in Engineer's opinion to protect Owner from loss for the reasons stated above with respect to progress payments. Otherwise, Engineer will return the Application for Payment to Contractor, indicating in writing the reasons for refusing to recommend final payment, in which case Contractor shall make the necessary corrections and resubmit the Application for Payment.

C. *Notice of Acceptability*: In support of its recommendation of payment of the final Application for Payment, Engineer will also give written notice to Owner and Contractor that the Work is acceptable, subject to stated limitations in the notice and to the provisions of Paragraph 15.07.

D. *Completion of Work*: The Work is complete (subject to surviving obligations) when it is ready for final payment as established by the Engineer's written recommendation of final payment and issuance of notice of the acceptability of the Work.

E. *Final Payment Becomes Due*: Upon receipt from Engineer of the final Application for Payment and accompanying documentation, Owner shall set off against the amount recommended by Engineer for final payment any further sum to which Owner is entitled, including but not limited to set-offs for liquidated damages and set-offs allowed under the provisions of this Contract with respect to progress payments. Owner shall pay the resulting balance due to Contractor within 30 days of Owner's receipt of the final Application for Payment from Engineer.

15.07 *Waiver of Claims*

A. By making final payment, Owner waives its claim or right to liquidated damages or other damages for late completion by Contractor, except as set forth in an outstanding Claim, appeal under the provisions of Article 17, set-off, or express reservation of rights by Owner. Owner reserves all other claims or rights after final payment.

B. The acceptance of final payment by Contractor will constitute a waiver by Contractor of all claims and rights against Owner other than those pending matters that have been duly submitted as a Claim, or appealed under the provisions of Article 17.

15.08 *Correction Period*

A. If within one year after the date of Substantial Completion (or such longer period of time as may be prescribed by the Supplementary Conditions or the terms of any applicable special guarantee required by the Contract Documents), Owner gives Contractor written notice that any Work has been found to be defective, or that Contractor's repair of any damages to the Site or adjacent areas has been found to be defective, then after receipt of such notice of defect Contractor shall promptly, without cost to Owner and in accordance with Owner's written instructions:

   1. correct the defective repairs to the Site or such adjacent areas;

   2. correct such defective Work;

   3. remove the defective Work from the Project and replace it with Work that is not defective, if the defective Work has been rejected by Owner, and

   4. satisfactorily correct or repair or remove and replace any damage to other Work, to the work of others, or to other land or areas resulting from the corrective measures.

B. Owner shall give any such notice of defect within 60 days of the discovery that such Work or repairs is defective. If such notice is given within such 60 days but after the end of the correction period, the notice will be deemed a notice of defective Work under Paragraph 7.17.B.

C. If, after receipt of a notice of defect within 60 days and within the correction period, Contractor does not promptly comply with the terms of Owner's written instructions, or in an emergency where delay would cause serious risk of loss or damage, Owner may have the defective Work corrected or repaired or may have the rejected Work removed and replaced. Contractor shall pay all costs, losses, and damages (including but not limited to all fees and charges of engineers, architects, attorneys, and other professionals and all court or arbitration or other dispute resolution costs) arising out of or relating to such correction or repair or such removal and replacement (including but not limited to all costs of repair or replacement of work of others). Contractor's failure to pay such costs, losses, and damages within 10 days of invoice from Owner will be deemed the start of an event giving rise to a Claim under Paragraph 12.01.B, such that any related Claim must be brought within 30 days of the failure to pay.

D. In special circumstances where a particular item of equipment is placed in continuous service before Substantial Completion of all the Work, the correction period for that item may start to run from an earlier date if so provided in the Specifications.

E. Where defective Work (and damage to other Work resulting therefrom) has been corrected or removed and replaced under this paragraph, the correction period hereunder with respect to such Work will be extended for an additional period of one year after such correction or removal and replacement has been satisfactorily completed.

F. Contractor's obligations under this paragraph are in addition to all other obligations and warranties. The provisions of this paragraph are not to be construed as a substitute for, or a waiver of, the provisions of any applicable statute of limitation or repose.

ARTICLE 16—SUSPENSION OF WORK AND TERMINATION

16.01 *Owner May Suspend Work*

A. At any time and without cause, Owner may suspend the Work or any portion thereof for a period of not more than 90 consecutive days by written notice to Contractor and Engineer. Such notice will fix the date on which Work will be resumed. Contractor shall resume the Work on the date so fixed. Contractor shall be entitled to an adjustment in the Contract Price or an extension of the Contract Times directly attributable to any such suspension. Any Change Proposal seeking such adjustments must be submitted no later than 30 days after the date fixed for resumption of Work.

16.02 *Owner May Terminate for Cause*

A. The occurrence of any one or more of the following events will constitute a default by Contractor and justify termination for cause:

1. Contractor's persistent failure to perform the Work in accordance with the Contract Documents (including, but not limited to, failure to supply sufficient skilled workers or suitable materials or equipment, or failure to adhere to the Progress Schedule);

2. Failure of Contractor to perform or otherwise to comply with a material term of the Contract Documents;

3. Contractor's disregard of Laws or Regulations of any public body having jurisdiction; or

4. Contractor's repeated disregard of the authority of Owner or Engineer.

B. If one or more of the events identified in Paragraph 16.02.A occurs, then after giving Contractor (and any surety) 10 days' written notice that Owner is considering a declaration that Contractor is in default and termination of the Contract, Owner may proceed to:

1. declare Contractor to be in default, and give Contractor (and any surety) written notice that the Contract is terminated; and

2. enforce the rights available to Owner under any applicable performance bond.

C. Subject to the terms and operation of any applicable performance bond, if Owner has terminated the Contract for cause, Owner may exclude Contractor from the Site, take possession of the Work, incorporate in the Work all materials and equipment stored at the Site or for which Owner has paid Contractor but which are stored elsewhere, and complete the Work as Owner may deem expedient.

D. Owner may not proceed with termination of the Contract under Paragraph 16.02.B if Contractor within 7 days of receipt of notice of intent to terminate begins to correct its failure to perform and proceeds diligently to cure such failure.

E. If Owner proceeds as provided in Paragraph 16.02.B, Contractor shall not be entitled to receive any further payment until the Work is completed. If the unpaid balance of the Contract Price exceeds the cost to complete the Work, including all related claims, costs, losses, and damages (including but not limited to all fees and charges of engineers, architects, attorneys, and other professionals) sustained by Owner, such excess will be paid to Contractor. If the cost to complete the Work including such related claims, costs, losses, and damages exceeds such unpaid balance, Contractor shall pay the difference to Owner. Such claims, costs, losses, and damages incurred by Owner will be reviewed by Engineer as

to their reasonableness and, when so approved by Engineer, incorporated in a Change Order. When exercising any rights or remedies under this paragraph, Owner shall not be required to obtain the lowest price for the Work performed.

F. Where Contractor's services have been so terminated by Owner, the termination will not affect any rights or remedies of Owner against Contractor then existing or which may thereafter accrue, or any rights or remedies of Owner against Contractor or any surety under any payment bond or performance bond. Any retention or payment of money due Contractor by Owner will not release Contractor from liability.

G. If and to the extent that Contractor has provided a performance bond under the provisions of Paragraph 6.01.A, the provisions of that bond will govern over any inconsistent provisions of Paragraphs 16.02.B and 16.02.D.

16.03 *Owner May Terminate for Convenience*

A. Upon 7 days' written notice to Contractor and Engineer, Owner may, without cause and without prejudice to any other right or remedy of Owner, terminate the Contract. In such case, Contractor shall be paid for (without duplication of any items):

1. completed and acceptable Work executed in accordance with the Contract Documents prior to the effective date of termination, including fair and reasonable sums for overhead and profit on such Work;

2. expenses sustained prior to the effective date of termination in performing services and furnishing labor, materials, or equipment as required by the Contract Documents in connection with uncompleted Work, plus fair and reasonable sums for overhead and profit on such expenses; and

3. other reasonable expenses directly attributable to termination, including costs incurred to prepare a termination for convenience cost proposal.

B. Contractor shall not be paid for any loss of anticipated profits or revenue, post-termination overhead costs, or other economic loss arising out of or resulting from such termination.

16.04 *Contractor May Stop Work or Terminate*

A. If, through no act or fault of Contractor, (1) the Work is suspended for more than 90 consecutive days by Owner or under an order of court or other public authority, or (2) Engineer fails to act on any Application for Payment within 30 days after it is submitted, or (3) Owner fails for 30 days to pay Contractor any sum finally determined to be due, then Contractor may, upon 7 days' written notice to Owner and Engineer, and provided Owner or Engineer do not remedy such suspension or failure within that time, terminate the contract and recover from Owner payment on the same terms as provided in Paragraph 16.03.

B. In lieu of terminating the Contract and without prejudice to any other right or remedy, if Engineer has failed to act on an Application for Payment within 30 days after it is submitted, or Owner has failed for 30 days to pay Contractor any sum finally determined to be due, Contractor may, 7 days after written notice to Owner and Engineer, stop the Work until payment is made of all such amounts due Contractor, including interest thereon. The provisions of this paragraph are not intended to preclude Contractor from submitting a Change Proposal for an adjustment in Contract Price or Contract Times or otherwise for expenses or damage directly attributable to Contractor's stopping the Work as permitted by this paragraph.

ARTICLE 17—FINAL RESOLUTION OF DISPUTES

17.01 *Methods and Procedures*

A. *Disputes Subject to Final Resolution*: The following disputed matters are subject to final resolution under the provisions of this article:

1. A timely appeal of an approval in part and denial in part of a Claim, or of a denial in full, pursuant to Article 12; and

2. Disputes between Owner and Contractor concerning the Work, or obligations under the Contract Documents, that arise after final payment has been made.

B. *Final Resolution of Disputes*: For any dispute subject to resolution under this article, Owner or Contractor may:

1. elect in writing to invoke the dispute resolution process provided for in the Supplementary Conditions;

2. agree with the other party to submit the dispute to another dispute resolution process; or

3. if no dispute resolution process is provided for in the Supplementary Conditions or mutually agreed to, give written notice to the other party of the intent to submit the dispute to a court of competent jurisdiction.

ARTICLE 18—MISCELLANEOUS

18.01 *Giving Notice*

A. Whenever any provision of the Contract requires the giving of written notice to Owner, Engineer, or Contractor, it will be deemed to have been validly given only if delivered:

1. in person, by a commercial courier service or otherwise, to the recipient's place of business;

2. by registered or certified mail, postage prepaid, to the recipient's place of business; or

3. by e-mail to the recipient, with the words "Formal Notice" or similar in the e-mail's subject line.

18.02 *Computation of Times*

A. When any period of time is referred to in the Contract by days, it will be computed to exclude the first and include the last day of such period. If the last day of any such period falls on a Saturday or Sunday or on a day made a legal holiday by the law of the applicable jurisdiction, such day will be omitted from the computation.

18.03 *Cumulative Remedies*

A. The duties and obligations imposed by these General Conditions and the rights and remedies available hereunder to the parties hereto are in addition to, and are not to be construed in any way as a limitation of, any rights and remedies available to any or all of them which are otherwise imposed or available by Laws or Regulations, by special warranty or guarantee, or by other provisions of the Contract. The provisions of this paragraph will be

as effective as if repeated specifically in the Contract Documents in connection with each particular duty, obligation, right, and remedy to which they apply.

18.04 *Limitation of Damages*

A. With respect to any and all Change Proposals, Claims, disputes subject to final resolution, and other matters at issue, neither Owner nor Engineer, nor any of their officers, directors, members, partners, employees, agents, consultants, or subcontractors, shall be liable to Contractor for any claims, costs, losses, or damages sustained by Contractor on or in connection with any other project or anticipated project.

18.05 *No Waiver*

A. A party's non-enforcement of any provision will not constitute a waiver of that provision, nor will it affect the enforceability of that provision or of the remainder of this Contract.

18.06 *Survival of Obligations*

A. All representations, indemnifications, warranties, and guarantees made in, required by, or given in accordance with the Contract, as well as all continuing obligations indicated in the Contract, will survive final payment, completion, and acceptance of the Work or termination of the Contract or of the services of Contractor.

18.07 *Controlling Law*

A. This Contract is to be governed by the law of the state in which the Project is located.

18.08 *Assignment of Contract*

A. Unless expressly agreed to elsewhere in the Contract, no assignment by a party to this Contract of any rights under or interests in the Contract will be binding on the other party without the written consent of the party sought to be bound; and, specifically but without limitation, money that may become due and money that is due may not be assigned without such consent (except to the extent that the effect of this restriction may be limited by law), and unless specifically stated to the contrary in any written consent to an assignment, no assignment will release or discharge the assignor from any duty or responsibility under the Contract.

18.09 *Successors and Assigns*

A. Owner and Contractor each binds itself, its successors, assigns, and legal representatives to the other party hereto, its successors, assigns, and legal representatives in respect to all covenants, agreements, and obligations contained in the Contract Documents.

18.10 *Headings*

A. Article and paragraph headings are inserted for convenience only and do not constitute parts of these General Conditions.

This document has important legal consequences; consultation with an attorney is encouraged with respect to its use or modification. This document should be adapted to the particular circumstances of the contemplated Project and the controlling Laws and Regulations.

SUPPLEMENTARY CONDITIONS OF THE CONSTRUCTION CONTRACT—CONSTRUCTION MANAGER AS ADVISOR SERIES

Prepared By

EJCDC®
ENGINEERS JOINT CONTRACT DOCUMENTS COMMITTEE

ACEC
AMERICAN COUNCIL OF ENGINEERING COMPANIES

ASCE
AMERICAN SOCIETY OF CIVIL ENGINEERS

NSPE®
NATIONAL SOCIETY OF PROFESSIONAL ENGINEERS

GUIDELINES FOR USE OF EJCDC® CMA-800, SUPPLEMENTARY CONDITIONS OF THE CONSTRUCTION CONTRACT—CONSTRUCTION MANAGER AS ADVISOR SERIES

1.0 PURPOSE AND INTENDED USE OF THE DOCUMENT

1.1 Supplementary Conditions of the Construction Contract

EJCDC® CMA-800, Supplementary Conditions of the Construction Contract—Construction Manager as Advisor Series (2021), is used to supplement the provisions of EJCDC® CMA-700, Standard General Conditions of the Construction Contract—Construction Manager as Advisor Series (2021). Such supplementation may consist of additions, deletions, or revisions of the General Conditions.

CMA-800 is modeled closely on EJCDC® C-800, Supplementary Conditions of the Construction Contract (2018). The two documents have the same organizational structure, and contain similar suggested Supplementary Conditions. The primary differences between the two Supplementary Conditions documents are the administrative role and responsibilities of the Construction Manager, and corresponding refinement of the Engineer's construction-phase role, in CMA-800.

1.2 2021 EJCDC Construction Manager as Advisor Series

The Engineers Joint Contract Documents Committee® (EJCDC®) prepares and publishes standard contract forms for construction contracts, as well as bidding-related documents. EJCDC's Construction Series (C-Series) has been in publication for many decades, in various editions, and is comprised of construction contract and bidding-related documents for projects in which the Owner's primary representative during construction is the Engineer. The new (as of 2021) EJCDC Construction Manager as Advisor Series (CMA Series) is intended for projects in which the Owner's primary representative during construction is the Construction Manager as Advisor. The documents in the CMA Series are based on their counterparts in the C-Series.

The principal construction contract and bidding-related documents in the new CMA Series are listed in Table 1. The CMA Series also includes documents that may be useful in preparing the construction contract and bidding-related documents; some of the principal ones are listed in Table 2. In addition, the CMA Series includes administrative forms (Notice of Award, Change Order, Certificate of Substantial Completion, and others) and CMA-501, Agreement between Owner and Construction Manager. For the most recent editions of these forms, guides, and other documents, please refer to EJCDC's website at www.ejcdc.org.

Table 1—Principal EJCDC Standard Forms for Construction Contracts, where Owner is represented by a Construction Manager as Advisor

EJCDC Doc. No.	Document Title	Edition	EJCDC Doc. No.
CMA-200	Instructions to Bidders for Construction Contract—Construction Manager as Advisor Series	2021	Instructions/I
CMA-410	Bid Form for Construction Contract—Construction Manager as Advisor Series	2021	Bid Form/BF

EJCDC Doc. No.	Document Title	Edition	EJCDC Doc. No.
CMA-520	Agreement between Owner and Contractor for Construction Contract (Stipulated Sum)—Construction Manager as Advisor Series	2021	Stipulated Price Agreement/A
CMA-525	Agreement between Owner and Contractor for Construction Contract (Cost-Plus-Fee)—Construction Manager as Advisor Series	2021	Cost-Plus Agreement/A
CMA-700	Standard General Conditions of the Construction Contract—Construction Manager as Advisor Series	2021	General Conditions/GC
CMA-800	Supplementary Conditions of the Construction Contract—Construction Manager as Advisor Series	2021	Supplementary Conditions/SC

Table 2—Principal EJCDC Documents Relating to Preparation of Construction Documents

EJCDC Doc. No.	Document Title	Edition	EJCDC Doc. No.
C-001	Commentary on the 2018 EJCDC Construction Documents	2018	Commentary
CMA-001	Commentary on the 2021 EJCDC Construction Manager as Advisor Documents	2021	CMA Commentary
CMA-050	Bidding Procedures and Construction Contract Documents — Construction Manager as Advisor Series	2021	Bidding Procedures
CMA-051	Construction Manager's Letter to Owner Requesting Instructions Concerning Bonds and Insurance — Construction Manager as Advisor Series	2021	CM's Letter to Owner Concerning Bonds and Insurance
CMA-052	Owner's Instructions to Construction Manager Concerning Bonds and Insurance — Construction Manager as Advisor Series	2021	Owner's Instructions Concerning Bonds and Insurance
N-122	Uniform Location of Subject Matter	2012	Locator Guide

1.3 Mandatory Supplementary Conditions

A. Several provisions of the General Conditions expressly indicate that essential project-specific information will be set out in a corresponding Supplementary Condition. For example, Paragraph 6.03.A of the General Conditions indicates that the specific requirements for insurance to be carried by Contractor will be stated in the Supplementary Conditions. Every EJCDC-based construction contract should include, at a minimum, the following Supplementary Conditions, edited for the specific project:

1. Paragraph SC-5.03, concerning reports and drawings of conditions at the Site that contain Technical Data on whose accuracy the Contractor may rely;

2. Paragraph SC-5.06, disclosing reports and drawings regarding Hazardous Environmental Conditions at the Site, and identifying any Technical Data in those reports and drawings on whose accuracy the Contractor may rely;

3. Paragraph SC-6.03, identifying specific insurance coverage requirements; and

4. Paragraph SC-13.01, identifying the equipment rate book or similar resource to be used (for pricing change orders, and for cost-based contracts).

B. Other suggested Supplementary Conditions are mandatory under specific circumstances—for example, on projects in which the Contractor will be responsible for compliance with Owner's safety program, SC-7.13 would be mandatory.

C. In describing a Supplementary Condition as "mandatory" EJCDC is indicating that it is essential to furnish the information that is the subject of the Supplementary Condition; however, the drafter is not restricted from modifying the wording and content of the proposed Supplementary Condition as needed.

1.4 Relationship of Supplementary Conditions to Other Contract Documents

Supplementary Conditions are modifications to the General Conditions—additions, deletions, changes. This is as the term is defined by EJCDC and the Construction Specification Institute (CSI). Other organizations use their supplementary conditions to modify a broader range of contract documents, such as agreement forms and standard specifications.

This Guide and the other Construction-related documents prepared and issued by EJCDC assume use of the CSI MasterFormat™ concept, which provides an organizational format for location of all documentary information for a construction project: Bidding Requirements, contract forms (Agreement, Bonds, and certificates), General Conditions, Supplementary Conditions, and Specifications. Under the CSI MasterFormat™, the last grouping, Specifications, is divided into 49 Divisions, the first of which, Division 01, is entitled "General Requirements."

The standard fundamental provisions affecting the rights and duties of the parties appear in the General Conditions. Language to modify the fundamental relationships between the parties, supplement the framework set forth in the General Conditions, or change the language of the General Conditions, should appear in the Supplementary Conditions. Examples of this are a change in Contractor's Site responsibilities, and a supplemental clause specifying the details of insurance coverages and limits for the Project.

Price terms, monetary terms such as liquidated damages clauses, and completion dates should all be set forth in the Owner-Contractor Agreement (CMA-520–Stipulated Sum, or CMA-525–Cost-Plus-Fee), and should not be included in the Supplementary Conditions.

1.5 Arrangement of Subject Matter

This Supplementary Conditions document is arranged in the same order as the 2021 Construction Manager as Advisor edition of the General Conditions, and the proposed Supplementary Conditions Paragraphs bear comparable addresses to those of the General Conditions. A discussion of the purpose and function of these suggested Supplementary Conditions is included in EJCDC® C-001, Commentary on the 2018 EJCDC Construction Documents (2018) and EJCDC® CMA-001, Commentary on the 2021 EJCDC Construction Manager as Advisor Documents (2021).

1.6 Use of this Document

The text in this document is suggested contract language for some commonly used Supplementary Conditions. Most of the suggested Supplementary Conditions are accompanied

by Guidance Notes that discuss the purpose or usage of the Supplementary Condition. These Guidance Notes are often just the first step in determining whether to use the Supplementary Condition, and if so whether revisions are needed to suit the specific project. The drafter should bear in mind that most contractual provisions have important legal consequences. Consultation with legal counsel before finalization of any amendment or supplement is recommended.

There may be Guidance Notes and Notes to User within the Supplementary Conditions. These should be read and followed, then removed when the document is finalized. See Paragraph 4.0, Finalizing a Specific Project's Supplementary Conditions, below.

Many sets of supplementary conditions examined by EJCDC contain typical or "boilerplate" provisions that have accumulated like moss over the years, appear to have no practical significance for the particular project, and may produce unintended and surprising legal consequences. Such provisions are usually there because someone saw similar terms in other contract documents and it "sounded good." Selecting contract terms in that manner is not recommended. Provisions of the Supplementary Conditions should address a particular point in the General Conditions or cover a particular topic. The Supplementary Conditions should not be a repository for general language of vague meaning for which another location cannot be readily found.

This Supplementary Conditions document assumes a general familiarity with the other Construction Manager as Advisor (CMA-Series) or Construction Series (C-Series) documents prepared by EJCDC and, when drafting language, specific attention to them is encouraged. Standard documents or prescribed forms issued by governmental bodies and other owners may differ materially from the documents of EJCDC so careful correlation of any amending or supplementing language is essential. The practice of stating that any provision in one document that is inconsistent with another is superseded, or that one document always takes precedence over another in the event of a conflict in language or requirements, is sometimes necessary, but generally discouraged. The resulting legal consequences of such provisions are frequently difficult to decipher and may be very different from what was anticipated.

The EJCDC General Conditions use carefully chosen language and set forth the basic responsibilities of the parties with respect to fundamental matters and legal consequences. Their provisions should be altered only where mandated by the specific requirements of a given project and the consequences of any modification are thoroughly understood.

Caution should be exercised when making any change in the standard documents. They have been carefully prepared. Terms are used uniformly throughout and are consistent with the terms in other EJCDC documents. Their provisions have been carefully integrated and are dependent on one another. A change in one document may necessitate a change in another, and a change in one paragraph may necessitate a change in other language of the same document. No change should be made until its full effect on the rest of the General Conditions and other Contract Documents has been considered.

Lastly, remember that an engineer is neither qualified nor licensed to give advice to others on the legal consequences of contracts. All of the Contract Documents have important legal consequences. Similarly, many portions of the documents involve insurance, bonding, and other subjects that are outside the scope of an engineer's services. Even when the services are part of

the Construction Manager's scope of services, Owners are encouraged to seek the advice of an attorney (and risk managers, insurance consultants, and other specialists) before accepting any modification of the published forms, before the documents are sent out for bidding, and most assuredly before signing any agreement.

2.0 STANDARD PREFATORY LANGUAGE AND TRADITIONAL FORMAT FOR SUPPLEMENTARY CONDITIONS

Suggested format and wording conventions for Supplementary Conditions appear below.

2.1 Table of Contents

The inclusion of a table of contents will benefit the user of the Supplementary Conditions, especially if additional articles (beyond the 18 Articles of the General Conditions) are added.

2.2 Pagination

If CSI's MasterFormat™ is being used for the Contract Documents, consult MasterFormat™ for the appropriate section number and number the pages accordingly.

2.3 Format for Complete Paragraph Change

When completely superseding a paragraph of the General Conditions, the following example language may be used:

"SC-5.09 Delete Paragraph 5.09.B in its entirety and insert the following in its place:

[Text to be inserted]"

2.4 Format for Change within a Paragraph

When changing language within a paragraph of the General Conditions, the following example language may be used:

"SC-6.21 Amend the second sentence of Paragraph 6.21.A **[to read as follows] [by striking out the following words]**:

[Text to be modified]"

2.5 Format for Additional Language

When adding language to an existing paragraph of the General Conditions, the idea may be expressed as in the following example:

"SC-9.03 Add the following language at the end of the second sentence of Paragraph 9.03:

[Text to be added]"

2.6 Format for Additional Paragraph

If it is desired to add a new paragraph to the General Conditions, the thought may be expressed as in the following example:

"SC-8.06 Add the following new paragraph immediately after Paragraph 8.06.B:

C. [Paragraph text to be added]"

3.0 ALTERNATIVE FORMAT FOR SUPPLEMENTARY CONDITIONS

Electronic files are commonly used for transmittal and storage of the text of standard documents. In fact, EJCDC no longer publishes printed documents. Because it is easy to modify documents electronically, it is increasingly common for practitioners to integrate the text of desired Supplementary Conditions into the text of the General Conditions. Most word processing programs have tools that may be used to accurately show deletions, changes, and additions. Users of EJCDC's General Conditions are contractually obligated, through the terms of the purchase of the document, to clearly delineate all changes made to the standard text of the General Conditions to other parties in interest (for example, if Owner makes changes, Owner should show these changes to prospective bidders). It would be misleading to users (and a violation of the License Agreement) to imply or represent that the General Conditions are EJCDC's General Conditions if changes are not properly and clearly identified during the contract formation process. See the Guidelines for Use in CMA-700 for additional information.

4.0 FINALIZING A SPECIFIC PROJECT'S SUPPLEMENTARY CONDITIONS

4.1 Key Steps

A. Review Paragraphs 1.0, 2.0, and 3.0 above, especially Paragraph 1.5, Use of this Document.

B. Read the Guidance Notes that accompany the proposed Supplementary Conditions.

C. Retain those Supplementary Conditions that are applicable to the specific Project; revise the standard wording as needed; supply required information such as insurance policy limits.

D. Delete all proposed Supplementary Conditions that do not apply to the Project and delete Paragraphs 1.0 through 3.0 and all Guidance Notes.

E. Add any additional Supplementary Conditions specific to the Project.

F. Check cross-references back to the General Conditions.

G. Delete this Paragraph 4.0 after confirming that Paragraphs 1.0, 2.0 and 3.0, all Guidance Notes, and all other notes have been removed.

H. Remove the cover pages (title pages).

I. Update or delete the Table of Contents.

4.2 Editing the Supplementary Conditions Text

A. Type in required information as indicated by brackets (**[ ]**). Bracketed text will usually provide instructions for what is to be inserted in place of the brackets. Delete the brackets and change formatting to match surrounding text after the project specific text has been added, e.g. change "**[Project Name]**" to "Peach Street Renovation" (without brackets or bold, or quotation marks).

B. Fill in blanks, if any (more commonly information to be inserted by user will be indicated by a prompt in brackets, as described in Paragraph A above, rather than by an underline-style blank).

C. Some Notes to Users are interspersed in the text, usually within brackets. Delete all "Notes to User" after reviewing each note and taking appropriate action. Delete all associated numbering and brackets.

D. Fill in all tables.

5.0 ORGANIZATION OF INFORMATION

All parties involved in a construction project benefit significantly from a standardized approach in the location of subject matter throughout the documents. Experience confirms the danger of addressing the same subject matter in more than one location; doing so frequently leads to confusion and unanticipated legal consequences. Careful attention should be given to the guidance provided in EJCDC® N-122/AIA® A521, Uniform Location of Subject Matter (2012 Edition) when preparing documents. EJCDC® N-122/AIA® A521 is available at no charge from the EJCDC website, www.ejcdc.org, and from the websites of EJCDC's sponsoring organizations.

If CSI MasterFormat™ is used for organizing the project manual, consult CSI MasterFormat™ for the appropriate document number (e.g., under 00 11 00, Advertisements and Invitations), and accordingly number the document and its pages.

6.0 GUIDANCE NOTES AND NOTES TO USER

EJCDC Documents include Guidance Notes and Notes to User to assist in the preparation of Project-specific documents. These notes are intended for use by the user in the preparation of the document and are not intended to be included in the completed document. Guidance Notes and Notes to User are lightly shaded to distinguish them from the proposed text of the Instructions themselves. As project-specific Instructions to Bidders are prepared and made ready for issuance to bidders, all shaded text (Guidance Notes and Notes to Users) should be deleted.

A Guidance Note provides information regarding the suggested Supplementary Condition that follows, including reasons for the suggested SC, discussions of best practices, and alternate approaches for different situations.

Notes to User provide specific information for editing the text of a suggested Supplementary Condition. When alternate wording is presented, explanations on how to select the most appropriate alternate will be provided, with direction to delete the wording not used.

7.0 LICENSE AGREEMENT

This document is subject to the terms and conditions of the **License Agreement, 2021 EJCDC® Construction Manager as Advisor Series Documents**. A copy of the License Agreement was furnished at the time of purchase of this document and is available for review at www.ejcdc.org and the websites of EJCDC's sponsoring organizations.

SUPPLEMENTARY CONDITIONS OF THE CONSTRUCTION CONTRACT—CONSTRUCTION MANAGER AS ADVISOR SERIES

TABLE OF CONTENTS

Page

1.0 Purpose and Intended Use of the Document 1
1.1 General 1
1.2 Mandatory Supplementary Conditions 2
1.3 Relationship of Supplementary Conditions to Other Contract Documents 3
1.4 Arrangement of Subject Matter 3
1.5 Use of this Document 3
2.0 Standard Prefatory Language and Traditional Format for Supplementary Conditions 5
2.1 Table of Contents 5
2.2 Pagination 5
2.3 Format for Complete Paragraph Change 5
2.4 Format for Change within a Paragraph 5
2.5 Format for Additional Language 5
2.6 Format for Additional Paragraph 5
3.0 Alternative Format for Supplementary Conditions 6
4.0 Finalizing a Specific Project's Supplementary Conditions 6
4.1 Key Steps 6
4.2 Editing the Supplementary Conditions Text 6
5.0 Organization of Information 7
6.0 Guidance Notes and Notes to User 7
7.0 License Agreement 7
Article 1— Definitions and Terminology 1
Article 2— Preliminary Matters 1
Article 3— Contract Documents—Intent, Requirements, Reuse 8
Article 4— Commencement and Progress of the Work 9
Article 5— Site, Subsurface and Physical Conditions, Hazardous Environmental Conditions 12
Article 6— Bonds and Insurance 15

Article 7— Contractor's Responsibilities 29
Article 8— Other Work at the Site 32
Article 9— Owner's Responsibilities 32
Article 10— Construction Manager's and Engineer's Status During Construction 32
Article 11— Changes to the Contract 32
Article 12— Claims 32
Article 13— Cost of Work; Allowances, Unit Price Work 33
Article 14— Tests and Inspections; Correction, Removal, or Accceptance of Defective Work 34
Article 15— Payments to Contractor, Set Offs; Completions; Correction Period 34
Article 16— Suspension of Work and Termination 36
Article 17— Final Resolutions of Disputes 36
Article 18— Miscellaneous 39
Exhibit A— Software Requirements for Electronic Document Exchange 1
Exhibit B— Foreseeable Bad Weather Days 1
Exhibit C— Geotechnical Baseline Report Supplement to the Supplementary Conditions 1
1.01 Definitions 2
5.03 Subsurface and Physical Conditions 2
5.03 Subsurface and Physical Conditions 2
5.04 Differing Subsurface or Physical Conditions 5
5.04 Differing Subsurface or Physical Conditions 5

SUPPLEMENTARY CONDITIONS OF THE CONSTRUCTION CONTRACT—CONSTRUCTION MANAGER AS ADVISOR SERIES

Guidance Note—Introductory Statement—The following is a suggestion for use at the beginning of the Supplementary Conditions for a specific project:

These Supplementary Conditions amend or supplement EJCDC® CMA-700, Standard General Conditions of the Construction Contract—Construction Manager as Advisor Series (2021). The General Conditions remain in full force and effect except as amended.

The terms used in these Supplementary Conditions have the meanings stated in the General Conditions. Additional terms used in these Supplementary Conditions have the meanings stated below, which are applicable to both the singular and plural thereof.

The address system used in these Supplementary Conditions is the same as the address system used in the General Conditions, with the prefix "SC" added—for example, “Paragraph SC-4.05.”

ARTICLE 1—DEFINITIONS AND TERMINOLOGY

No suggested Supplementary Conditions in this Article.

ARTICLE 2—PRELIMINARY MATTERS

2.01 Delivery of Bonds and Evidence of Insurance

Guidance Notes—Furnishing Copies of Insurance Policies— Paragraph 2.01.B of the General Conditions requires that Contractor furnish certificates of insurance and copies of endorsements. Paragraph 6.02.D states that upon request by Owner or other additional insureds, Contractor must provide evidence of insurance such as copies of required policies, and documentation of applicable self-insured retentions and deductibles, such as a copy of the portion of the insurance policy establishing the retention or deductible amount. Parallel provisions (GC-2.01.C; GC-6.02.E) apply to Owner and the insurance that Owner is required to provide. Rather than relying on this two-step process (delivery of certificates of insurance and endorsements at the outset; subsequent requests for additional evidence of insurance), some contract drafters may elect to require from the outset that copies of the insurance policies, rather than certificates of insurance, be delivered to the other party. If exchange of copies of insurance policies is required, the following should be used:

SC-2.01 Delete Paragraphs 2.01.B. and C. in their entirety and insert the following in their place:

B. Evidence of Contractor’s Insurance—When Contractor delivers the signed counterparts of the Agreement to Owner, Contractor shall also deliver to Owner copies of the policies (including all endorsements, and identification of applicable self-insured retentions and deductibles) of insurance required to be provided by Contractor in this Contract. Contractor

may block out (redact) any confidential premium or pricing information contained in any policy or endorsement furnished under this provision.

C. Evidence of Owner's Insurance—After receipt from Contractor of the signed counterparts of the Agreement and all required bonds and insurance documentation, Owner shall promptly deliver to Contractor copies of the policies of insurance to be provided by Owner in this Contract (if any). Owner may block out (redact) any confidential premium or pricing information contained in any policy or endorsement furnished under this provision.

2.02 Copies of Documents

Guidance Notes—Furnishing Contract Documents to Contractor—GC-2.02.A indicates that Owner will furnish four printed (hard) copies of the Contract Documents, and one PDF copy.

If Owner is not furnishing PDF or other electronic files of the Contract Documents, then (1) revise GC-2.02.A to indicate that Owner is not providing the PDF files, and (2) include a Supplementary Condition that deletes Paragraph 3.01.C in its entirety (see SC-3.01 below). SC-2.02 below is used to accomplish item (1), and may also be used to change the number of printed copies of the Contract Documents to be provided, if the number is not four.

SC-2.02 Amend the first sentence of Paragraph 2.02.A. to read as follows:

Owner shall furnish to Contractor **[number]** printed copies of the Contract Documents (including one fully signed counterpart of the Agreement), and **[one copy] [none]** in electronic portable document format (PDF).

Guidance Notes—Conformed Contract Documents—On some projects it may be useful to produce conformed Contract Documents, in which the content of Addenda and negotiated changes are merged into the appropriate Specifications, Drawings, General Conditions, and other Contract Documents. This may be especially true on private construction projects where the terms and scope are negotiated and modified significantly after the initial release of proposed Contract Documents. Conformed documents may be considerably more convenient to use during the performance of the Work and the administration of the Contract.

EJCDC advises that if conformed documents are to be prepared and made available to Contractor, sufficient time and budget must be allocated to ensure the quality and full coordination of the conformed documents, and Owner, Construction Manager, and Engineer must recognize that Contractor, Subcontractors, and Suppliers will likely rely on the conformed version of the Contract Documents rather than the source components. If conformed documents are prepared without the level of commitment necessary to allow them to be accorded the full status of "Contract Documents," and are merely for reference or convenience, they should be accompanied by clear disclaimers of their content and a warning to consult the actual source Contract Documents.

A Supplementary Condition regarding conformed documents is necessary only if the Owner intends to provide the Contractor with conformed documents that will serve as binding Contract Documents. The following may be used for that purpose:

SC-2.02 Delete Paragraph 2.02.A in its entirety and insert the following new paragraph in its place:

A. Owner shall furnish to Contractor **[number]** printed copies of conformed Contract Documents incorporating and integrating all Addenda and any amendments negotiated prior to the Effective Date of the Contract (including one fully signed counterpart of the Agreement), and one copy in electronic portable document format (PDF). Additional printed copies of the conformed Contract Documents will be furnished upon request at the cost of reproduction.

2.06 Electronic Transmittals

Guidance Notes—Electronic Documents Protocol (EDP)—GC-2.06.A authorizes the electronic transmittal of Electronic Documents (commencing with the 2018 edition of the C-Series, Electronic Documents is a defined term in the General Conditions), and GC-2.06.B indicates that if the Contract does not establish protocols for such transmittals, then Owner, Construction Manager, and Contractor will jointly develop such protocols. The following Supplementary Conditions may be used to contractually establish transmittal protocols, eliminating the need for joint development after the Contract is underway.

The Supplementary Conditions establishing the Electronic Documents Protocol ("EDP" or "Protocol") define the relationships between the parties relative to responsibilities and limitations governing use of Electronic Documents on the Project. The drafter of the Protocol, with assistance of Owner and Construction Manager, will need to customize for Project-specific management, system, data, and technical needs.

Software and data formats for exchange of Electronic Documents will vary depending on the preferences of the Owner and the needs of the Project. A sample set of basic software and data formats, commonly seen for exchanging information on many horizontal construction projects, has been included in Exhibit A, Software Requirements for Electronic Document Exchange, as a starting point for Project information exchange standards. **(Exhibit A is located at the end of CMA-800, with other exhibits.)** No representation is made that these standards will be applicable to any particular project, and each user must review and modify Exhibit A as needed.

The Protocol addresses the limited data exchange functions intended by the basic software and data formats described in Exhibit A, but the Protocol does not directly address the exchange of "native" design files between the parties for more robust uses beyond such data exchange, nor does it address special issues associated with use of "native" design files, not the least of which is suitability for uses not necessarily intended or anticipated by the file author. While nothing precludes the exchange of "native" files under this Protocol, it is up to the Parties to define how such "native" files may be used and modify the Protocol for criteria of use and any limitations to such use.

Many entities have developed their own data organization standards for "native" files, including such criteria as data model element organization, drawing layer conventions, Building Information Modeling (BIM) and Civil Integrated Management Model protocols, Geographic Information System schema, and integrated and cross-referenced data sets. Additionally, several institutions and design/construction industry organizations have developed and published more comprehensive technical criteria, schemas and plans for use as guides to data organization standards.

Here again, where the data standards require a broader and, generally more collaborative, review and definition of the obligations of the parties, it is up to the parties to significantly modify this Protocol

considering such matters as: 1) party responsible for managing models or system; 2) maintaining integrity of the models or system; 3) ownership of the model or system; 4) enhanced system infrastructure, software, access and security standards; 5) responsibility and liability of respective parties in the role of adding or using elements of common models; 6) additional protocols for quality control and quality assurance; and many other factors.

Some projects feature a Project Website as a part of the EDP. The EDP below includes a clause that may be used to set standards for such a website:

1. Project Website Established by Owner—If Owner, either directly or through the Construction Manager or a third party, elects to establish and operate a Project Website or other electronic information management system during the Project, with or without the project document archive described in SC-2.06.B.2.e, then include and modify Paragraph SC-2.06.B.2.h as appropriate to set forth any standards applicable to use of the website.
2. Project Website Established by Contractor—Under the less common condition in which the operation of the Project Website is delegated by Owner to the Contractor, Paragraph SC-2.06.B.2.h will need to be modified significantly and include the method of compensation, if any, to be paid to Contractor for Project Website services.

To include an Electronic Documents Protocol (EDP), use the following Supplementary Condition:

SC-2.06 Delete Paragraphs 2.06.B and 2.06.C in their entirety and insert the following in their place:

B. Electronic Documents Protocol—The parties shall conform to the following provisions in Paragraphs 2.06.B and 2.06.C, together referred to as the Electronic Documents Protocol ("EDP" or "Protocol") for exchange of electronic transmittals.

1. Basic Requirements

a. To the fullest extent practical, the parties agree to and will transmit and accept Electronic Documents in an electronic or digital format using the procedures described in this Protocol. Use of the Electronic Documents and any information contained therein is subject to the requirements of this Protocol and other provisions of the Contract.

b. The contents of the information in any Electronic Document will be the responsibility of the transmitting party.

c. Electronic Documents as exchanged by this Protocol may be used in the same manner as the printed versions of the same documents that are exchanged using non-electronic format and methods, subject to the same governing requirements, limitations, and restrictions, set forth in the Contract Documents.

d. Except as otherwise explicitly stated herein, the terms of this Protocol will be incorporated into any other agreement or subcontract between a party and any third party for any portion of the Work on the Project, or any Project-related services, where that third party is, either directly or indirectly, required to exchange Electronic Documents with a party or with Construction Manager. Nothing herein

will modify the requirements of the Contract regarding communications between and among the parties and their subcontractors and consultants.

e. When transmitting Electronic Documents, the transmitting party makes no representations as to long term compatibility, usability, or readability of the items resulting from the receiving party's use of software application packages, operating systems, or computer hardware differing from those established in this Protocol.

f. Nothing herein negates any obligation 1) in the Contract to create, provide, or maintain an original printed record version of Drawings and Specifications, signed and sealed according to applicable Laws and Regulations; 2) to comply with any applicable Law or Regulation governing the signing and sealing of design documents or the signing and electronic transmission of any other documents; or 3) to comply with the notice requirements of Paragraph 18.01 of the General Conditions.

2. System Infrastructure for Electronic Document Exchange

a. Each party will provide hardware, operating system(s) software, internet, e-mail, and large file transfer functions ("System Infrastructure") at its own cost and sufficient for complying with the EDP requirements. With the exception of minimum standards set forth in this EDP, and any explicit system requirements specified by attachment to this EDP, it is the obligation of each party to determine, for itself, its own System Infrastructure.

1) The maximum size of an email attachment for exchange of Electronic Documents under this EDP is **[number]** MB. Attachments larger than that may be exchanged using large file transfer functions or physical media.

2) Each Party assumes full and complete responsibility for any and all of its own costs, delays, deficiencies, and errors associated with converting, translating, updating, verifying, licensing, or otherwise enabling its System Infrastructure, including operating systems and software, for use with respect to this EDP.

b. Each party is responsible for its own system operations, security, back-up, archiving, audits, printing resources, and other Information Technology ("IT") for maintaining operations of its System Infrastructure during the Project, including coordination with the party's individual(s) or entity responsible for managing its System Infrastructure and capable of addressing routine communications and other IT issues affecting the exchange of Electronic Documents.

c. Each party will operate and maintain industry-standard, industry-accepted, ISO-standard, commercial-grade security software and systems that are intended to protect the other party from: software viruses and other malicious software like worms, trojans, adware; data breaches; loss of confidentiality; and other threats in the transmission to or storage of information from the other parties, including transmission of Electronic Documents by physical media such as CD/DVD/flash drive/hard drive. To the extent that a party maintains and operates such security software and systems, it shall not be liable to the other party for any breach of system security.

d. In the case of disputes, conflicts, or modifications to the EDP required to address issues affecting System Infrastructure, the parties shall cooperatively resolve the issues; but, failing resolution, the Owner is authorized to make and require reasonable and necessary changes to the EDP to effectuate its original intent. If the changes cause additional cost or time to Contractor, not reasonably anticipated under the original EDP, Contractor may seek an adjustment in price or time under the appropriate process in the Contract.

e. Each party is responsible for its own back-up and archive of documents sent and received during the term of the contract under this EDP, unless this EDP establishes a Project document archive, either as part of a mandatory Project website or other communications protocol, upon which the parties may rely for document archiving during the specified term of operation of such Project document archive. Further, each party remains solely responsible for its own post-project back-up and archive of Project documents after the term of the Contract, or after termination of the Project document archive, if one is established, for as long as required by the Contract and as each party deems necessary for its own purposes.

f. If a receiving party receives an obviously corrupted, damaged, or unreadable Electronic Document, the receiving party will advise the sending party of the incomplete transmission.

g. The parties will bring any non-conforming Electronic Documents into compliance with the EDP. The parties will attempt to complete a successful transmission of the Electronic Document or use an alternative delivery method to complete the communication.

h. The Owner will operate a project information management system (also referred to in this EDP as "Project Website") for use of Owner, Construction Manager, Engineer and Contractor during the Project for exchange and storage of Project-related communications and information. Except as otherwise provided in this EDP or the General Conditions, use of the Project Website by the parties as described in this Paragraph will be mandatory for exchange of Project documents, communications, submittals, and other Project-related information. The following conditions and standards will govern use of the Project Website:

1) **[Describe the period of time during which the Project Website will be operated and be available for reliance by the parties]**;

2) **[Provide any minimum system infrastructure, software licensing and security standards for access to and use of the Project Website]**;

3) **[Describe the types and extent of services to be provided at the Project Website (such as large file transfer, email, communication, and document archives, etc.)]**; and

4) **[Include any other Project Website attributes that may be pertinent to Contractor's use of the facility and pricing of such use]**.

C. Software Requirements for Electronic Document Exchange; Limitations

1. Each party will acquire the software and software licenses necessary to create and transmit Electronic Documents and to read and to use any Electronic Documents received from the other party (and if relevant from third parties), using the software formats required in this section of the EDP.

    a. Prior to using any updated version of the software required in this section for sending Electronic Documents to the other party, the originating party will first notify and receive concurrence from the other party for use of the updated version or adjust its transmission to comply with this EDP.

2. The parties agree not to intentionally edit, reverse engineer, decrypt, remove security or encryption features, or convert to another format for modification purposes any Electronic Document or information contained therein that was transmitted in a software data format, including Portable Document Format (PDF), intended by sender not to be modified, unless the receiving party obtains the permission of the sending party or is citing or quoting excerpts of the Electronic Document for Project purposes.

3. Software and data formats for exchange of Electronic Documents will conform to the requirements set forth in Exhibit A to this EDP, including software versions, if listed.

Guidance Notes—Requests by Contractor for Electronic Documents in Other Formats—SC-2.06.B and SC-2.06.C above constitute an Electronics Document Protocol for transmittal of Electronic Documents. When the Owner desires to retain the option to allow certain documents to be made available to Contractor in formats other than those described in SC-2.06.C of the Protocol, the Owner should add the following Supplementary Condition and release language:

SC-2.06 Supplement Paragraph 2.06 of the General Conditions by adding the following paragraph:

D. Requests by Contractor for Electronic Documents in Other Formats

1. Release of any Electronic Document versions of the Project design documents in formats other than those identified in the Electronic Documents Protocol (if any) or elsewhere in the Contract will be at the sole discretion of the Owner.

2. To extent determined by Owner, in its sole discretion, to be prudent and necessary, release of Electronic Documents versions of Project design documents and other Project information requested by Contractor ("Request") in formats other than those identified in the Electronic Documents Protocol (if any) or elsewhere in the Contract will be subject to the provisions of the Owner's response to the Request, and to the following conditions to which Contractor agrees:

    a. The content included in the Electronic Documents created by Engineer and covered by the Request was prepared by Engineer as an internal working document for Engineer's purposes solely, and is being provided to Contractor on an "AS IS" basis without any warranties of any kind, including, but not limited to any implied warranties of fitness for any purpose. As such, Contractor is advised and acknowledges that the content may not be suitable for Contractor's application or may require substantial modification and independent verification by Contractor.

The content may include limited resolution of models, not-to-scale schematic representations and symbols, use of notes to convey design concepts in lieu of accurate graphics, approximations, graphical simplifications, undocumented intermediate revisions, and other devices that may affect subsequent reuse.

b. Electronic Documents containing text, graphics, metadata, or other types of data that are provided by Engineer to Contractor under the request are only for convenience of Contractor. Any conclusion or information obtained or derived from such data will be at the Contractor's sole risk and the Contractor waives any claims against Engineer or Owner arising from use of data in Electronic Documents covered by the Request.

c. Contractor shall indemnify and hold harmless Owner, Construction Manager, and Engineer and their subconsultants from all claims, damages, losses, and expenses, including attorneys' fees and defense costs arising out of or resulting from Contractor's use, adaptation, or distribution of any Electronic Documents provided under the Request.

d. Contractor agrees not to sell, copy, transfer, forward, give away or otherwise distribute this information (in source or modified file format) to any third party without the direct written authorization of Engineer, unless such distribution is specifically identified in the Request and is limited to Contractor's subcontractors. Contractor warrants that subsequent use by Contractor's subcontractors complies with all terms of the Contract Documents and Owner's response to Request.

3. In the event that Owner elects to provide or directs the Engineer to provide to Contractor any Contractor-requested Electronic Document versions of Project information that is not explicitly identified in the Contract Documents as being available to Contractor, the Owner shall be reimbursed by Contractor on an hourly basis (at $**[number]** per hour) for any engineering costs necessary to create or otherwise prepare the data in a manner deemed appropriate by Engineer.

ARTICLE 3—CONTRACT DOCUMENTS—INTENT, REQUIREMENTS, REUSE

3.01 Intent

Guidance Notes—Furnishing Contract Documents to Contractor—GC-2.02.A indicates that Owner will furnish four printed (hard) copies of the Contract Documents, and one PDF copy. (See Guidance Note for Paragraph 2.02.) GC-3.01.C states that if there is a discrepancy between the electronic version of the Contract Documents and the printed (hard copy) version, then the printed version controls. If Owner is not furnishing PDF or other electronic files of the Contract Documents, then GC-3.01.C becomes superfluous, and the following may be used:

SC-3.01 Delete Paragraph 3.01.C in its entirety.

ARTICLE 4—COMMENCEMENT AND PROGRESS OF THE WORK

4.05 Delays in Contractor's Progress

Guidance Notes—Defining Weather-related Delays—GC-4.05 is arguably one of the most important provisions in the General Conditions because it allocates the risk of delays in the Work. Delays may be costly to the Contractor and Owner, and detrimental to the success of the Project. Delays beyond the Contract Times have the potential to result in the imposition of liquidated and special damages included in the Contract. When there is any change in the allocation of risks for delays from what is included in GC-4.05, a corresponding SC-4.05 is required.

Particular attention should be paid to the provisions of GC-4.05.C, which is the Contract's force majeure clause governing allocation of risks for delays that are beyond the control of both the Contractor and the Owner. Because weather-related delays are so common, the drafter of the Supplementary Conditions may want to consider including a more specific provision regarding weather-related delays, particularly in cases where adherence to the Contract Times is extremely important and where the Work will be of such a nature as to be susceptible to weather-related delays. Sample contract language is presented below as SC-4.05.C. As the following commentary indicates, other approaches are possible and should be considered.

The General Conditions indicate at GC-4.05.C.2 that the Contractor will be entitled to an equitable adjustment in Contract Times if the Work is delayed by "abnormal weather conditions." This standard will be sufficient in most situations and is applicable to the full range of possible bad weather events. However, the drafter of the specific Contract may wish to define "abnormal weather" by reference to objective, measurable weather factors. To draft a supplemental weather-delay provision that defines abnormal weather, the drafter must consider the threshold level of severity of weather that may affect the progress of the Work—the Contractor must anticipate and cope with the weather up to the defined threshold, and if the threshold is reached or exceeded, the Contractor will be entitled to additional time to complete the Work. One such threshold level of severity could be specified to apply to the entire construction (this is the approach taken in the sample SC-4.05.C), or separate levels could be specified for different elements of the Work. As an example of the second alternative, and while it is acknowledged that the parties may not know specific construction activities at the time the initial Contract Documents are prepared, presumed weather severities could be tailored to the materials or type of construction involved. For example, if the Work involves reinforced concrete, the weather conditions that could delay concrete pouring might not reasonably delay erection of formwork or placement of reinforcing steel. The possibility of lingering effects should be considered when drafting such provisions.

In some localities there may be well established and widely accepted procedures for monitoring and evaluating the weather impacts on a construction project, such as the procedures set forth in municipal or state department of transportation standard specifications. The drafter of the Contract Documents may wish to adopt such procedures if relevant to the specific project, as an alternative to the sample procedures set out in the optional SC-4.05.C.

SC-4.05.C, if adopted, ties the definition of "abnormal weather" to two factors, precipitation and temperature. The drafter must establish a threshold amount of daily precipitation that is tolerable in the

specific location—any day that incurs an amount at or above the threshold is a bad weather day. Similarly, the drafter must define acceptable temperature thresholds—dropping below the minimum or rising above the maximum will result in categorization as a bad weather day. Finally, the drafter must define how many bad weather days in each category (precipitation, excessively cold weather, excessively hot weather) are foreseeable (essentially "normal" or tolerable) in each month. In most locations, the normal expectation for bad weather in a month will vary with the seasons.

Even if the parties anticipate a short project duration, the table (Exhibit B—Foreseeable Bad Weather Days) that is incorporated in SC-4.05.C should encompass the entire calendar year to ensure that, regardless of postponements, suspensions, or delays, the Work as actually performed is contractually covered by SC-4.05.C. **(SC-4.05.C includes and incorporates the table identified as Exhibit B—Foreseeable Bad Weather Days (located with other exhibits at the end of CMA-800)).**

An important step in drafting a supplemental clause regarding weather delays is establishing the source for actual weather records and site conditions (for lingering effects) and the required content of such records. A variety of sources may be viable options for weather records, but in general it is better when the weather monitoring site is relatively close to the Site. Sources may include the National Weather Service, media outlets that maintain weather-monitoring networks, certain schools and universities, and possibly wastewater conveyance utilities. Before specifying the source of data, verify that the data is available, and the type of data collected.

The text of SC-4.05.C, defining "abnormal weather" based on precipitation and temperature extremes, is indicated below. If the drafter elects to use this optional Supplementary Condition, edit the example language to suit the Project, and provide the weather thresholds required in the text and in the Exhibit B table.

A few specific Guidance points for SC-4.05.C:

1. Edit Paragraphs SC-4.05.C.5.b "1).i)" and "1).ii)", to suit the Project; the times specified in Paragraph "1).i)" are presumed times for wet weather to render the Site inoperable for the following workday.
2. Based on recorded weather data available from the weather station indicated in Paragraph SC-4.05.C.5.b "2)", insert in SC-4.05.C.5.b "1).i)" and "1).ii)" the threshold one-day precipitation quantity and the threshold temperatures (minimum and maximum).
3. Insert in the appropriate blanks in Paragraph SC-4.05.C.5.b "2)" below the entity operating and maintaining the weather station, and the location of the weather station; for example, "National Weather Service weather monitoring station at the Buffalo-Niagara International Airport." For the selected entity and site, verify the data types and frequency available for the particular weather monitoring station.
4. Based on data from the weather monitoring station indicated in Paragraph SC-4.05.C.5.b "2)", fill in all the cells in the table identified as Exhibit B—Foreseeable Bad Weather Days. Optimally, data indicated should be averaged over a period of not less than five years although other durations may be appropriate. Edit the sample language when other foreseeable weather factors can affect the construction, such as high winds or other factors.

SC-4.05 Amend Paragraph 4.05.C by adding the following subparagraphs:

5. Weather-Related Delays

a. If "abnormal weather conditions" as set forth in Paragraph 4.05.C.2 of the General Conditions are the basis for a request for an equitable adjustment in the Contract Times, such request must be documented by data substantiating each of the following: 1) that weather conditions were abnormal for the period of time in which the delay occurred, 2) that such weather conditions could not have been reasonably anticipated, and 3) that such weather conditions had an adverse effect on the Work as scheduled.

b. The existence of abnormal weather conditions will be determined on a month-by-month basis in accordance with the following:

1) Every workday on which one or more of the following conditions exist will be considered a "bad weather day":

i) Total precipitation (as rain equivalent) occurring between 7:00 p.m. on the preceding day (regardless of whether such preceding day is a workday) through 7:00 p.m. on the workday in question equals or exceeds **[threshold precipitation quantity]** of precipitation (as rain equivalent, based on the snow/rain conversion indicated in the table entitled Foreseeable Bad Weather Days; such table is hereby incorporated in this SC-4.05.C by reference.

ii) Ambient outdoor air temperature at 11:00 a.m. is equal to or less than the following low temperature threshold: **[temperature]** degrees Fahrenheit; or, at 3:00 p.m. the ambient outdoor temperature is equal to or greater than the following high temperature threshold: **[temperature]** degrees Fahrenheit.

2) Determination of actual bad weather days during performance of the Work will be based on the weather records measured and recorded by **[name of the entity operating the weather station]** weather monitoring station at **[location of the weather monitoring station]**.

3) Contractor shall anticipate the number of foreseeable bad weather days per month indicated in the table in Exhibit **[exhibit number]**—Foreseeable Bad Weather Days.

4) In each month, every bad weather day exceeding the number of foreseeable bad weather days established in the table in Exhibit **[exhibit number]**—Foreseeable Bad Weather Days will be considered as "abnormal weather conditions." The existence of abnormal weather conditions will not relieve Contractor of the obligation to demonstrate and document that delays caused by abnormal weather are specific to the planned work activities or that such activities thus delayed were on Contractor's then-current Progress Schedule's critical path for the Project.

ARTICLE 5—SITE, SUBSURFACE AND PHYSICAL CONDITIONS, HAZARDOUS ENVIRONMENTAL CONDITIONS

5.03 Subsurface and Physical Conditions

Guidance Notes—Reports and Drawings Containing Technical Data (Subsurface; Physical Conditions)

1. This is a mandatory Supplementary Condition. Paragraph 5.03, Subsurface and Physical Conditions, of the General Conditions requires the identification of reports and drawings that contain Technical Data regarding subsurface and physical conditions at or adjacent to the Site. See GC-5.03.A.1 and 2. This will typically include current and recent geotechnical reports, drawings of existing subsurface and surface conditions (including structures such as buildings and foundations), and any other documents that Owner or Engineer has determined to contain reliable Site information. GC-5.03.A.3 requires the identification of the specific Technical Data in the reports and drawings. This is an important task because only the Technical Data is entitled to reliance by Contractor—the remainder of the contents of the reports and drawings does not receive this elevated status.
2. Typical examples of the contents of Site-related reports and drawings that might be categorized by Owner or Engineer as Technical Data for contractual purposes are:
    a. boring logs;
    b. recorded measurements of subsurface water levels;
    c. assessments of the condition of subsurface facilities;
    d. laboratory test results; and
    e. mapping based on remote sensing.
3. Use SC-5.03, presented immediately below, for the purpose of identifying the Site condition documents that contain Technical Data, and the specific Technical Data contained in each report and drawing.
4. In a change from the 2007 and 2013 editions of the EJCDC Construction Series documents, the user should not list all archival and other documents concerning the Site here in the Supplementary Conditions—as of 2018 (for the Construction Series documents) and 2021 (for the Construction Manager as Advisor Series documents), for GC/SC-5.03 list in the Supplementary Conditions only those documents determined by Owner or Engineer to contain Technical Data.
5. Filling in the tables—SC-5.03.E contains a table for listing reports that contain Technical Data, and identifying that data; and SC-5.03.F contains a table for listing drawings that contain Technical Data. Examples of a completed row from each table follow, for illustrative purposes only:

    E. The following table lists the reports of explorations and tests of subsurface conditions at or adjacent to the Site that contain Technical Data, and specifically identifies the Technical Data in the report upon which Contractor may rely:

Report Title	Date of Report	Technical Data
Results of Investigation of Subsoil Conditions and Geotechnical Recommendations—Riverside Wastewater Treatment Plant	August 8, 2018	Boring Log, Test Site 1, at page 32 of Report.

F. The following table lists the drawings of existing physical conditions at or adjacent to the Site, including those drawings depicting existing surface or subsurface structures at or adjacent to the Site (except Underground Facilities), that contain Technical Data, and specifically identifies the Technical Data upon which Contractor may rely:

Drawings Title	Date of Drawings	Technical Data
Record Drawings—Route 24 Overpass Abutment Project	November 30, 2012	All information in drawings, with the exception of the contents of Drawings 001 and 005.

6. In addition to requiring the identification of Technical Data in SC-5.03, EJCDC also requires that Owner identify and disclose to Bidders archival and other Site-related documents known to Owner (but that do not contain Technical Data and therefore are not listed here in the Supplementary Conditions), in a list distributed with the Instructions to Bidders. See Instructions to Bidders, Article 5. The Bidders may then review documents of interest, and perhaps glean information useful to them in fashioning a bid and planning the Work. There is no requirement, however, that Bidders or the Contractor review the documents disclosed in the Instructions to Bidders, nor are they held accountable for any data or information in such documents; similarly, Owner has not verified the data or information in these documents, and is not responsible for their accuracy. The requirement that Contractor review and take responsibility for Site information is limited to information in (1) the Contract Documents and (2) the Technical Data.

7. If the Supplementary Conditions neglect to expressly identify the Technical Data entitled to reliance, then certain data in documents such as a geotechnical report, environmental report, or similar investigative report prepared for the current Project are, by default definition, Technical Data upon whose accuracy Contractor may rely. See the default definition of Technical Data, Paragraph GC-1.01.A.46.b.

8. Paragraph GC-5.03.B clarifies that Underground Facilities are shown or indicated in the Drawings. Requirements with respect to Underground Facilities are set forth in Paragraph GC-5.05.

9. Paragraph GC-5.06 requires disclosure of documents relating to Hazardous Environmental Conditions at the Site. Note that these requirements differ from the requirements regarding disclosure of documents relating to subsurface and physical conditions in GC-5.03, and here in SC-5.03.

10. If Owner elects to furnish a Geotechnical Baseline Report (GBR), use the alternate SC/GBR-5.03 and SC/GBR-5.04 presented in Exhibit C to this document, rather than the SC-5.03 version immediately following. **(Exhibit C is located at the end of CMA-800.)**

SC-5.03 Add the following new paragraphs immediately after Paragraph 5.03.D:

E. The following table lists the reports of explorations and tests of subsurface conditions at or adjacent to the Site that contain Technical Data, and specifically identifies the Technical Data

in the report upon which Contractor may rely: **[If there are no such reports, so indicate in the table.]**

Report Title	Date of Report	Technical Data
		[Identify Technical Data]

F. The following table lists the drawings of existing physical conditions at or adjacent to the Site, including those drawings depicting existing surface or subsurface structures at or adjacent to the Site (except Underground Facilities), that contain Technical Data, and specifically identifies the Technical Data upon which Contractor may rely: **[If there are no such drawings, so indicate in the table.]**

Drawings Title	Date of Drawings	Technical Data
		[Identify Technical Data]

G. Contractor may examine copies of reports and drawings identified in SC-5.03.E and SC-5.03.F that were not included with the Bidding Documents at **[location]** during regular business hours, or may request copies from Construction Manager.

5.06 Hazardous Environmental Conditions

Guidance Notes—Reports and Drawings Regarding Hazardous Environmental Conditions—This is a mandatory Supplementary Condition. Paragraph 5.06 of the General Conditions contemplates that Owner will identify all known documents regarding Hazardous Environmental Conditions (HEC) that have been identified at or adjacent to the Site. It also requires the identification of Technical Data (upon whose accuracy Contractor may rely) contained in such documents. Use SC-5.06, presented immediately below, to identify the known HEC documents. Refer to Guidance Note 5 preceding SC-5.03 for examples of completed rows of tables similar to the tables in SC-5.06. Also note that if either a geotechnical report or environmental report has been prepared for the Project, and the Supplementary Conditions neglect to expressly identify reports or drawings or reports' or drawings' Technical Data upon whose accuracy Contractor may rely, then the default definition of Technical Data in Paragraph GC-1.01.A.46.b of the General Conditions will apply.

SC-5.06 Add the following new paragraphs immediately after Paragraph 5.06.A.3:

4. The following table lists the reports known to Owner relating to Hazardous Environmental Conditions at or adjacent to the Site, and the Technical Data (if any) upon which Contractor may rely: **[If there are no such reports, so indicate in the table]**

Report Title	Date of Report	Technical Data
		[Identify Technical Data]

5. The following table lists the drawings known to Owner relating to Hazardous Environmental Conditions at or adjacent to the Site, and Technical Data (if any) contained in such Drawings upon which Contractor may rely: **[If there are no such drawings, so indicate in the table]**

Drawings Title	Date of Drawings	Technical Data
		[Identify Technical Data]

ARTICLE 6—BONDS AND INSURANCE

6.01 Performance, Payment, and Other Bonds

Guidance Notes—Performance and Payment Bonds

1. Deletion of Performance/Payment Bond Requirement—Paragraph 6.01.A of the General Conditions requires that Contractor furnish a performance bond and a payment bond. If performance and payment bonds are not required for a specific Contract, include a Supplementary Condition that deletes the GC-6.01.A requirement.
2. Performance/Payment Bond Forms—Paragraph 6.01.C requires that all bonds be "in the form included in the Bidding Documents or otherwise specified by Owner prior to execution of the Contract…." Some Owners may have in-house bond forms that must be used, or in some instances state or local law may mandate a specific bond form. In all other cases, EJCDC recommends that its standard performance and payment bond forms, EJCDC® C-610, Performance Bond (2018), and EJCDC® C-615, Payment Bond (2018), be included or specified. These bond forms were developed in collaboration by EJCDC with other principal design, construction, and surety organizations, and as a result contain industry-standard wording, organization, and terminology. (The 2010, 2013, and 2018 editions of these two bonds are essentially identical, and interchangeable.) Most sureties and bond producers have templates of the EJCDC bonds and can issue them readily.
3. If the EJCDC performance and payment bonds are required, EJCDC recommends that prospective Bidders or contractors be given sample copies of the two bond forms (typically as a part of the Bidding Documents), and buttress the requirement with an express Supplementary Condition specifying the use of the standard EJCDC bonds. The Supplementary Condition for that purpose follows.

SC-6.01 Add the following paragraphs immediately after Paragraph 6.01.A:

1. Required Performance Bond Form—The performance bond that Contractor furnishes will be in the form of EJCDC® C-610, Performance Bond (2010, 2013, or 2018 edition).
2. Required Payment Bond Form—The payment bond that Contractor furnishes will be in the form of EJCDC® C-615, Payment Bond (2010, 2013, or 2018 edition).

Guidance Notes—"Other Bonds," Warranty Bond

1. Other Bonds

Paragraph 6.01.B states that if Contractor is required to provide a bond other than a performance or payment bond, the requirement will be set forth in the Supplementary Conditions. This statement is not relevant or related to a requirement that a Bidder must furnish a Bid Bond: such a requirement (if any) is part of the bidding process that occurs before entry into the construction contract, and the bid bond requirement would be included in the Instructions to Bidders. See Instructions to Bidders, Article 8. Rather, the reference is to any special purpose bond that is required.

2. Warranty Bond

Perhaps the most common "other" or special purpose bond that might be required is the warranty bond (also called a maintenance bond). A warranty bond provides assurance that Contractor (or if necessary, the surety) will meet the contractual correction period obligations during a specified period of time after construction has been completed.

SC-6.01.B.1 presents model wording for requiring that Contractor furnish a warranty bond. EJCDC's standard form for such a bond is EJCDC® C-612, Warranty Bond (2018); if SC-6.01.B.1 is used, the Warranty Bond form should be provided to bidders or prospective contractors with the Supplementary Conditions (typically as a part of the Bidding Documents).

The C-612 Warranty Bond is intended to be used to provide bonding for a period greater than one year after Substantial Completion. EJCDC® C-610, Performance Bond (2018) already obligates the surety with respect to the correction of defective Work (C-610, Paragraph 7.1), and has a duration sufficient to allow bond claims based on defects discovered during the standard one-year correction period (GC-6.01.A; C-610, Paragraph 11); and the purchase price charged for the performance bond is based on that bond remaining in effect during the one-year correction period. Thus, a warranty bond is not needed if the correction period remains the standard one year, and indeed would be redundant with the performance bond if used solely to cover that one-year correction period.

To avoid possible conflicts regarding responsibilities between the surety that issues the performance bond and the surety that issues the warranty bond, EJCDC recommends a requirement that the two bonds be issued by the same surety. See SC-6.01.B.3.

Although in theory a warranty bond could be furnished for a very lengthy duration (four or more years beyond Substantial Completion), such a lengthy bond would probably be commercially difficult to obtain and very expensive. EJCDC recommends an endpoint for the warranty bond of either two years after Substantial Completion (essentially extending the bonded coverage by one additional year) or three years after Substantial Completion (extending the bonded coverage by two additional years). These two recommended options are embedded in the C-612 Warranty Bond form.

By its terms the EJCDC warranty bond applies to the contractual correction obligation at GC-15.08. SC-6.01.B.2 extends that contractual correction period beyond its standard one-year duration—the contractual extension should match the Warranty Bond duration. For the sake of clarity, EJCDC recommends a cross-reference to Supplementary Condition SC-15.08.A—see Article 15 below.

Because correction period work is, in total, likely to cost only a modest fraction of the Contract Price, warranty bonds typically have a bond amount that is 10 or 15 percent of the Contract Price. The precise percentage required should be clearly indicated in the Supplementary Condition.

The suggested wording to extend the correction period and require that Contractor furnish a warranty bond follows:

SC-6.01 Add the following paragraphs immediately after Paragraph 6.01.B:

1. The correction period specified as one year after the date of Substantial Completion in Paragraph 15.08.A of the General Conditions is hereby revised to be **[number—either 2, 3, or other]** years after Substantial Completion.
2. After Substantial Completion, Contractor shall furnish a warranty bond issued in the form of EJCDC® C-612, Warranty Bond (2018). The warranty bond must be in a bond amount of **[number—either 10, 15, or other]** percent of the final Contract Price. The warranty bond period will extend to a date **[number—either 2, 3, or other]** years after Substantial Completion of the Work. Contractor shall deliver the fully executed warranty bond to Owner prior to or with the final application for payment, and in any event no later than 11 months after Substantial Completion.
3. The warranty bond must be issued by the same surety that issues the performance bond required under Paragraph 6.01.A of the General Conditions.

6.02 Insurance—General Provisions

Guidance Notes—Modifying Insurance Company Ratings Requirements—Paragraph 6.02.B of the General Conditions requires that all companies that provide insurance policies required under this Contract must have an A.M. Best rating of A-VII or better, unless a different standard is indicated in the Supplementary Conditions. The A.M. Best ratings are based on the financial strength and size of the insurance company, with A-VII representing a commonly used standard. SC-6.02 is the location for noting any different standard, whether narrower or broader.

In some states, not all worker's compensation insurers obtain A.M. Best ratings. The Owner may wish to include the following optional exception (modified to meet applicable provisions in the state) to the requirement in Paragraph 6.02.B:

SC-6.02 Add the following paragraph immediately after Paragraph 6.02.B:

1. Contractor may obtain worker's compensation insurance from an insurance company that has not been rated by A.M. Best, provided that such company (a) is domiciled in the state in which the Project is located, (b) is certified or authorized as a worker's compensation insurance provider by the appropriate state agency, and (c) has been accepted to provide worker's compensation insurance for similar projects by the state within the last 12 months.

Guidance Notes—Specifying Insurance to be carried by Subcontractors and Suppliers—GC-6.02.H indicates that Contractor must require its Subcontractors and Suppliers to purchase and maintain insurance that is appropriate for their participation in the Project. This provision intentionally gives Contractor considerable latitude in risk management with respect to its Subcontractors and Suppliers. In most cases the Contractor will have more familiarity than Owner with the risks associated with particular

types of subcontracted work, with the Subcontractors and Suppliers selected, and with the insurance coverage requirements that should be imposed. Occasionally, however, the Owner will choose to establish insurance requirements that apply to some or all Subcontractors or Suppliers. SC-6.02.H.3 may be used for that purpose.

SC-6.02 Add the following paragraph immediately after Paragraph 6.02.H.2 of the General Conditions:

3. For the following Subcontractors, Suppliers, or categories of Subcontractor or Supplier, Contractor shall require the following specified insurance, with policy limits as stated: **[Identify Subcontractors, Suppliers, or categories of same, and insert specific insurance requirements and policy limits]**

6.03 Contractor's Insurance

Guidance Notes—Specifying Contractor's Insurance, Including Coverage Limits—This is a mandatory Supplementary Condition, because it is the location for specifying the insurance policies, coverages, and endorsements to be maintained by Contractor (other than builder's risk and other property insurance, which are addressed in SC-6.04), and the minimum coverage limits. However, not all components of SC-6.03 will be used for the specific Contract that is being drafted, and many parts may need to be modified or revised to meet specific insurance requirement objectives. Consultation with risk managers, insurance specialists, and legal counsel is a necessity.

The information set forth in this Supplementary Condition (and in all other contractual provisions regarding bonds and insurance) is typically provided by Owner, either directly or through written instructions given to Construction Manager. See EJCDC® CMA-051, Construction Manager's Letter to Owner Requesting Instructions Concerning Bonds and Insurance (2021), and EJCDC® CMA-052, Owner's Instructions to Construction Manager Concerning Bonds and Insurance (2021).

The user should refer to the following Guidance points with respect to specific features of SC-6.03, including categories of insurance with unique features (such as Umbrella or Excess Liability insurance, SC-6.03.K), or that are required only under specific circumstances (such as Railroad Protective Liability insurance, SC-6.03.O):

1. Deciding Whether to Require Umbrella/Excess Insurance—SC-6.03.K, Umbrella or Excess Liability, is a standard insurance provision that requires Contractor to carry an Umbrella or Excess Liability policy. Some Owners do not require that Contractor carry Umbrella/Excess insurance, perhaps viewing the decision to obtain and maintain Umbrella/Excess, and the specific amount of Umbrella/Excess coverage, as risk management choices best left to the Contractor; and presumably in such cases the Owner accepts that the primary policies (most importantly Commercial General Liability), as specified, provide adequate protection.

   If Owner revises the standard terms by deleting the requirement that Contractor provide Excess or Umbrella liability insurance, then Owner may wish to consider requiring (in SC-6.03.G, Commercial General Liability—Form and Content) that "The general aggregate limits under SC-6.03.I (Commercial General Liability—Minimum Policy Limits) be maintained fully available for this Contract by obtaining and maintaining a Designated Construction Project General Aggregate Limit endorsement, or equivalent."

2. Allowing the Umbrella/Excess Insurance to Satisfy Underlying Coverage Requirements

   a. The optional Supplementary Condition SC-6.03.L, Using Umbrella or Excess Liability to Meet CGL and Other Policy Limit Requirements, is used to contractually authorize the common practice in which an Owner allows Contractor to meet the required minimum policy limits for commercial general liability and other primary liability policies by attributing a portion of Umbrella/Excess coverage to the underlying policy or policies. For example, if the Contract requires $5 million in CGL coverage; SC-6.03.L specifies (in the brackets in the last sentence) that a minimum of $3 million of the Umbrella must remain unattributed to any underlying policy; and Contractor has a CGL policy of $3 million and a $10 million Umbrella policy, then $2 million of the Umbrella could be attributed to the CGL, to meet the $5 million CGL minimum. Under that example, such attribution would still leave a "balance" of $8 million under the Umbrella, thus satisfying the requirement that a minimum of $3 million of the Umbrella remain unattributed to any underlying policy.

   b. In those cases in which SC-6.03.L, Using Umbrella or Excess Liability Insurance to Meet CGL and Other Policy Limit Requirements, is used, it is important fill in the brackets in the last sentence, specifying the unattributed balance that is the appropriate amount for the specific Contract.

   c. Not all Owners will choose to allow an Umbrella/Excess policy to provide partial satisfaction of a primary liability policy coverage requirement, preferring the simpler approach of Contractor providing an underlying policy (most notably, CGL) in the full amount required. When this is the preference, do not include SC-6.03.L, Using Umbrella or Excess Liability Insurance to Meet CGL and Other Policy Limit Requirements.

3. Combining Contractor's Pollution and Professional Liability Policies—Contractor's Pollution Liability Insurance (SC-6.03.M) and Contractor's Professional Liability Insurance (SC-6.03.N) are presented as two distinct required policies. However, Contractor's Pollution Liability and Contractor's Professional Liability policies are sometimes sold as a hybrid or combined policy. After consulting with its risk managers, Owner may wish to supplement the two provisions with a statement indicating that Contractor may provide such a combination policy, as an acceptable alternative to providing two separate policies, at a stated policy limit for the combination policy.

4. Railroad Protective Liability Policy—If any portion of the Work will take place within 50 feet of railroad-owned or controlled property, the railroad company will likely require that the Contractor obtain a railroad protective liability policy. Use Paragraph SC-6.03.O below if such a policy is required.

   A railroad protective liability policy is for the benefit of the railroad company (not the Contractor or Owner), providing the railroad with protection from both liability and property damage it incurs because of the Contractor's construction activities. The railroad protective policy is site-specific and applies only when work is in progress—it does not include completed operations coverage.

   The standard coverage includes bodily injury or property damage that arises out of the acts or omissions of railroad employees, to the extent the acts or omissions are related to or in connection with the Contractor's activities. The coverage of physical damage to property should apply to real and personal property that is owned or leased by the railroad, including rolling stock, tracks, trestles, buildings, and structures.

   The railroad will usually have specific requirements for the railroad protective policy, including per-claim and aggregate policy limits, coverages, and the formal names of the railroad and other related

insureds. In most cases the railroad will require an indemnification from Contractor, in addition to the insurance policy. The Owner or other drafter should include all known railroad requirements here or elsewhere in the Contract, if the requirements are known at the time the Contract is drafted.

5. Unmanned Aerial Vehicle Liability Insurance—The use of aerial drones on construction projects is increasingly common. If there is a possibility that Contractor will use drones on the specific Project, Owner may wish to include SC-6.03.P, Unmanned Aerial Vehicle Liability Insurance.

6. Other Required Insurance—If Owner or its insurance advisors or risk managers have identified other insurance policies that Contractor should obtain and maintain, based on the Owner's or Project's specific needs, identify the required policies and minimum policy limits at SC-6.03.Q. Note that Builder's Risk insurance is separately addressed in GC/SC-6.04.

SC-6.03 Supplement Paragraph 6.03 with the following provisions after Paragraph 6.03.C:

D. Other Additional Insureds—As a supplement to the provisions of Paragraph 6.03.C of the General Conditions, the commercial general liability, automobile liability, umbrella or excess, pollution liability, and unmanned aerial vehicle liability policies must include as additional insureds (in addition to Owner, Construction Manager, and Engineer) the following: **[Here list by legal name (not category, role, or classification) other persons or entities to be included as additional insureds. See GC-6.03.C.]**

E. Workers' Compensation and Employer's Liability—Contractor shall purchase and maintain workers' compensation and employer's liability insurance, including, as applicable, United States Longshoreman and Harbor Workers' Compensation Act, Jones Act, stop-gap employer's liability coverage for monopolistic states, and foreign voluntary workers' compensation (from available sources, notwithstanding the jurisdictional requirement of Paragraph 6.02.B of the General Conditions).

Workers' Compensation and Related Policies	**Policy limits of not less than:**
Workers' Compensation	
State	Statutory
Applicable Federal (e.g., Longshoreman's)	Statutory
Foreign voluntary workers' compensation (employer's responsibility coverage), if applicable	Statutory
Jones Act (if applicable)	
Bodily injury by accident—each accident	$
Bodily injury by disease—aggregate	$
Employer's Liability	
Each accident	$
Each employee	$
Policy limit	$

Workers' Compensation and Related Policies	Policy limits of not less than:
Stop-gap Liability Coverage	
For work performed in monopolistic states, stop-gap liability coverage must be endorsed to either the worker's compensation or commercial general liability policy with a minimum limit of:	$

F. Commercial General Liability—Claims Covered—Contractor shall purchase and maintain commercial general liability insurance, covering all operations by or on behalf of Contractor, on an occurrence basis, against claims for:

1. damages because of bodily injury, sickness or disease, or death of any person other than Contractor's employees,
2. damages insured by reasonably available personal injury liability coverage, and
3. damages because of injury to or destruction of tangible property wherever located, including loss of use resulting therefrom.

G. Commercial General Liability—Form and Content—Contractor's commercial liability policy must be written on a 1996 (or later) Insurance Services Organization, Inc. (ISO) commercial general liability form (occurrence form) and include the following coverages and endorsements:

1. Products and completed operations coverage.
   a. Such insurance must be maintained for three years after final payment.
   b. Contractor shall furnish Owner and each other additional insured (as identified in the Supplementary Conditions or elsewhere in the Contract) evidence of continuation of such insurance at final payment and three years thereafter.
2. Blanket contractual liability coverage, including but not limited to coverage of Contractor's contractual indemnity obligations in Paragraph 7.18.
3. Severability of interests and no insured-versus-insured or cross-liability exclusions.
4. Underground, explosion, and collapse coverage.
5. Personal injury coverage.
6. Additional insured endorsements that include both ongoing operations and products and completed operations coverage through ISO Endorsements CG 20 10 10 01 and CG 20 37 10 01 (together). If Contractor demonstrates to Owner that the specified ISO endorsements are not commercially available, then Contractor may satisfy this requirement by providing equivalent endorsements.
7. For design professional additional insureds, ISO Endorsement CG 20 32 07 04 "Additional Insured—Engineers, Architects or Surveyors Not Engaged by the Named Insured" or its equivalent.

H. Commercial General Liability—Excluded Content—The commercial general liability insurance policy, including its coverages, endorsements, and incorporated provisions, must not include any of the following:

1. Any modification of the standard definition of "insured contract" (except to delete the railroad protective liability exclusion if Contractor is required to indemnify a railroad or others with respect to Work within 50 feet of railroad property).
2. Any exclusion for water intrusion or water damage.
3. Any provisions resulting in the erosion of insurance limits by defense costs other than those already incorporated in ISO form CG 00 01.
4. Any exclusion of coverage relating to earth subsidence or movement.
5. Any exclusion for the insured's vicarious liability, strict liability, or statutory liability (other than worker's compensation).
6. Any limitation or exclusion based on the nature of Contractor's work.
7. Any professional liability exclusion broader in effect than the most recent edition of ISO form CG 22 79.

I. Commercial General Liability—Minimum Policy Limits

Commercial General Liability	**Policy limits of not less than:**
General Aggregate	$
Products—Completed Operations Aggregate	$
Personal and Advertising Injury	$
Bodily Injury and Property Damage—Each Occurrence	$

J. Automobile Liability—Contractor shall purchase and maintain automobile liability insurance for damages because of bodily injury or death of any person or property damage arising out of the ownership, maintenance, or use of any motor vehicle. The automobile liability policy must be written on an occurrence basis.

Automobile Liability	**Policy limits of not less than:**
Bodily Injury	
Each Person	$
Each Accident	$
Property Damage	
Each Accident	$
[or]	
Combined Single Limit	
Combined Single Limit (Bodily Injury and Property Damage)	$

K. Umbrella or Excess Liability—Contractor shall purchase and maintain umbrella or excess liability insurance written over the underlying employer's liability, commercial general liability, and automobile liability insurance described in the Paragraphs above. The coverage afforded must be at least as broad as that of each and every one of the underlying policies.

Excess or Umbrella Liability	**Policy limits of not less than:**
Each Occurrence	$
General Aggregate	$

L. Using Umbrella or Excess Liability Insurance to Meet CGL and Other Policy Limit Requirements—Contractor may meet the policy limits specified for employer's liability, commercial general liability, and automobile liability through the primary policies alone, or through combinations of the primary insurance policy's policy limits and partial attribution of the policy limits of an umbrella or excess liability policy that is at least as broad in coverage as that of the underlying policy, as specified herein. If such umbrella or excess liability policy was required under this Contract, at a specified minimum policy limit, such umbrella or excess policy must retain a minimum limit of $**[specify amount]** after accounting for partial attribution of its limits to underlying policies, as allowed above.

M. Contractor's Pollution Liability Insurance—Contractor shall purchase and maintain a policy covering third-party injury and property damage, including cleanup costs, as a result of pollution conditions arising from Contractor's operations and completed operations. This insurance must be maintained for no less than three years after final completion.

Contractor's Pollution Liability	**Policy limits of not less than:**
Each Occurrence/Claim	$
General Aggregate	$

N. Contractor's Professional Liability Insurance—If Contractor will provide or furnish professional services under this Contract, through a delegation of professional design services or otherwise, then Contractor shall be responsible for purchasing and maintaining applicable professional liability insurance. This insurance must cover negligent acts, errors, or omissions in the performance of professional design or related services by the insured or others for whom the insured is legally liable. The insurance must be maintained throughout the duration of the Contract and for a minimum of two years after Substantial Completion. The retroactive date on the policy must pre-date the commencement of furnishing services on the Project.

Contractor's Professional Liability	**Policy limits of not less than:**
Each Claim	$
Annual Aggregate	$

O. Railroad Protective Liability Insurance—Prior to commencing any Work within 50 feet of railroad-owned and controlled property, Contractor shall (1) endorse its commercial general liability policy with ISO CG 24 17, removing the contractual liability exclusion for work within 50 feet of a railroad, (2) purchase and maintain railroad protective liability insurance meeting the following requirements, (3) furnish a copy of the endorsement to Owner, and (4) submit a copy of the railroad protective policy and other railroad-required documentation to the railroad, and notify Owner of such submittal.

[Insert additional specific requirements, commonly set by the railroad, here.]

Railroad Protective Liability Insurance	**Policy limits of not less than:**
Each Claim	$
Aggregate	$

P. Unmanned Aerial Vehicle Liability Insurance—If Contractor uses unmanned aerial vehicles (UAV—commonly referred to as drones) at the Site or in support of any aspect of the Work, Contractor shall obtain UAV liability insurance in the amounts stated; name Owner, Construction Manager, Engineer, and all individuals and entities identified in the Supplementary Conditions as additional insureds; and provide a certificate to Owner confirming Contractor's compliance with this requirement. Such insurance will provide coverage for property damage, bodily injury or death, and invasion of privacy.

Unmanned Aerial Vehicle Liability Insurance	**Policy limits of not less than:**
Each Claim	$
General Aggregate	$

Q. Other Required Insurance—**[Here list additional types and amounts of insurance that Contractor is required to carry.]**

6.04 Builder's Risk and Other Property Insurance

Guidance Notes—Owner Purchase of Builder's Risk Insurance—The General Conditions require the Contractor to purchase and maintain builder's risk insurance. GC-6.04.A. The detailed requirements for the builder's risk insurance are set forth here in the Supplementary Conditions, in provisions such as SC-6.04.F, G, and H. (The option of requiring the Contractor to purchase an installation floater, as an alternative to builder's risk insurance, is presented in the alternate SC-6.04.A that follows the more commonly used builder's risk clauses.)

In the event that the builder's risk purchase requirement will be flipped, such that the Owner, rather than the Contractor, will purchase the builder's risk insurance, use the following SC-6.04.A:

SC-6.04 Delete Paragraph 6.04.A and insert the following in its place:

A. Owner shall purchase and maintain builder's risk insurance upon the Work on a completed value basis, in the amount of the Work's full insurable replacement cost (subject to such deductible amounts as may be provided in the Supplementary Conditions or required by Laws and Regulations). The specific requirements applicable to the builder's risk insurance are set forth in the Supplementary Conditions.

Guidance Notes—Builder's Risk Insurance Requirements—The standard builder's risk requirements in this Supplementary Condition may include some items that are not applicable to the specific Project. The user should revise the requirements based on knowledge of the Project, risk management analysis, and consultation with Owner's insurance advisors and legal counsel. The requirements are intended to be used regardless of whether the Contractor purchases the builder's risk insurance (the default assumption, as stated in GC-6.04.A), or the purchase responsibility is flipped to the Owner (see SC-6.04.A immediately above).

Some coverages, such as coverage of property in temporary storage, or coverage of property in transit, are commonly subject to sublimits—specific monetary caps on the amount of coverage. Although a sublimit may be appropriate (or at least tolerable) for some risk categories, the drafter should consult with an insurance advisor and specify a minimum for each sublimit, to avoid underinsuring the risk of a loss in such a coverage category. The provisions of SC-6.04.F indicate when a coverage category is likely to be subject to a sublimit, and provide a place for specifying an acceptable minimum. See SC-6.04.F.4, 5, and 12. SC-6.04.F.13 provides a location for specifying other sublimits.

SC-6.04.F.5 requires coverage of construction materials "in transit." Specific policies may define this as being limited to domestic, overland transit, such as rail or truck transit. Because the risk of loss in transit will ultimately be borne by Contractor, a risk that is not within the scope of the specific builder's risk insurance policy (a loss during shipment from overseas, for example) could be managed separately by Contractor in its purchase agreement with the vendor.

SC-6.04 Supplement Paragraph 6.04 of the General Conditions with the following provisions:

F. Builder's Risk Requirements—The builder's risk insurance must:

1. be written on a builder's risk "all risk" policy form that at a minimum includes insurance for physical loss or damage to the Work, temporary buildings, falsework, and materials and equipment stored and in transit, and must not exclude the coverage of the following risks: fire; windstorm; hail; flood; earthquake, volcanic activity, and other earth movement; lightning; riot; civil commotion; terrorism; vehicle impact; aircraft; smoke; theft; vandalism and malicious mischief; mechanical breakdown, boiler explosion, and artificially generated electric current; collapse; explosion; debris removal; demolition occasioned by enforcement of Laws and Regulations; and water damage (other than that caused by flood).

    a. Such policy will include an exception that results in coverage for ensuing losses from physical damage or loss with respect to any defective workmanship, methods, design, or materials exclusions.

b. If insurance against mechanical breakdown, boiler explosion, and artificially generated electric current; earthquake, volcanic activity, and other earth movement; or flood, are not commercially available under builder's risk policies, by endorsement or otherwise, such insurance will be provided through other insurance policies acceptable to Owner and Contractor.

2. cover, as insured property, at least the following: (a) the Work and all materials, supplies, machinery, apparatus, equipment, fixtures, and other property of a similar nature that are to be incorporated into or used in the preparation, fabrication, construction, erection, or completion of the Work, including Owner-furnished or assigned property; (b) spare parts inventory required within the scope of the Contract; and (c) temporary works which are not intended to form part of the permanent constructed Work but which are intended to provide working access to the Site, or to the Work under construction, or which are intended to provide temporary support for the Work under construction, including scaffolding, form work, fences, shoring, falsework, and temporary structures.

3. cover expenses incurred in the repair or replacement of any insured property (including but not limited to fees and charges of contractors, construction managers, engineers, and architects).

4. extend to cover damage or loss to insured property while in temporary storage at the Site or in a storage location outside the Site (but not including property stored at the premises of a manufacturer or Supplier). If this coverage is subject to a sublimit, such sublimit will be a minimum of $**[amount]**.

5. extend to cover damage or loss to insured property while in transit. If this coverage is subject to a sublimit, such sublimit will be a minimum of $**[amount]**.

6. allow for the waiver of the insurer's subrogation rights, as set forth in this Contract.

7. allow for partial occupancy or use by Owner by endorsement, and without cancellation or lapse of coverage.

8. include performance/hot testing and start-up, if applicable.

9. be maintained in effect until the Work is complete, as set forth in Paragraph 15.06.D of the General Conditions, or until written confirmation of Owner's procurement of property insurance following Substantial Completion, whichever occurs first.

10 include as named insureds the Owner, Contractor, Subcontractors (of every tier), and any other individuals or entities required by this Contract to be insured under such builder's risk policy. For purposes of Paragraphs 6.04, 6.05, and 6.06 of the General Conditions, and this and all other corresponding Supplementary Conditions, the parties required to be insured will be referred to collectively as "insureds." In addition to Owner, Contractor, and Subcontractors of every tier, include as insureds the following:

a. **[Here list by legal name (not category, role, or classification) other persons or entities to be included on the builder's risk policy as named insureds. It is generally recommended to list the insured's full legal/contractual name, address, contact person, telephone, and e-mail address. Include only persons or entities**

that have property at the Site that is to be insured by the builder's risk insurance. If applicable, separately identify any mortgagee or lender required to be named as a loss payee.]

11. include, in addition to the Contract Price amount, the value of the following equipment and materials to be installed by the Contractor but furnished by the Owner or third parties:

    a. **[Here list or provide cross-reference to specific items of Owner-furnished (or third-party furnished) equipment, and purchase value; do not list items whose value is already included in the Contract Price.]**

12. If debris removal in connection with repair or replacement of insured property is subject to a coverage sublimit, such sublimit will be a minimum of $**[amount]**.

13. In addition to the coverage sublimits stated above, the following coverages are also subject to sublimits, as follows:

    a. **[Here list a specific coverage, or cause of loss, that has been determined to be likely to be subject to a sublimit. If not applicable, then delete Paragraph SC-6.04.F.13 in its entirety.]** If this coverage is subject to a sublimit, such sublimit will be a minimum of $**[amount]**.

Guidance Notes—Loss of Revenue and "Soft Cost" Coverage—The basic coverage of a builder's risk policy provides compensation for direct physical loss or damage to the Work. Such loss or damage often has secondary impacts associated with delays in completion of the Work. One significant secondary impact is loss of revenue. Another broad category of secondary impacts is often referred to as "soft costs"—extended financing costs, management and engineering expenses, tax and permit costs, and insurance.

It is usually possible to expand the basic builder's risk coverage to insure against loss of revenue and soft cost losses. SC-6.04.G provides a starting point for doing so. This clause should be reviewed carefully and supplemented as needed to obtain the coverage needed for the specific Project. Substantial input from Owner, working in conjunction with an insurance broker or consultant, is necessary to identify specific soft cost exposures, and to quantify the scope of possible losses. Without such input, it would be impossible for the builder's risk underwriters to assess risks and develop an appropriate premium.

For example, if soft cost coverage will extend to loss of revenue of a processing facility if it is completed late (as the result of physical damage from a covered risk, such as a fire), then it will be essential for the builder's risk insurers or brokers who price out the insurance to have a reasonable estimate of anticipated daily revenue and other financial factors. In a competitive bidding setting, and assuming that the Contractor will procure the builder's risk insurance (and include or account for the premium in the bid price), this means that such information will need to be furnished to bidders, who can then communicate it to brokers, who will furnish quotes for premiums.

As an alternative, Owner may prefer to solicit bids based on a generic requirement (such as that stated in SC-6.04.G), and then work with the selected Contractor and its insurer to refine the scope of loss of revenue and soft cost coverage and the related premiums, and issue a Change Order to document the precise coverage and any resulting change in Contract Price.

SC-6.04 Supplement Paragraph 6.04 of the General Conditions with the following provision:

G. Coverage for Completion Delays—The builder's risk policy will include, for the benefit of Owner, loss of revenue and soft cost coverage for losses arising from delays in completion that result from covered physical losses or damage. Such coverage will include, without limitation, fixed expenses and debt service for a minimum of 12 months with a maximum deductible of 30 days, compensation for loss of net revenues, rental costs, and attorneys' fees and construction management, engineering or other consultants' fees, if not otherwise covered.

Guidance Notes—Builder's Risk Deductibles—Paragraph 6.04.A of the General Conditions requires builder's risk insurance on a completed value basis, subject to such deductible amounts as are provided by the Supplementary Conditions. SC-6.04.H provides a means of identifying a primary deductible; other specific deductibles may also be added. It is common for builder's risk policies to feature several different deductibles, typically including a primary deductible and specific deductibles applicable to specific types of loss, such as flood and earth movement.

In some cases, the Owner (as the party directing or specifying the content of the insurance-related Supplementary Conditions) will choose not to specify any deductibles, leaving establishment of the deductible amounts to the discretion of the purchasing party, which is responsible for payment of the deductibles. Even when a deductible is stipulated, it is typically a maximum amount; the purchaser may choose to purchase a policy with a lower deductible.

The builder's risk policies available for projects in coastal and other high-risk areas may have special deductible provisions for wind and flood damage (hurricanes), earthquakes, and other specific risks. Such deductibles are determined based on a percentage of the property value at the time of loss, rather than being stated as a specific dollar amount. SC-6.04.H should be revised to reflect coastal or other local conditions that change the approach to deductibles.

SC-6.04 Supplement Paragraph 6.04 of the General Conditions with the following provisions:

H. Builder's Risk and Other Property Insurance Deductibles—The purchaser of any required builder's risk, installation floater, or other property insurance will be responsible for costs not covered because of the application of a policy deductible.

1. The builder's risk policy (or if applicable the installation floater) will be subject to a deductible amount of no more than $**[number]** for direct physical loss in any one occurrence.

Guidance Notes—Installation Floater—An installation floater is insurance carried by a specific contractor, covering only the materials and equipment to be incorporated in the contractor's work. It typically does not insure against losses that occur after installation. In most cases, builder's risk insurance offers broader coverage, covers the Owner, Contractor, and Subcontractors, and is the preferred risk management instrument. On some projects, an installation floater may be an acceptable alternative to a builder's risk policy. For example, on a pipeline project it may be adequate from a risk management standpoint to insure against loss or damage to the piping until installation, at which time there is little further risk from standard insurable perils such as fire or windstorm. Because the Owner will typically not be an insured,

the use of an installation floater also assumes a risk management decision that protecting the Contractor's interest in the materials and equipment is adequate to assure the best interests of the project. See EJCDC® C-001, Commentary on the 2018 EJCDC Construction Documents (2018).

If, after consultation with its risk managers, Owner elects to allow purchase of an installation floater rather than a builder's risk policy, the following SC-6.04.A should be included as a Supplementary Condition; GC-6.04.B, GC-6.04.C, GC-6.04.D, and GC-6.04.E should be retained; SC-6.04.F, Builder's Risk Requirements, should not be included; and SC-6.04.H, Builder's Risk and other Property Insurance Deductibles, should be included. Owner should determine whether soft cost and related coverage is available and warranted, and if so modify the contents of SC-6.04.G, Coverage for Completion Delays, for the installation floater requirement.

SC-6.04 Delete Paragraph 6.04.A of the General Conditions and substitute the following in its place:

A. Installation Floater

1. Contractor shall provide and maintain installation floater insurance on a broad form or "all risk" policy providing coverage for materials, supplies, machinery, fixtures, and equipment that will be incorporated into the Work ("Covered Property"). Coverage under the Contractor's installation floater will include loss from covered "all risk" causes (perils) to Covered Property:

   a. of the Contractor, and Covered Property of others that is in Contractor's care, custody, and control;

   b. while in transit to the Site, including while at temporary storage sites;

   c. while at the Site awaiting and during installation, erection, and testing;

   d. continuing at least until the installation or erection of the Covered Property is completed, and the Work into which it is incorporated is accepted by Owner.

2. The installation floater coverage cannot be contingent on an external cause or risk or limited to property for which the Contractor is legally liable.

3. The installation floater coverage will be in an amount adequate to protect Contractor's interest in the Covered Property. The Contractor will be solely responsible for any deductible carried under this coverage.

4. This policy will include a waiver of subrogation applicable to Owner, Contractor, Construction Manager, Engineer, all Subcontractors, and the officers, directors, partners, employees, agents and other consultants and subcontractors of any of them.

ARTICLE 7—CONTRACTOR'S RESPONSIBILITIES

7.03 Labor; Working Hours

Guidance Notes—Defining "Regular Hours" and "Legal Holidays"—Paragraph 7.03.C of the General Conditions restricts Contractor to working during "regular hours" Monday through Friday, and no work is

permitted on “legal holidays.” To provide details regarding the meaning of the terms “regular hours” and “legal holidays,” consider specifically defining them by adding the following:

SC-7.03 Add the following new subparagraphs immediately after Paragraph 7.03.C:

1. Regular working hours will be **[Here insert schedule of regular working hours]**.
2. Owner's legal holidays are **[Here insert list of legal holidays]**.

Guidance Notes—Days of the Week That May be Worked—To modify the days of the week that Contractor may work, use the following:

SC-7.03 Amend the first and second sentences of Paragraph 7.03.C to state “…all Work at the Site must be performed during regular working hours, **[day of the week]** through **[day of the week]**. Contractor will not perform Work on a **[day of the week]**, **[day of the week]**, or any legal holiday.”

Guidance Notes—Unlimited Work Schedule—If the Owner has no objections to the Contractor working multiple shifts, weekends, and legal holidays, use the following:

SC-7.03 Delete Paragraph 7.03.C in its entirety, and insert the following:

C. In the absence of any Laws or Regulations to the contrary, Contractor may perform the Work on holidays, during any or all hours of the day, and on any or all days of the week, at Contractor's sole discretion.

Guidance Notes—Responsibility for Overtime Costs. If Contractor is permitted to Work outside regular hours and on weekends and holidays, whether by a contractual provision or by Owner’s consent during the course of the Project, then it is good practice to address the issue of whether Owner may charge Contractor for construction management and engineering expenses associated with the non-regular schedule. Some Owners may prefer to absorb these costs to incentivize (or at least facilitate) an aggressive schedule and timely completion; and in many cases the net additional expense may be modest. Other Owners may prefer to establish and collect a charge for the construction management and engineering services. Add the following as SC-7.03.D, making a policy choice regarding responsibility in the beginning of the sentence:

SC-7.03 Add the following new paragraph immediately after Paragraph 7.03.C:

D. **[Contractor] [Owner] [choose one and delete the other]** shall be responsible for the cost of any overtime pay or other expense incurred by the Owner for construction observation and other services (by Construction Manager, Engineer, or otherwise) occasioned by the performance of Work on Saturday, Sunday, any legal holiday, or as overtime on any regular workday. If Contractor is responsible but does not pay, or if the parties are unable to agree as to the amount owed, then Owner may impose a reasonable set-off against payments due under Article 15.

Guidance Notes—Defining Overtime Costs—If responsibility for costs in SC-7.03.D will be allocated to Contractor, Owner may wish to provide some specificity regarding the potential costs, through the addition of the following:

SC-7.03 Add the following new subparagraph immediately after Paragraph SC-7.03.D:

1. For purposes of administering the foregoing requirement, additional overtime costs are defined as **[Here insert parameters for compensated overtime hours]**.

7.10 Taxes

Guidance Notes—Sales and Use Tax Exemptions—If Owner qualifies for a state or local sales or use tax exemption in the purchase of certain materials and equipment, add the following Supplementary Condition, with any revisions necessary to meet the specific applicable exemption rules.

If instructions to bidders or proposers are used, confirm that the provisions here are consistent with the corresponding provisions in such instructions. See EJCDC® CMA-200, Instructions to Bidders for Construction Contract—Construction Manager as Advisor Series (2021), Article 21.

SC-7.10 Add a new paragraph immediately after Paragraph 7.10.A:

A. Owner is exempt from payment of sales and compensating use taxes of the State of **[name of state where Project is located]** and of cities and counties thereof on all materials to be incorporated into the Work.

1. Owner will furnish the required certificates of tax exemption to Contractor for use in the purchase of supplies and materials to be incorporated into the Work.

2. Owner's exemption does not apply to construction tools, machinery, equipment, or other property purchased by or leased by Contractor, or to supplies or materials not incorporated into the Work.

7.13 Safety and Protection

Guidance Notes—Owner's Safety Programs—Some Owners have written safety programs with which construction contractors must comply. If such is the case, Paragraph 7.13.G of the General Conditions states that the safety program will be identified or included in the Supplementary Conditions or Specifications (and Paragraph 9.12.B requires Owner to provide a copy of such programs to Contractor).

If the identification of the Owner's safety programs will occur in the Supplementary Conditions, use the following SC-7.13. If there is a Specification section (typically in Division 01) that addresses the Owner's safety programs, then SC-7.13 is unnecessary, though it could be retained as a means of providing a cross-reference to the specific location in the Specifications.

SC-7.13 Insert the following after the second sentence of Paragraph 7.13.G:

The following Owner safety programs are applicable to the Work: **[Here expressly identify by title and/or date, any such Owner safety programs. If Owner's safety programs are**

included in or addressed in the Specifications, SC-7.13 may be used to provide a cross-reference to the Specification section].

ARTICLE 8—OTHER WORK AT THE SITE

8.02 Coordination

Guidance Notes—Coordinating Other Work at Site—Paragraph 8.02 of the General Conditions requires that if in addition to retaining Contractor, Owner will arrange to have others perform work at the Site, Owner must provide to Contractor specified information regarding coordination of construction activities. (Note that Owner should provide specific information about the other work—nature of the work, scope, schedule, exact location—elsewhere in the Contract Documents or in other documentation.) When applicable, add the following to provide such information:

SC-8.02 Add the following new Paragraph 8.02.C immediately after Paragraph 8.02.B:

C. Owner intends to contract with others for the performance of other work at or adjacent to the Site.

1. **[Here identify individual or entirety]** shall have authority and responsibility for coordination of the various contractors and work forces at the Site;
2. The following specific matters are to be covered by such authority and responsibility: **[Here itemize such matters]**;
3. The extent of such authority and responsibilities is: **[Here provide the extent]**.

ARTICLE 9—OWNER'S RESPONSIBILITIES

No suggested Supplementary Conditions in this Article.

ARTICLE 10—CONSTRUCTION MANAGER'S AND ENGINEER'S STATUS DURING CONSTRUCTION

No suggested Supplementary Conditions in this Article.

ARTICLE 11—CHANGES TO THE CONTRACT

No suggested Supplementary Conditions in this Article.

ARTICLE 12—CLAIMS

No suggested Supplementary Conditions in this Article.

ARTICLE 13—COST OF WORK; ALLOWANCES, UNIT PRICE WORK

13.01 Cost of the Work

Guidance Notes—Equipment Rental Costs. When Contractor's compensation is determined in whole or in part on the basis of Cost of the Work, equipment rental charges, particularly with respect to Contractor-owned equipment, can sometimes lead to disagreements. GC-13.01.B.5.c.(2) addresses Contractor owned equipment rental costs, indicating that such costs will be governed by a rental rate book specified in the Supplementary Conditions. The following Supplementary Condition is the location to specify the governing rental rate book (or equivalent resource). As of 2021, commonly used sources for equipment rental rate information include EquipmentWatch; the Rental Rate Blue Book for Construction Equipment; and the Associated Equipment Distributors Green Book: Rental Rates for Construction Equipment.

SC-13.01 Supplement Paragraph 13.01.B.5.c.(2) by adding the following sentence:

The equipment rental rate book that governs the included costs for the rental of machinery and equipment owned by Contractor (or a related entity) under the Cost of the Work provisions of this Contract is the most current edition of **[name of equipment rental rate book or equivalent resource]**.

Guidance Notes—Defining "Small Tools and Hand Tools." GC-13.01.C.2 excludes the cost of "small tools and hand tools" from Cost of the Work. Providing more definition of what that term means in a Supplementary Condition may eliminate or reduce arguments about this aspect of Cost of the Work. One common approach is to define small tools and hand tools based on a price threshold, as follows:

SC-13.01 Supplement Paragraph 13.01.C.2 by adding the following definition of small tools and hand tools:

a. For purposes of this paragraph, "small tools and hand tools" means any tool or equipment whose current price if it were purchased new at retail would be less than $500. **[or insert another threshold price.]**

13.03 Unit Price Work

Guidance Notes—Variations from Estimated Quantities, Unit Price Work. GC-13.03.E is a "variation in estimated quantities (VEQ)" clause that applies when the actual quantity of a unit price item varies "materially and significantly" from the estimated quantity. The following Supplementary Condition is a more specific and detailed VEQ clause. By providing a specific threshold for eligible categories of unit prices, and specifically defining the degree by which an actual quantity must vary from the estimated quantity, the Supplementary Condition is intended to simplify and facilitate the administrative resolution of situations where actual quantities of unit price items differ materially and significantly from estimated quantities. When such a VEQ clause is used, a common number for the first blank is 5 percent of the Contract Price (based on estimated quantities), and a common number for the second blank is typically 15, 20, or 25 percent; however, other numbers may be appropriate in both locations.

SC-13.03 Delete Paragraph 13.03.E in its entirety and insert the following in its place:

E. Adjustments in Unit Price

1. Contractor or Owner shall be entitled to an adjustment in the unit price with respect to an item of Unit Price Work if:

   a. the extended price of a particular item of Unit Price Work amounts to **[number]** percent or more of the Contract Price (based on estimated quantities at the time of Contract formation) and the variation in the quantity of that particular item of Unit Price Work actually furnished or performed by Contractor differs by more than **[number]** percent from the estimated quantity of such item indicated in the Agreement; and

   b. Contractor's unit costs to perform the item of Unit Price Work have changed materially and significantly as a result of the quantity change.

2. The adjustment in unit price will account for and be coordinated with any related changes in quantities of other items of Work, and in Contractor's costs to perform such other Work, such that the resulting overall change in Contract Price is equitable to Owner and Contractor.

3. Adjusted unit prices will apply to all units of that item.

ARTICLE 14—TESTS AND INSPECTIONS; CORRECTION, REMOVAL, OR ACCCEPTANCE OF DEFECTIVE WORK

No suggested Supplementary Conditions in this Article.

ARTICLE 15—PAYMENTS TO CONTRACTOR, SET OFFS; COMPLETIONS; CORRECTION PERIOD

15.01 Progress Payments

Guidance Notes—Coordinating Payments with Actual Progress of the Work. Paragraph GC-15.01.A states that progress payments for "cost-based Work will be based on Cost of the Work completed by Contractor during the pay period." This contractual provision generally will be sufficient to result in a fair and orderly payment process on cost-plus contracts. However, on some projects the cost-based progress payments may outpace the actual progress of the Work or may become substantially out of step with respect to the ultimate limits created by a Guaranteed Maximum Price. The following clause may be added to Paragraph 15.01 to allow Owner to require Contractor to adjust its progress payment requests to bring the payment flow back into balance.

SC-15.01 Add the following new Paragraph 15.01.F:

F. For contracts in which the Contract Price is based on the Cost of Work, if Owner determines that progress payments made to date substantially exceed the actual progress of the Work (as measured by reference to the Schedule of Values), or present a potential conflict with the Guaranteed Maximum Price, then Owner may require that Contractor prepare and submit a

plan for the remaining anticipated Applications for Payment that will bring payments and progress into closer alignment and take into account the Guaranteed Maximum Price (if any), through reductions in billings, increases in retainage, or other equitable measures. Owner will review the plan, discuss any necessary modifications, and implement the plan as modified for all remaining Applications for Payment.

Guidance Notes—Modifying the Standard Time in Which Owner Must Make Payments— Paragraph GC-15.01.D states that Owner will pay Contractor within 10 days after receipt of Construction Manager's recommendation of payment of a progress payment; GC-15.06.E requires Owner to make the final payment within 30 days of the final Application for Payment. The user should confirm that these payment deadlines are acceptable to Owner. See EJCDC® CMA-050, Bidding Procedures and Construction Contract Documents—Construction Manager as Advisor Series (2021), Paragraph 5.06. If changes are appropriate, prepare Supplementary Conditions here in Article SC-15 to modify the number of days in which payments are due.

15.03 Substantial Completion

Guidance Notes—Owner Recovery of Re-inspection Costs—Paragraph 15.03.A of the General Conditions requires Contractor to give notice that the Work is substantially complete; Paragraph 15.03.B requires an inspection of the Work to determine whether Construction Manager and Engineer agree that the Work is substantially complete. If the Work is not substantially complete, and must be inspected again at a later point, then the following Supplementary Condition, if included in the Contract, would allow Owner to recover the cost of the re-inspection.

SC-15.03 Add the following new subparagraph to Paragraph 15.03.B:

1. If some or all of the Work has been determined not to be at a point of Substantial Completion and will require re-inspection or re-testing by Construction Manager and Engineer, the cost of such re-inspection or re-testing, including the cost of time, travel and living expenses, will be paid by Contractor to Owner. If Contractor does not pay, or the parties are unable to agree as to the amount owed, then Owner may impose a reasonable set-off against payments due under this Article 15.

15.08 Correction Period

Guidance Notes—Lengthening the Correction Period—Paragraph 15.08.A of the General Conditions refers to a one-year correction period following Substantial Completion. During that one-year time period, Contractor is obligated to return to the Site to correct defective Work. If a longer correction period is to be imposed, use SC-15.08.G. Note that often the lengthening of the correction period will be tied to the use of a warranty bond. See SC-6.01.B. The extension of the correction period set forth in SC-6.01.B is confirmed in the following Supplementary Condition by reference. In that case the sentence may be terminated after "…years set forth in SC-6.01.B.1."

If the extension of the correction period is independent of a warranty bond or similar provision, then the user should accomplish the extension by filling in the number where indicated at the end SC-15.08.G.

If SC-15.08.G is not used, the correction period will retain the standard one year duration.

SC-15.08 Add the following new Paragraph 15.08.G:

G. The correction period specified as one year after the date of Substantial Completion in Paragraph 15.08.A of the General Conditions is hereby revised to be the number of years set forth in SC-6.01.B.1; or if no such revision has been made in SC-6.01.B, then the correction period is hereby specified to be **[number]** years after Substantial Completion.

ARTICLE 16—SUSPENSION OF WORK AND TERMINATION

No suggested Supplementary Conditions in this Article.

ARTICLE 17—FINAL RESOLUTIONS OF DISPUTES

17.02 Arbitration

Guidance Notes—Alternatives to Litigation as Final Dispute Resolution Method; Arbitration— Paragraph 17.01.B of the General Conditions provides that for any dispute subject to final resolution under Article 17, Owner or Contractor may invoke the dispute resolution procedure called for in the Supplementary Conditions. Paragraph SC-17.02 is the location to identify any such primary dispute resolution procedure. If no procedure is identified here in the Supplementary Conditions, and the parties do not agree to a specific procedure, then the default resolution procedure will be litigation—the pursuit of rights in a court of competent jurisdiction. Note that before reaching the point of final resolution of disputes, in most cases the Owner and Contractor will already have engaged in the Claim process described in Article 12 of the General Conditions. That process allows for mediation of the dispute.

As an alternative to litigation, there are many other possible dispute resolution procedures, or combinations of procedures. One of the most common procedures for resolving construction disputes is arbitration; wording for an arbitration clause follows. A discussion of the pros and cons of the arbitration process (and there are many advocates on both sides) is beyond the scope of this Guide. Owner should consult with its legal counsel when considering the inclusion of an arbitration clause, or of any other dispute resolution procedure or combination of procedures.

The EJCDC arbitration clause is drafted to use the rules and administration of the American Arbitration Association. The user is free to substitute the rules and services of other dispute resolution organizations, and to customize the arbitration process to suit the needs of the specific Contract.

The arbitration option is as follows:

SC-17.02 Add the following new paragraph immediately after Paragraph 17.01.

17.02 Arbitration

A. All matters subject to final resolution under this Article will be settled by arbitration administered by the American Arbitration Association in accordance with its Construction Industry Arbitration Rules (subject to the conditions and limitations of this

Paragraph SC-17.02). Any controversy or claim in the amount of $100,000 or less will be settled in accordance with the American Arbitration Association's supplemental rules for Fixed Time and Cost Construction Arbitration. This agreement to arbitrate will be specifically enforceable under the prevailing law of any court having jurisdiction.

B. The demand for arbitration will be filed in writing with the other party to the Contract and with the selected arbitration administrator, and a copy will be sent to Engineer and Construction Manager for information. The demand for arbitration will be made within the specific time required in Article 17, or if no specified time is applicable within a reasonable time after the matter in question has arisen, and in no event will any such demand be made after the date when institution of legal or equitable proceedings based on such matter in question would be barred by the applicable statute of limitations.

C. The arbitrator(s) must be licensed engineers, contractors, attorneys, or construction managers. Hearings will take place pursuant to the standard procedures of the Construction Arbitration Rules that contemplate in-person hearings. The arbitrators will have no authority to award punitive or other damages not measured by the prevailing party's actual damages, except as may be required by statute or the Contract. Any award in an arbitration initiated under this clause will be limited to monetary damages and include no injunction or direction to any party other than the direction to pay a monetary amount.

D. The Arbitrators will have the authority to allocate the costs of the arbitration process among the parties but will only have the authority to allocate attorneys' fees if a specific Law or Regulation or this Contract permits them to do so.

E. The award of the arbitrators must be accompanied by a reasoned written opinion and a concise breakdown of the award. The written opinion will cite the Contract provisions deemed applicable and relied on in making the award.

F. The parties agree that failure or refusal of a party to pay its required share of the deposits for arbitrator compensation or administrative charges will constitute a waiver by that party to present evidence or cross-examine witness. In such event, the other party shall be required to present evidence and legal argument as the arbitrator(s) may require for the making of an award. Such waiver will not allow for a default judgment against the non-paying party in the absence of evidence presented as provided for above.

G. No arbitration arising out of or relating to the Contract will include by consolidation, joinder, or in any other manner any other individual or entity (including Construction Manager, Engineer, and their consultants, and the officers, directors, partners, agents, employees or consultants of any of them) who is not a party to this Contract unless:

1. the inclusion of such other individual or entity will allow complete relief to be afforded among those who are already parties to the arbitration;

2. such other individual or entity is substantially involved in a question of law or fact which is common to those who are already parties to the arbitration, and which will arise in such proceedings;

3. such other individual or entity is subject to arbitration under a contract with either Owner or Contractor, or consents to being joined in the arbitration; and

4. the consolidation or joinder complies with the arbitration administrator's procedural rules.

H. The award will be final. Judgment may be entered upon it in any court having jurisdiction thereof, and it will not be subject to modification or appeal, subject to provisions of the Laws and Regulations relating to vacating or modifying an arbitral award.

I. Except as may be required by Laws or Regulations, neither party nor an arbitrator may disclose the existence, content, or results of any arbitration hereunder without the prior written consent of both parties, with the exception of any disclosure required by Laws and Regulations or the Contract. To the extent any disclosure is allowed pursuant to the exception, the disclosure must be strictly and narrowly limited to maintain confidentiality to the extent possible.

17.03 Attorneys' Fees

Guidance Notes—Prevailing Party Attorneys' Fees Clause—In most jurisdictions in the United States, as a general matter each party to a dispute is responsible for its own attorneys' fees, unless an express agreement provides to the contrary. Some legal authorities believe that this general rule encourages claims and disputes, because under the general rule claimants have little concern that they will be forced to pay for the opposing party's fees if the claim fails. Other authorities take the opposite view—that if a prevailing-party attorneys' fee rule is used instead of the general rule, then the enticing prospect of not only prevailing but also of having one's own fees paid by the opponent would encourage overly aggressive pursuit of claims (or overzealous defense against valid claims).

If an exception to the general United States rule is preferred for disputes subject to final resolution under Article 17, then add the following express agreement:

SC-17.03 Add the following new paragraph immediately after Paragraph 17.02. **[Note—If there is no Paragraph 17.02, because neither arbitration nor any other dispute resolution process has been specified here in the Supplementary Conditions, then revise this to state "Add the following new Paragraph immediately after Paragraph 17.01" and revise the numbering accordingly]**.

17.03 Attorneys' Fees

A. For any matter subject to final resolution under this Article, the prevailing party shall be entitled to an award of its attorneys' fees incurred in the final resolution proceedings, in an equitable amount to be determined in the discretion of the court, arbitrator, arbitration panel, or other arbiter of the matter subject to final resolution, taking into account the parties' initial demand or defense positions in comparison with the final result.

ARTICLE 18—MISCELLANEOUS

18.08 Assignment of Contract

Guidance Notes—Assignment—GC-18.08 restricts the assignment of the Contract by both Owner and Contractor. From the Contractor's perspective, it has elected to work for a specific project Owner, based on an evaluation of the Owner's ability to meet its obligations (especially payment of Contractor), and on Owner's reputation for how it administers construction contracts. From Owner's perspective, it has awarded the Contract to a specific Contractor based in part on that Contractor's eligibility to perform the work with requisite competence, safety, and schedule compliance. GC-18.08 places some limitations on the ability of either party to transfer its duties without the consent of the other party.

If the parties anticipate during the drafting process that an assignment will occur (for example, a local sewer district that knows it soon will be transferring its infrastructure projects to a metropolitan authority), then a Supplementary Condition should be drafted to confirm the anticipated assignment and establish the parties' advance consent to the assignment, thereby avoiding possible disputes about granting consent.

Another possibility is an assignment of a contract or purchase order to the Contractor. This typically happens in the context of Owner's procurement of engineered equipment; if the procurement is in progress when the Contractor is selected, it may make sense to assign the procurement contract to the Contractor. SC-18.08.B may be used to implement such an assignment, and to establish the assignment's basic terms. SC-18.08.B is intended to be coordinated with the EJCDC Procurement Series (P-Series) documents.

The form to be attached as an exhibit to the Contract (meaning the construction contract of which these Supplementary Conditions are a part), as referred to in SC-18.08.B, is the Assignment of Contract; Consent to Assignment; and Acceptance of Assignment form that is attached to EJCDC® P-520, Agreement Between Buyer and Seller (2019).

SC-18.08 Add the following new paragraph immediately after Paragraph 18.08.A:

B. The contract dated **[date]** between Owner as "buyer" and **[identify seller]** as "seller" for procurement of goods and special services ("procurement contract") **[is hereby] [will be]** assigned to Contractor by Owner, and Contractor **[accepts] [will accept]** such assignment. A form documenting the assignment is attached as an exhibit to this Contract.

1. This assignment will occur on the **[Effective Date of the Contract]** and will relieve the Owner as "buyer" from all further obligations and liabilities under the procurement contract.

2. Upon assignment, the "seller" will be a Subcontractor or Supplier of the Contractor, and Contractor will be responsible for seller's performance, acts, and omissions, as set forth in Paragraph 7.07 of the General Conditions, just as Contractor is responsible for all other Subcontractors and Suppliers.

3. Notwithstanding this assignment, all performance guarantees and warranties required by the procurement contract will continue to run for the benefit of the Owner and, in addition, for the benefit of the Contractor.
4. Except as noted in the procurement contract, all rights, duties and obligations of Construction Manager and Engineer to "buyer" and "seller" under the procurement contract will cease upon the assignment to Contractor.

EXHIBIT A—SOFTWARE REQUIREMENTS FOR ELECTRONIC DOCUMENT EXCHANGE

Guidance Notes—Exhibit A—This exhibit is used with the Electronic Documents Protocol (EDP) presented in SC-2.06. If the Project-specific Supplementary Conditions do not include SC-2.06, then do not include Exhibit A. If Exhibit A is included, modify it to conform to Project-specific requirements. For example, in some cases the required "Transmittal Means" may be a specified web-based Project Management and Information System (PMIS).

Item	Electronic Documents	Transmittal Means	Data Format	Note (1)
a.1	General communications, transmittal covers, meeting notices and responses to general information requests for which there is no specific prescribed form.	Email	Email	
a.2	Meeting agendas, meeting minutes, RFI's and responses to RFI's, and Contract forms.	Email w/ Attachment	PDF	(2)
a.3	Contractors Submittals (Shop Drawings, "or equal" requests, substitution requests, documentation accompanying Sample submittals and other submittals) to Construction Manager and Construction Manager's responses to Contractor's Submittals, Shop Drawings, correspondence, and Applications for Payment.	Email w/ Attachment	PDF	
a.4	Correspondence; milestone and final version Submittals of reports, layouts, Drawings, maps, calculations and spreadsheets, Specifications, Drawings and other Submittals from Contractor to Owner or Construction Manager and for responses from Construction Manager to Contractor regarding Submittals.	Email w/ Attachment or LFE	PDF	
a.5	Layouts and drawings to be submitted to Owner for future use and modification.	Email w/ Attachment or LFE	DWG	
a.6	Correspondence, reports and Specifications to be submitted to Owner for future word processing use and modification.	Email w/ Attachment or LFE	DOC	
a.7	Spreadsheets and data to be submitted to Owner for future data processing use and modification.	Email w/ Attachment or LFE	EXC	
a.8	Database files and data to be submitted to Owner for future data processing use and modification.	Email w/ Attachment or LFE	DB	

Notes	
(1)	All exchanges and uses of transmitted data are subject to the appropriate provisions of Contract Documents.
(2)	Transmittal of written notices is governed by Paragraph 18.01 of the General Conditions.

Key	
Email	Standard Email formats (.htm, .rtf, or .txt). Do not use stationery formatting or other features that impair legibility of content on screen or in printed copies
LFE	Agreed upon Large File Exchange method (FTP, CD, DVD, hard drive)
PDF	Portable Document Format readable by **[Bluebeam® Revu®][Adobe® Acrobat Reader] [other][version number]** or later
DWG	Autodesk® AutoCAD .dwg format Version **[number]**

Item	Electronic Documents	Transmittal Means	Data Format	Note (1)
DOC	Microsoft® Word .docx format Version **[number]**			
EXC	Microsoft® Excel .xlsx or .xml format Version **[number]**			
DB	Microsoft® Access .mdb format Version **[number]**			

EXHIBIT B—FORESEEABLE BAD WEATHER DAYS

Guidance Notes—Exhibit B—This exhibit is used with SC-4.05.C, which provides a definition of those "abnormal weather conditions" that result from excessive precipitation or extreme temperatures. If the Project-specific Supplementary Conditions do not include SC-4.05.C, then do not include Exhibit B. If Exhibit B is included, fill in the information in the table to establish the Project-specific number of foreseeable Bad Weather Days with respect to precipitation and temperature.

Month	Number of Foreseeable Bad Weather Days in Month Based on Precipitation as Rain Equivalent (inches) (1)	Ambient Outdoor Air Temperature (degrees F)	
		Number of Foreseeable Bad Weather Days in Month Based on Low Temperature (at 11:00 a.m.)	Number of Foreseeable Bad Weather Days in Month Based on High Temperature (at 3:00 p.m.)
January			
February			
March			
April			
May			
June			
July			
August			
September			
October			
November			
December			

Notes:
1. Two inches of sleet equal one inch of rain. Five inches of wet, heavy snow equal one inch of rain. Fifteen inches of "dry" powder snow equals one inch of rain.

EXHIBIT C—GEOTECHNICAL BASELINE REPORT SUPPLEMENT TO THE SUPPLEMENTARY CONDITIONS

Guidance Notes—Geotechnical Baseline Reports—This supplement presents optional Supplementary Conditions that are used if Owner elects to issue a Geotechnical Baseline Report (GBR) for a specific Project. Do not include this supplement with a project's Supplementary Conditions unless the GBR system is used.

Some project owners use a Geotechnical Baseline Report (GBR) for projects (or portions of a project) in which the subsurface conditions will play a significant role. Providing a GBR may result in bids with lower contingencies for subsurface conditions and simplify the application of the differing site conditions provisions in Article 5 of the General Conditions. Commentary on Geotechnical Baseline Reports is presented in C-001. See also Geotechnical Baseline Reports for Construction—Suggested Guidelines, by Randall J. Essex, P.E., ASCE 2007. In many cases it may be advantageous for Owner, Engineer, or the geotechnical engineer to engage a consultant with GBR experience to assist in preparation of the GBR and related documents.

On projects in which a Geotechnical Baseline Report is used, it is typical to also assemble and provide a Geotechnical Data Report (GDR), as a separate, single source of factual geotechnical information regarding the Site. The content of the GDR is what the EJCDC documents define as "Technical Data"—reliable factual information, such as boring logs and laboratory test results. (See the definition of Technical Data in Article 1 of the General Conditions, and the definition of a GDR in Article 1 of these Supplementary Conditions). Some Owners may elect to issue a GBR without compiling a GDR, but regardless of the format it is essential to identify and make all geotechnical data available. Note that a typical general-purpose geotechnical report, usually prepared primarily to assist in the design of the project, often contains not only factual data but also opinions, interpretations, and even speculation regarding the Site's subsurface conditions. Such a geotechnical report is not suitable to be adopted or identified as a GDR.

Although it is preferable that a GBR be comprehensive with respect to subsurface conditions, in some cases a GBR will establish baselines for a portion of a project but will not address all subsurface issues. For example, the GBR may establish baseline subsurface conditions along the route of a pipeline but be silent with respect to conditions underlying an associated pump building. Also, in some cases a project will involve both subsurface construction as well as building modifications or other tasks unrelated to geotechnical investigations, analysis, or interpretations. The SC/GBR provisions that follow retain certain differing site condition provisions of the General Conditions, in part because these may be needed for situations that are outside the scope of the GBR. As noted previously, these SC/GBR provisions contain locations for (1) identifying known reports and drawings regarding the subsurface conditions (a mandatory obligation), and (2) identifying Technical Data upon whose accuracy Contractor may rely (necessary in some but not all GBR projects, depending on the scope of the GBR and GDR documents).

If a GBR is used, it remains important to disclose known reports and tests regarding subsurface conditions; a place for doing so is provided in SC/GBR 5.03. If some Site conditions are outside the scope of the Geotechnical Baseline Report it will continue to be necessary to identify reliable Technical Data contained in such reports and drawings; however, if the Geotechnical Baseline Report or a related Geotechnical Data Report already establish the data that is worthy of reliance, it will not be necessary to make a redundant identification in SC/GBR 5.03.

If a GBR is used, then include the following GBR Supplementary Conditions, and do not use the Paragraph SC-5.03 in the main body of C-800:

1.01 Definitions

SC-1.01 Add to the list of definitions in Paragraph 1.01.A by inserting the following as numbered items in their proper alphabetical positions:

1. Geotechnical Baseline Report (GBR)—The interpretive report prepared by or for Owner regarding subsurface conditions at the Site, and containing specific baseline geotechnical conditions that may be anticipated or relied upon for bidding and contract administration purposes, subject to the controlling provisions of the Contract, including the GBR's own terms. The GBR is a Contract Document.

2. Geotechnical Data Report (GDR)—The factual report that collects and presents data regarding actual subsurface conditions at or adjacent to the Site, including Technical Data and other geotechnical data, prepared by or for Owner in support of the Geotechnical Baseline Report. The GDR's content may include logs of borings, trenches, and other site investigations, recorded measurements of subsurface water levels, the results of field and laboratory testing, and descriptions of the investigative and testing programs. The GDR does not include an interpretation of the data. If opinions, or interpretive or speculative non-factual comments or statements appear in a document that is labeled a GDR, such opinions, comments, or statements are not operative parts of the GDR and do not have contractual standing. Subject to that exception, the GDR is a Contract Document.

5.03 Subsurface and Physical Conditions

SC-5.03 Delete Paragraph 5.03 in its entirety and replace with the following:

5.03 Subsurface and Physical Conditions

A. Reports and Drawings—The Supplementary Conditions hereby identify:

1. those reports of explorations and tests of subsurface conditions at or adjacent to the Site (other than any Geotechnical Data Report or Geotechnical Baseline Report) that contain Technical Data. Such reports are as follows:

a. Report Title: **[Exact title of the document]**

b. Date of Report: **[Date report was issued]**

c. Technical Data in report upon which Contractor may rely: **[Identify Technical Data (for example, "Boring Log, Test Site 3") and specify page number or other reference where Technical Data is located within the report. List multiple Technical Data line items per entry when appropriate.]**

2. those drawings of existing physical conditions at or adjacent to the Site, including those drawings depicting existing surface or subsurface structures at or adjacent to the Site (except Underground Facilities), that contain Technical Data. Such drawings are as follows:

a. Drawings Title: **[Exact title of the drawings]**

b. Date of Drawings: **[Date drawings were issued]**

c. Technical Data in drawings upon which Contractor may rely: **[Identify Technical Data (for example, "Plan View of Rock Outcroppings") in drawings, or state "All information in drawing" if entire content is Technical Data entitled to reliance; and specify drawing number, page number, or other reference where the Technical Data is located. List multiple Technical Data line items per entry when appropriate.]**

3. Contractor may examine copies of reports and drawings identified immediately above that were not included with the Bidding Documents at **[location]** during regular business hours or may request copies from Construction Manager, at the cost of reproduction.

B. Underground Facilities—Underground Facilities are shown or indicated on the Drawings, pursuant to Paragraph 5.05, and not in the drawings referred to in Paragraph SC-5.03.A. Information and data regarding the presence or location of Underground Facilities are not intended to be categorized, identified, or defined as Technical Data.

C. Reliance by Contractor on Technical Data Authorized—Contractor may rely upon the accuracy of the Technical Data expressly identified in the Supplementary Conditions with respect to such reports and drawings, but such reports and drawings are not Contract Documents. If no such express identification has been made, then Contractor may rely upon the accuracy of the Technical Data as defined in Paragraph 1.01.A.46.b.

D. Limitations of Other Data and Documents—Except for such reliance on Technical Data, Contractor may not rely upon or make any claim against Owner, Construction Manager or Engineer, or any of their officers, directors, members, partners, employees, agents, consultants, or subcontractors, with respect to:

1. the completeness of such reports and drawings for Contractor's purposes, including, but not limited to, any aspects of the means, methods, techniques, sequences, and procedures of construction to be employed by Contractor, and safety precautions and programs incident thereto; or

2. other data, interpretations, opinions, and information contained in such reports or shown or indicated in such drawings; or

3. the contents of other Site-related documents made available to Contractor, such as record drawings from other projects at or adjacent to the Site, or Owner's archival documents concerning the Site; or

4. any Contractor interpretation of or conclusion drawn from any Technical Data or any such other data, interpretations, opinions, or information.

E. Geotechnical Baseline Report

1. This Contract contains a Geotechnical Baseline Report ("GBR"), identified as follows: **[Example: Geotechnical Baseline Report for Northwest Interceptor, dated February 12, 2013, prepared by ABC Geotechnical Engineers, Inc., Sacramento, California]**. This Contract also contains a Geotechnical Data Report (GDR), identified as follows:

[Example: Geotechnical Data Report for Northwest Interceptor, dated June 15, 2012, prepared by ABC Geotechnical Engineers, Inc., Sacramento, California].

2. The GBR and GDR are incorporated as Contract Documents. The GBR and GDR are to be used in conjunction with other Contract Documents, including the Drawings and Specifications. If there is a conflict between the terms of the GBR and the GDR, the GBR's terms prevail.

3. The GBR describes certain select subsurface conditions that are anticipated to be encountered by Contractor during construction in specified locations (referred to here in the Supplementary Conditions as "Baseline Conditions"). These may include ground, geological, groundwater, and other subsurface geotechnical conditions, and baselines of anticipated Underground Facilities or subsurface structures.

4. The Baseline Conditions will be used to assist in the administration of the Contract's differing site conditions clause at locations where subsurface conditions have been baselined. If a condition is baselined in the GBR, then only the pertinent Baseline Conditions will be used to determine whether there is a differing site condition; and no other indication of that condition in the Contract Documents or Technical Data, or of a condition that describes, quantifies, or measures a similar characteristic of the subsurface, will be used for the differing site condition determination.

5. The Baseline Conditions will not be used to make differing site conditions determinations at locations that have not been baselined in the GBR, or at any location with respect to subsurface conditions that the Baseline Conditions do not address. If Underground Facilities or Hazardous Environmental Conditions are expressly addressed in the Baseline Conditions, then comparison to such Baseline Conditions will be the primary means of determining (a) whether an Underground Facility was shown or indicated with reasonable accuracy, as provided in Paragraph 5.05 of the General Conditions, or (b) whether a Hazardous Environmental Condition was shown or indicated in the Contract Documents as indicated in Paragraph 5.06.H of the General Conditions. As indicated in Paragraph SC-5.04 below, the GDR will be the primary resource for differing site conditions determinations in cases in which the GBR is inapplicable.

6. The descriptions of subsurface conditions provided in the GBR are based on geotechnical investigations, laboratory tests, interpretation, interpolation, extrapolation, and analyses. Neither Owner, Construction Manager, Engineer, nor any geotechnical or other consultant warrants or guarantees that actual subsurface conditions will be as described in the GBR, nor is the GBR intended to warrant or guarantee the use of specific means or methods of construction.

7. The behavior of the ground during construction depends substantially upon the Contractor's selected means, methods, techniques, sequences, and procedures of construction. If ground behavior conditions are baselined in the GBR, they are based on stated assumptions regarding construction means and methods.

8. The GBR will not reduce or relieve Contractor of its responsibility for the planning, selection, and implementation of safety precautions and programs incident to

Contractor's means, methods, techniques, sequences, and procedures of construction, or to the Work.

5.04 Differing Subsurface or Physical Conditions

SC-5.04 Delete Paragraph 5.04 in its entirety and replace with the following:

5.04 Differing Subsurface or Physical Conditions

A. Notice—If Contractor believes that any subsurface condition that is uncovered or revealed at the Site:

1. differs materially from conditions shown or indicated in the GBR; or

2. differs materially from conditions shown or indicated in the GDR, to the extent the GBR is inapplicable; or

3. differs materially from conditions shown or indicated in Contract Documents other than the GBR or GDR, to the extent the GBR and GDR are inapplicable; or

4. to the extent the GBR and GDR are inapplicable, is of such a nature as to establish that any Technical Data on which Contractor is entitled to rely as provided in Paragraph 5.03 is materially inaccurate; or

5. to the extent the GBR and GDR are inapplicable, is of such a nature as to require a change in the Drawings or Specifications; or

6. to the extent the GBR and GDR are inapplicable, is of an unusual nature, and differs materially from conditions ordinarily encountered and generally recognized as inherent in work of the character provided for in the Contract Documents;

then Contractor shall, promptly after becoming aware thereof and before further disturbing the subsurface conditions or performing any Work in connection therewith (except in an emergency as required by Paragraph 7.15), notify Owner and Construction Manager in writing about such condition. Contractor shall not further disturb such condition or perform any Work in connection therewith (except with respect to an emergency) until receipt of a written statement permitting Contractor to do so.

B. Construction Manager's Review—After receipt of written notice as required by the preceding paragraph, Construction Manager, in consultation with the Engineer, will promptly review the subsurface or physical condition in question; determine the necessity of Owner's obtaining additional exploration or tests with respect to the condition; conclude whether the condition falls within any one or more of the differing site condition categories in Paragraph SC-5.04.A above; obtain any pertinent cost or schedule information from Contractor; prepare recommendations to Owner regarding the Contractor's resumption or continuation of Work in connection with the subsurface or physical condition in question and the need for any change in the Drawings or Specifications; and advise Owner in writing of Construction Manager's findings, conclusions, and recommendations.

C. Owner's Statement to Contractor Regarding Site Condition—After receipt of Owner's response and instructions regarding the Construction Manager's written findings, conclusions, and recommendations, Construction Manager will issue a written statement to

Contractor regarding the subsurface or physical condition in question, addressing the resumption or continuation of Work in connection with such condition, indicating whether any change in the Drawings or Specifications will be made, and informing Contractor of Construction Manager's written findings, conclusions, and recommendations, as revised based on Owner's response and instructions.

D. Early Resumption of Work—If at any time Construction Manager, in consultation with the Engineer, determines that Work in connection with the subsurface or physical condition in question may resume prior to completion of Construction Manager's review or Construction Manager's issuance of its statement to Contractor, because the condition in question has been adequately documented, and analyzed on a preliminary basis, then the Construction Manager may instruct Contractor to resume such Work.

E. Possible Price and Times Adjustments

1. Contractor shall be entitled to an equitable adjustment in Contract Price or Contract Times, to the extent that the existence of a differing subsurface or physical condition, or any related delay, disruption, or interference, causes an increase or decrease in Contractor's cost of, or time required for, performance of the Work; subject, however, to the following:

    a. such condition must fall within any one or more of the categories described in Paragraph SC-5.04.A;

    b. with respect to Work that is paid for on a unit price basis, any adjustment in Contract Price will be subject to the provisions of Paragraph 13.03 of the General Conditions; and

    c. Contractor's entitlement to an adjustment of the Contract Times is subject to the provisions of Paragraphs 4.05.D and 4.05.E.

2. Contractor shall not be entitled to any adjustment in the Contract Price or Contract Times with respect to a subsurface or physical condition if:

    a. Contractor knew of the existence of such condition at the time Contractor made a commitment to Owner with respect to Contract Price and Contract Times by the submission of a Bid or becoming bound under a negotiated contract, or otherwise; or

    b. the existence of such condition reasonably could have been discovered or revealed as a result of any examination, investigation, exploration, test, or study of the Site and contiguous areas expressly required by the Bidding Requirements or Contract Documents to be conducted by or for Contractor prior to Contractor's making such commitment; or

    c. Contractor failed to give the written notice as required by Paragraph SC-5.04.A.

3. If Owner and Contractor agree regarding Contractor's entitlement to and the amount or extent of any adjustment in the Contract Price or Contract Times, then any such adjustment must be set forth in a Change Order.

4. Contractor may submit a Change Proposal regarding its entitlement to or the amount or extent of any adjustment in the Contract Price or Contract Times, no later than 30 days after Owner's issuance of the Owner's written statement to Contractor regarding the subsurface or physical condition in question.

F. Underground Facilities; Hazardous Environmental Conditions—Paragraph 5.05 of the General Conditions governs rights and responsibilities regarding the presence or location of Underground Facilities. Paragraph 5.06 of the General Conditions governs rights and responsibilities regarding Hazardous Environmental Conditions. The provisions of Paragraphs SC-5.03 and SC-5.04 are not applicable to the presence or location of Underground Facilities, or to Hazardous Environmental Conditions.

SECTION 01010

SUMMARY OF THE WORK

PART 1 - GENERAL

1.1 DESCRIPTION

A. Work included: The work of this Contract is located in the Town of Rochester, Massachusetts, along Cranberry Highway (Route 28) and Route 58, and County Road and includes work with the State Highway Layout subject to all conditions of the MassDOT permit as provided in the Appendix to these specifications. Additional work is located with the layout of County Road, a Town roadway, subject to all requirements of the Town of Rochester for work within a Town roadway.

B. The work shall also include, but not necessarily be limited to, providing all labor, materials, equipment and incidentals required to provide the following: furnishing and installing all materials necessary for construction of water infrastructure, sidewalks, drainage utilities, and roadway improvements, curbing, Wareham Fire District connection fees, police details, temporary police details and traffic control measures to perform said work as outlined in the contract documents. These specifications and the Contract Drawings are intended to outline all work intended. Contractor shall provide any questions during the bidding process to identify and scope not specifically defined that should be considered. Change Order requests shall be considered if the base scope changes and for reasonable unforeseen conditions during the course of construction. Unverified assumptions shall not be cause for Contract Change Orders.

C. THIS CONTRACT CONSISTS OF A BASE BID AND ADD ALTERNATE. THE CONTRACTOR MUST BE PREPARED TO UNDERTAKE ALL OF THE WORK (IF SELECTED BY THE OWNER) DESCRIBED HEREIN:

BASE CONTRACT:

CONTRACTOR TO DEMO, FURNISH, INSTALL, AND CONSTRUCT ALL ITEMS AS SHOWN ON THE CONSTRUCTION DRAWINGS DATED 01-30-2024 PREPARED BY ALLEN & MAJOR ASSOCIATES, INC. FOR THE TOWN OF ROCHESTER.

ADDITIVE ALTERNATE

INSTALL 12” X 12” DI TEE (2), 12” DI WATER MAIN, 12” GATE VALVE, 12” DI CAP, 12” X 6” DUCTILE IRON REDUCER, 6” DI WATER MAIN, 6” GATE VALVE AND 6” X 6” TAPPING SLEEVE AS SHOWN ON THE CONSTRUCTION DRAWINGS INCLUSIVE OF NECESSARY ROADWAY REPAIRS IN CONCURRENCE WITH MASSDOT APPROVALS.

END OF SECTION

SECTION 01024

MEASUREMENT AND PAYMENT

1.0 GENERAL

1.1 SUMMARY

A. The measurement and payment for Work under this Contract shall be in accordance with the 'Commonwealth of Massachusetts Department of Transportation Standard Specifications – for Highways and Bridges 2023 Editions' unless otherwise superseded by these Contract Documents.

B. Under the price specified to be paid for each item, the Contractor shall furnish all materials and equipment, furnish all labor and plant and perform all operations to complete all work as indicated and specified. Provide all supervision, overhead items, bond and permit costs, protection and precautions and all other costs, incidental to the construction work, complete, and as specified, are also included.

C. A complete, finished, working job, as intended by the general nature of these specifications, shall be produced whether or not any particular wording or direction is omitted or inadvertently not clearly stated.

D. Measurement for payment shall be by the Engineer, except where noted elsewhere in this specification. Measurement for payment for lump sum items shall be on the basis of percentage of work complete and in place.

E. Each unit or lump sum price stated in the bid shall constitute full compensation as herein specified for each item of work completed in accordance with the drawings and specifications.

F. The prices for those items which involve excavation shall include compensation for disposal of surplus excavated material, dewatering, treatment, and disposal of groundwater, and any required shoring or bracing for compliance with applicable regulations.

G. The prices for all pipe items shall constitute full compensation for furnishing, laying, jointing, cleaning, flushing, chlorinating and testing of pipe (pressure testing of sewer mains, vacuum testing of sewer structures); excavation and backfill; and clean up.

H. In all items involving excavation, the price shall be based on doing the entire excavation in earth. Where rock is excavated, the price thereof shall be in addition

to the cost of excavating earth, and no deduction will be made in the amount for earth excavation.

I. Unit prices submitted for various items of work will be utilized for determining prices of any additional work necessary during construction.

J. Final payment shall not be issued until the Contractor submits project as-builts approved by the Engineer.

K. In accordance with Chapter 150 of the Acts of 2013 (An Act Relative to Price Adjustments for Certain Materials in Construction Projects), specifically Section 38A, of Massachusetts General Laws Chapter 30, the following materials will be eligible for price adjustments in accordance with the Appendices and applicable specifications: fuel (both diesel and gasoline); liquid asphalt; and portland cement (contained in cast-in-place concrete).

1.2 ITEM DESCRIPTIONS – BASE BID AND BID ALTERNATES

A. Item 1: Clearing and Grubbing
1. The measurement and payment for this item shall be on a per acreage basis as measured and approved by the Engineer.

B. Item 3: Old Pavement Excavation
1. The measurement and payment for this item shall be on a per square yard basis as measured and approved by the Engineer.

C. Item 7: Ordinary Borrow
1. The measurement and payment for this item shall be on a per cubic yard basis as measured and approved by the Engineer. No Payment shall be made under this item for the loading, hauling, dumping, backfilling, and compacting of any existing onsite material. The Contractor shall be responsible for all testing fees and Work associated with verify that the material to be used conforms to the relevant material specification required.

D. Item 10: Fine Grading and Compacting – Subgrade Area
1. The measurement and payment for this item shall be on a per square yard basis as measured and approved by the Engineer.

E. Items 16-19: Water Pipe
1. The Contractor shall install Ductile Iron water main as specification section 331113 in accordance with Wareham Fire District Specifications within the Appendix.

F. Item 27: Ductile Iron Fittings for Water Pipe

1. The measurement and payment for this item shall be on a Lump Sum basis as measured and approved by the Engineer.

G. Item 25: Calcium Chloride for Roadway Dust Control
1. The measurement and payment for this item shall be on a Lump Sum basis as measured and approved by the Engineer.

H. Item 26: Water for Roadway Dust Control
1. The measurement and payment for this item shall be on a Lump Sum basis as measured and approved by the Engineer.

I. Item 29: Asphalt Emulsion for Tack Coat
1. The measurement and payment for this item shall be on a Lump Sum basis as measured and approved by the Engineer.

J. Item 39: Loam (4" thick)
1. The measurement and payment for this item shall be on a per cubic yard basis as measured and approved by the Engineer.

K. Item 40: Seeding
1. The measurement and payment for this item shall be on a per cubic yard basis as measured and approved by the Engineer.

L. Item 42: Traffic Cones for Traffic Management
1. The measurement and payment for this item shall be on a per day basis as measured and approved by the Engineer.

M. Item 43: Safety Signing for Traffic Management
1. The measurement and payment for this item shall be on a per square foot basis as measured and approved by the Engineer.

N. Item 44: 6 Inch Reflectorized White Line (Painted)
1. The measurement and payment for this item shall be on a per foot basis as measured and approved by the Engineer.

O. Item 45: 12 Inch Reflectorized White Line Painted
1. The measurement and payment for this item shall be on a per foot basis as measured and approved by the Engineer.

P. Item 46: Pavement Arrow and Legends
1. The measurement and payment for this item shall be on a per square foot basis as measured and approved by the Engineer.

Q. Item 48 Miscellaneous
1. Item 48 shall provide a lump sum for all general construction services, labor, materials, supplies, consumables, safety/police details, connection fees, and

equipment necessary to complete all work identified on the drawings which is not already identified in the items above. This may include, but is not limited to:

1. Incidentals necessary for a Traffic Management Plan to complete the required construction utilizing MUTCD, ADA, and MassDOT standards as directed by the Owner or Engineer including all areas directly or indirectly influenced by construction within the limits of work or outside the limits of work. The work further includes obtaining permits, coordination with the Town of Rochester Department of Public Works, Police and Fire Departments, Wareham Fire District, coordination with private property owners; distributing advance written notice to abutters, preparing, submitting, revising, implementing and reviewing traffic management plans and control plans; furnishing, installing, and maintaining traffic devices based on approved traffic management plans including concrete barriers, barricades, fencing, reflectorized drums, lane delineators, speed bumps, arrows, temporary impact attenuators, and temporary signs; temporary pavement markings; including lane, shoulder, crosswalk and stop lines; removal of temporary lines, furnishing, pinning and removal of steel roadway plates; ordering and coordinating police details daily; obtaining, posting and maintaining "No Parking" signs; all incidental work, whether listed here or not, required to provide maintenance and protection of traffic and pedestrians not covered under other items included in this Contract.
2. Sweeping and cleaning of surfaces beyond the limits of the project site required to clean up the material caused by spillage or vehicular tracking during the various phases of the work shall be considered as incidental to the work being performed under the Contract and there will be no additional compensation. Sweeping and cleaning shall be done daily.
3. Measurement for payment under this item shall be a percent of the lump sum bid calculated by dividing the elapsed time to date by the original contractual construction time limit or as approved by the Owner and/or Engineer.
4. Field engineering including site layout and control, the establishment of vertical and horizontal site control, construction line and grade, and layout.
5. Attending the pre-construction conferences and all required job progress and meetings, and coordination of all construction activities with the appropriate local authorities and utilities. Obtaining necessary permits and licenses, and payment of associated fees, if any.
6. Submission of all schedules, lists, laboratory test results, materials and sources, survey documentation, and shop drawings, as required, in a timely manner to the Engineer for review and approval.
7. Maintenance and repair of all work for a one (1) year period.
8. Providing and implementing a site specific health and safety plan for the Contractor's employees in accordance with the minimum standards set forth in OSHA 29 CFR 1910.120 and 29 CFR 1926.

9. Erosion control measures to prevent exposed fill, excavated material, or other materials form washing away of otherwise eroding from slopes or into wetlands.
10. Temporary facilities and providing required bonds and insurance.
11. Construction Photographs.
12. Field verification of all existing utilities.
13. Providing material testing, laboratory analysis of materials, and quality assurance testing for earthwork activities.
14. Coordination of other ongoing Contracts for the Town of Rochester.
15. Contract closeout and all other project related direct and direct costs not described above.

2.0 – PRODUCTS (NOT USED)

3.0 – EXECUTION (NOT USED)

END OF SECTION

SECTION 02 40 00

DEMOLITION

1.0 GENERAL

1.1 SCOPE

This work shall include the demolition of pavements, pads, walks, curbs, utility poles and fixtures, underground utilities, foundations, below grade structures, footings, catch basins and drainage structures, and removal of materials (including, but not limited to, grassed, gravel, and dirt areas) from the Site. Work shall also include sub-grade backfilling of voids created as a result of underground structure removals or demolition.

1.2 REFERENCES

The publications listed below are related sections and are to be referenced as part of this specification to the extent referenced. The publications are referred to in the text by the basic designation only.

Building Demolition Specifications

AMERICAN NATIONAL STANDARDS INSTITUTE (ANSI)

ANSI A10.6 (1990) Demolition Operations

AIR-CONDITIONING AND REFRIGERATION INSTITUTE (ARI)

ARI Guideline K (1997) Containers for Recovered Fluorocarbon Refrigerants

CODE OF FEDERAL REGULATIONS (CFR)

40 CFR 61-SUBPART M National Emission Standard for Asbestos

40 CFR 82 Protection of Stratospheric Ozone; Refrigerant Recycling

49 CFR 173.301 Shipments of Compressed Gas Cylinders

COMMONWEALTH OF MASSACHUSETTS STATE BUILDING CODE

Section 116.0 Demolition

1.3 EXISTING CONDITIONS

Structural and Site conditions shall be verified by the Contractor prior to proceeding with demolition work. Field verify the accuracy of the Specifications for miscellaneous details and inspect structures and utilities prior to the start of work and notify the Engineer, in writing, of any hazardous conditions and/or discrepancies.

1.4 GENERAL REQUIREMENTS

Perform all work in accordance with ANSI A10.6, applicable construction safety and health regulations, federal and local rules and regulations. Do not begin demolition until authorization is received from the Engineer. Remove rubbish and debris from the project site daily; do not allow accumulation inside or outside of the garage. Store materials that cannot be removed daily in areas specified by the Engineer. The removal of materials containing asbestos, PCB's, Mercury and other hazardous materials (if any) shall be coordinated with a licensed site professional.

1.5 DEFINITIONS

A. CLASS I AND CLASS II OZONE DEPLETING SUBSTANCE (ODS)

1. Class I and Class II ODS is defined in Section, 602(a) and (b), of The Clean Air Act.

B. DEMOLITION

1. Demolition shall be defined as the removal and disposal of existing fencing, retaining walls, foundations, concrete slabs and footings, asphalt paving, electrical features, and associated appurtenances to the limits described in these specifications and as directed by the Owner or Engineer.

1.6 SUBMITTALS

Submit the following to the Owner prior to the commencement of any work.

Certificates

Demolition plan:

Submit proposed demolition plan that includes detailed schedule and phasing for all demolition.

Notification of Demolition forms:

Submit copies of all notification forms to the Engineer one week prior to the start of demolition activities. These shall include all federal, state and local notifications as required.

Disposal/Recycling Facility Information:

Submit the proposed disposal/recycling facility information for each waste stream anticipated for removal from the site within the bid submittal. Each bidder is required with their bid to provide the name, address, phone number and contact person to each facility that a waste stream is anticipated to be delivered from the site. An alternate location for each waste stream is allowable and the information for the facility should also be provided with the bid.

Submit the following to the Engineer at the completion of the work.

Closeout Submittals

Receipts:

Submit a shipping receipt or bills of lading for all waste materials removed from the Site. This shall include all materials shipped off site for salvage and recycling purposes.

1.7 REGULATORY AND SAFETY REQUIREMENTS

Comply with federal, state, and local hauling and disposal regulations. In addition to the requirements of the "Contract Clauses," safety requirements shall conform to ANSI A10.6.

A. NOTIFICATIONS

1. Furnish timely notification of demolition projects to Federal, State, regional, and local authorities in accordance with 40 CFR 61-SUBPART M. Notify the Town of Ashland Department of Health and the Engineer in writing 10 working days prior to the commencement of work in accordance with 40 CFR 61-SUBPART M.
2. Complete and submit Notification of Demolition and Renovation forms to Federal and State authorities and Engineer, postmarked or delivered at least ten working days prior to commencement of work, in accordance with 40 CFR 61-SUBPART M.

3. Notify affected utility companies before starting work and comply with their requirements. Notify Dig Safe by telephone. Please be advised that notification to other utility companies may be required if they are not a subscriber to Dig Safe.

1.8 CLEARING AND GRUBBING

A. DESCRIPTION OF WORK

1. The scope of work under this Section includes the furnishing of all labor, materials, equipment and appurtenances; and performing all operations required for clearing and grubbing the site. Work will include, but not be limited to:

    a. Stripping of existing surficial vegetation and organic soils.
    b. Removal of all surficial vegetation including trees, brush, dead wood, and other surficial vegetation.
    c. Removal of roots and stumps to a minimum depth of 24 inches below the ground surface or diameters of less than 3 inches, whichever comes first.
    d. Removal of existing structures, concrete and asphalt.

2. Related work specified elsewhere includes, but is not limited to:

    a. Section 31 20 00 - Earthwork

3. Provide adequate pumping and drainage to keep all excavations and work sufficiently dry from groundwater and/or surface runoff so as not to adversely affect construction product nor cause excessive disturbance of underlying ground. Water shall be disposed in such a manner as will not cause injury to public health, or damage to public or private property, existing work or work in progress. The Contractor shall comply with all applicable environmental protection and/or sediment/erosion/dust control regulations.

4. The Contractor shall take all necessary measures to minimize dust from rising and blowing across the site. The Contractor shall control all dust created by construction operations and movement of construction vehicles, both on site and on paved ways.

1.82 QUALITY ASSURANCE

A. Codes and Standards: Comply with all rules, regulations, laws and ordinances of the Commonwealth of Massachusetts, the Town of Rochester, and of all other governing authorities having jurisdiction.

B. Neither the presence of the Engineer nor any observations and testing performed by him shall excuse the Contractor from defects discovered in his work.

1.83 JOB CONDITIONS

A. Site Information

1. Information in the Specifications relating to subsurface conditions, existing utilities and structures is from existing available documents. Such information is furnished only for the information and convenience of the Subcontractor and the accuracy and completeness of this information is not guaranteed. It is expressly understood that the Engineer will not be responsible for interpretations or conclusions drawn by the Contractor.
2. Specifications under which the work is to be performed are believed to be correct, but the Contractor shall have examined them for himself during the bidding period, as no additional compensation will be made for errors and inaccuracies that may be found therein. By submitting a bid, the Contractor affirms that has carefully examined the Site, all available information pertinent thereto, and all conditions affecting work under this Section.

B. Protection of Persons and Property

1. The work shall be executed in such a manner as to prevent any damage to adjacent property and any other property and existing improvements.
2. In the case of any damage or injury caused in the performance of work, the Subcontractor shall, at his own expense, make good such damage or injury to the satisfaction of, and without cost to the Owner.
3. Barricade any open excavations occurring as part of this work and post with warning lights. Operate warning lights during hours from dusk to dawn each day and otherwise as required.

C. Sanitary Facility

1. Contractor shall provide a portable chemical toilet service adequate for the number of workers anticipated. Facilities shall be maintained weekly.

1.9 DUST AND DEBRIS CONTROL

Prevent the spread of dust and debris to the surrounding areas and avoid the creation of a nuisance or hazard in the surrounding areas. Do not use water if it results in hazardous or objectionable conditions such as, but not limited to, ice, flooding, or pollution. Clean up dust and debris in the work area daily. Sweep pavements as often as necessary to control the spread of debris.

A. Control the potential emissions of odorous materials to minimize odors during the transport of material between areas on the Site and off site.

B. Dust control procedures shall be performed to meet all applicable federal, state and local requirements.

1.10 PROTECTION

A. TRAFFIC CONTROL SIGNS

Where pedestrian and driver safety is endangered in the area of removal work, use traffic barricades with flashing lights. Notify the Engineer prior to beginning such work.

B. SECURITY FENCING

Contractor may use chain-link fence and gates as necessary to control the work zone but fencing of the entirety of the project is not required. Padlocks shall be furnished for each gate and shall be weather resistant commercial grade and include six keys each. Each key shall be capable of opening all padlocks.

1.11 BURNING

Burning will not be permitted. Hot work is allowed by permit only obtained from local fire officials. Contractor is required to obtain all permits for hot work and to be in conformance with the permit at all times. Engineer is to receive copies of all hot work permits two days prior to conducting any hot work on site.

1.12 REQUIRED DATA

Demolition plan shall include procedures for careful removal and disposition of materials specified to be salvaged, coordination with other work in progress, a disconnection schedule of utility services, a detailed description of methods and equipment to be used for each operation and of the sequence of operations. Include description of dust control procedures to be used during the demolition, handling and transport phases of the work. Include description of sedimentation and erosion control measures to be used to protect adjacent properties and roadways from erosion and/or siltation damage during this work. No work will be allowed to commence until all required sedimentation and erosion control measures are installed to the satisfaction of the Site Engineer. Construction of erosion control measures along the perimeter of the work areas shall be completed to the satisfaction of the Site Engineer prior to commencement of the Work. Temporary erosion control measures shall be continually maintained and updated/replaced throughout the course of site construction activities. Staked hay bails and silt fence should be in place around the perimeter of the site and around each catch basin inlet.

2.0 PRODUCTS

2.1 MATERIALS

A. All materials required for demolition shall conform to the standards and requirements of local codes, municipalities, regulatory agencies, utility companies and other agencies having jurisdiction over the work to be performed and shall be acceptable to the Engineer.

3.0 EXECUTION

3.1 DEMOLITION

A. DEMOLITION

1. Conduct demolition of footings, structures, concrete slabs, utilities, catch basins and other drainage structures, and appurtenances in an orderly and careful manner.
2. Cease operations and notify Engineer immediately if adjacent structures appear to be endangered. Do not resume operations until corrective measures have been taken.
3. Demolished material shall be managed per the requirements of paragraph 3.3 of this section.
4. Remove and promptly manage contaminated or dangerous materials encountered. Contractor is responsible for complying with all disposal facility requirements, including, but not limited to, sampling and analysis of waste streams to characterize as hazardous or non-hazardous, and transportation and disposal.
5. Do not burn or bury materials on site.
6. Remove at grade/subgrade site structures.
7. Remove concrete slabs.
8. Keep work sprinkled with water to minimize dust generation. Provide hoses and water main or hydrant connections for this purpose. Contractor to obtain hydrant permits and pay any fees associated with the use of all hydrants.
9. Backfill areas excavated, and holes caused as a result of demolition to a field density of 92 percent (92%) with clean borrow that meets Massachusetts Department of Transportation for gradation. Coordination and cost of related testing shall be borne by the Contractor and test result shall be provided to the Engineer.
10. Rough grade and compact areas affected by demolition to maintain site grades and contours.
11. Remove demolished materials to temporary stockpile areas as work progresses. Leave Site in clean condition.
12. The use of explosives will not be allowed for the Site.

B. UTILITIES AND RELATED EQUIPMENT

Remove existing utilities and terminate in a manner conforming to the recognized code covering the specific utility and approved by the Engineer. If utility lines are encountered that are not shown on drawings, contact the Engineer for further instructions. Notify all corporations, companies, individuals or local authorities owning, or having jurisdiction over, utilities running to, through, or across areas disturbed by demolition operations. Have all utility services disconnected and capped at service mains within public right-of way in accordance with requirements governing the utility involved.

1. The Contractor shall protect water lines, electric lines, telephone lines, roadways, sidewalks, fencing, and other features to remain in place unless stated or shown to be removed.
2. The Contractor shall protect all off-site trees, structures, utilities, and other features, and shall not trespass beyond the Contractor's work area shown.
3. Upon completion of the work, the Contractor shall remove protective materials, enclosures, and temporary utilities and facilities that were installed in order to maintain services.
4. Inside the limits of the Site, all existing structures, utilities, and appurtenances of any kind shall be completely removed.

Traffic details, road closing permits, sidewalk permits and associated labor and equipment required for the work described above shall be included by the Contractor.

C. PAVING AND SLABS

Remove concrete and asphaltic paving and slabs as indicated on the drawings.

D. DEMOLITION MATERIAL MANAGEMENT

1. Demolition materials such as wood, metal, coated brick and concrete, dismantled equipment and other miscellaneous materials shall be disposed of off site.

3.2 FILLING VOIDS

Completely fill below grade areas, holes, open basements, and other hazardous openings and voids resulting from the demolition or removal of structures (manholes, catch basins, pipes, utilities, etc.) using approved select fill. Ensure that areas to be filled are free of standing water, frost, frozen, or unsuitable material, trash, and debris prior to fill placement. Place fill materials in horizontal layers not exceeding 12" in loose depth and compact each layer to a minimum field density of 92 percent (92%).

3.3 DISPOSITION OF MATERIAL

A. TITLE TO MATERIALS
Except where specified in other sections, all materials and equipment removed, and not reused, shall become the property of the Contractor and shall be removed from Owner's property. Title to materials resulting from demolition, and materials and equipment to be removed, is vested in the Contractor upon approval by the Engineer of the Contractor's demolition and removal procedures, and authorization by the Engineer to begin demolition. The Engineer will not be responsible for the condition or loss of, or damage to, such property after contract award.

3.4 CLEANUP

A. DEBRIS AND RUBBISH

Remove and transport debris and rubbish in a manner that will prevent spillage on pavements, streets or adjacent areas. Clean up spillage from pavements, streets and adjacent areas. Conform to other federal, state and local applicable requirements. Provide means of removing mud from vehicle wheels before entering public thoroughfares. Where mud is tracked onto existing roadways by the Contractor, provide equipment and labor necessary to clean roadways.

1. Maintain areas free of waste materials, debris and rubbish. Maintain Site in a clean and orderly condition.

2. Provide adequate temporary trash storage facilities. Remove trash from Site periodically and dispose of at an approved facility.

3. Maintain neat and orderly work zones. Store equipment and cover materials at the end of each workday.

END OF SECTION

SECTION 03 30 53

MISCELLANEOUS CAST-IN-PLACE CONCRETE

1.0 GENERAL

1.1 DESCRIPTION OF WORK

A. The work of this Section specifies all cast-in-place concrete required for the project including, but not limited to: concrete pads, curb backing, sidewalks, ramps, concrete foundations for utility structures (i.e., catch basins, manholes), concrete collars, footings for sign posts, gate posts, thrust blocks, capping cut and abandoned utilities.

B. The intent of the work of this Section is to provide structurally-sound cast-in-place concrete required for the project. When exposed to view in the finished work, concrete shall have smooth, flat, uniform surface texture and appearance.

C. Remove and replace work in sufficiently large sections as directed by the Engineer.

D. In order to complete the construction of utilities and other related structures, pre-cast concrete shall be used as specified in the corresponding Sections of this Specification document and on the Construction Drawings.

1.2 RELATED SECTIONS AND DOCUMENTS

A. Construction Drawings.

B. Section 31 20 00 – Earth Moving

C. Section 32 16 00 – Curbs, Sidewalks, Islands, and Ramps.

1.3 SUBMITTALS / PROJECT RECORD DOCUMENTS

A. Product Data. Submit manufacturer's product data, installation instructions, use limitations, and recommendations for each proprietary material used and for all other materials as requested by the Engineer. Provide certifications stating that materials comply with requirements.

B. Shop Drawings. Provide sufficient information and detail so that reinforcing can be placed without the use of the Construction Drawings. Provide information on the number of pieces, sizes, grade of steel, accessories, and all other information

needed for fabrication and placement. Show coordination of reinforcing with all items that are to be embedded into concrete construction.

C. Mix Designs. Submit written reports for each proposed mix design at least 15 working days in advance of start of the work. Include specific information on quantities of admixtures and water used. Reports shall include at least ten 7-day and ten 28-day compressive strength test results of exact mix with same products and same source of materials.

D. Test Reports. Submit certified reports for tests required within 48 hours after tests are made. Provide three copies each to the Engineer and the Owner.

E. Delivery Slips. Provide concrete delivery slips showing job name and location, date and time of delivery, quantity of concrete, quality and type of concrete, admixtures, and all other relevant information. Submit at the end of each week.

F. As so required in the Construction Specifications by the Engineer for the building and related work, submit all applicable documents and records verifying conformance with the Specifications.

G. Certificates. Certificates signed by concrete producer shall be submitted.

H. The Contractor shall submit proposed methods for curing of concrete to the Engineer for approval not less than 10 days prior to placement of any concrete.

1.4 REGULATORY REQUIREMENTS

A. Contractor shall maintain access for vehicular and pedestrian traffic as required for other site operations and construction activities. Utilize temporary striping, flagmen, barricades, warning signs, and warning lights as required and any other applicable work as required by the Massachusetts Department of Transportation and/or local agencies. Do not close or obstruct roadways, sidewalks, entrances/exits, hydrants, or any utilities without permits.

B. Follow the applicable safety standards and guidelines as established by OSHA and other applicable local, State, and Federal governing agencies.

C. Contact DigSafe (888-344-7233) 72 hours prior to commencing any excavation.

1.5 REFERENCES / STANDARDS

A. Follow the applicable safety standards and guidelines as established by OSHA and other applicable local, State, and Federal governing agencies.

B. Follow the applicable ASTM standards, including but not limited to:

1.	ASTM A82	Steel Wire, Plain, for Concrete Reinforcement.
2.	ASTM A185	Steel Welded Wire Fabric, Plain, for Concrete.
3.	ASTM A615	Deformed and Plain Billet-Steel Bars for Concrete Reinforcement.
4.	ASTM C33	Concrete Aggregates.
5.	ASTM C39	Comprehensive Strength of Cylindrical Concrete Specimens.
6.	ASTM C94	Ready-Mixed Concrete.
7.	ASTM C143	Slump of Hydraulic Cement Concrete.
8.	ASTM C150	Portland Cement.
9.	ASTM C172	Sampling for Freshly Mixed Concrete.
10.	ASTM C173	Air Content of Freshly Mixed Concrete by the Volumetric Method.
11.	ASTM C260	Air-Entraining Admixtures for Concrete.
12.	ASTM C309	Liquid Membrane-Forming Compounds for Curing Concrete.
13.	ASTM C494	Chemical Admixtures for Concrete.

C. Follow the other applicable references necessary to complete the work, including but not limited to:

1. ACI 318, Building Code Requirements for Reinforced Concrete.
2. ACI 301, Specifications for Structural Concrete for Buildings.
3. ACI 304, Recommended Practice for Measuring, Mixing, and Placing Concrete
4. ACI 305, Recommended Practice for Hot Weather Concreting
5. ACI 306, Recommended Practice for Cold Weather Concreting
6. ACI 347, Recommended Practice for Concrete Form Work
7. ACI 315, Recommended Practice for Detailing Reinforced Concrete Structures
8. CRSI, Reinforced Concrete – A Manual of Standard Practice
9. CRSI, Recommended Practice for Placing Reinforcing Bars
10. CRSI, Recommended Practice for Placing Bar Supports.

1.6 JOB CONDITIONS

A. Acquire all necessary permits, licenses, and/or certificates as required by local, State, and/or Federal agencies prior to the start of the work and thereafter as appropriate.

B. The Contractor shall remove and dispose all waste materials generated during this work. All waste products shall be disposed according to all applicable Federal, State, and local governing agencies.

C. Any waste classified as a hazardous or toxic waste shall be disposed in the appropriate manner to a licensed hazardous waste disposal facility. Verification of proper disposal shall be submitted upon completion of the project.

D. Weather. Protect concrete from damage and reduced-strength or performance due to weather extremes during mixing, placing, and curing.

E. Cold Weather. Unless special precautions are taken to protect concrete, do not work when temperatures are below 40°F within 72 hours after placing concrete.

1. Comply with ACI 306 in cold weather.
2. Maintain concrete temperature to at least 60°F. Reinforcement, forms, and ground in contact with concrete shall be free of frost.
3. Keep concrete and formwork at least 50°F for at least 96 hours after placing concrete.
4. The use of calcium chloride in any form is not permitted.

F. Hot Weather. Concrete, when deposited, shall be less than 80°F. Cool the mix in a manner acceptable to the Engineer if the concrete temperature is higher. Comply with ACI 305 in hot weather.

G. Provide temporary protection to ensure work is being conducted without damage or deterioration at time of final acceptance.

1.7 ENVIRONMENTAL REQUIREMENTS

A. Conform to applicable regulatory procedures when discovering hazardous or contaminated materials.

B. Comply with governing regulations pertaining to environmental protection.

C. Any waste classified as a hazardous or toxic waste shall be disposed in the appropriate manner to a licensed hazardous waste disposal facility. Verification of proper disposal shall be submitted upon completion of the project.

1.8 DELIVERY, STORAGE, AND HANDLING

A. Items of salvageable value to Contractor may be removed from the site. Storage or sale of removed items on the site will not be permitted and shall not interfere with any other work specified in the contract documents.

B. Explosives shall not be brought to the site or used without written consent of authorities having jurisdiction. Such written consent will not relieve Contractor of total responsibility for injury to persons or for damage to property due to blasting operations. The performance of any required blasting shall comply with governing regulations.

C. As specified herein, the Contractor shall manage, deliver, store, and handle all materials in accordance with manufacturer's requirements and applicable governing agencies.

1.9 QUALITY ASSURANCE / QUALITY CONTROL

A. Testing Agency. The Owner will provide the services of a testing agency to verify strength of materials delivered to the site.

B. Provide temporary protection to ensure work being conducted without damage or deterioration at time of final acceptance.

C. Quality Control. Perform testing and sampling for quality control during concrete work as follows:

1. Sample concrete in compliance with ASTM C172.
2. Make one slump test in compliance with ASTM C143 for each 30 cubic yards or portion thereof at discharge from truck and additional tests as deemed appropriate (i.e., at any change in concrete consistency).
3. Make one air content test in compliance with ASTM C173 for each set of compressive strength specimens.
4. Make one set of compressive strength tests in compliance with ASTM C39 for each 30 yards of concrete or fraction thereof. Test one specimen at 7 days, one specimen at 28 days, and retain one specimen for future testing if needed.

2.0 PRODUCTS

2.1 MATERIALS

A. The Contractor shall provide all tools, materials, equipment, and supplies necessary to conduct the work fully to meet the requirements of this Section as detailed on the Construction Drawings.

B. Concrete Materials. Comply with requirements of applicable Sections for concrete materials, admixtures, bonding materials, curing materials, and others as required.

C. Portland Cement. ASTM C150, Type II of U.S. manufacture. Type III cement may also be used at Contractor's option. Only one brand of cement shall be used throughout the project. Limit temperature of cement to 140°F when delivered from batching plant.

D. Aggregates. ASTM C33. Provide aggregates with long history of successful use in similar work and conditions. Grade fine aggregate from ¼-inch to fines; grade coarse aggregate from ¼-inch to size specified.

E. Water. Clean, potable, and free from all impurities, which are detrimental to concrete.

F. Air-Entraining Admixture. ASTM C260. Use only admixtures, which have been accepted in mix designs. Provide one of the following products, or approved equivalent.

1. W.R. Grace, Darex AEA
2. Master Builders, MBVAR
3. Sika Chemical, SIKA AER

G. Water-Reducing Admixture. ASTM C494. Use only admixtures that have been accepted in mix designs. Provide one of the following products, or approved equivalent.

1. W.R. Grace, WRDA
2. Master Builders, Pozzolith
3. Sika Chemical, Plastocrete

H. Reinforcing Bars. ASTM A615. Grade 60, new, deformed, unless indicated otherwise. Tag and identify reinforcing with waterproof marks for checking, sorting, and placing.

I. Welded Wire Fabric. ASTM A185, new, rectangular. Tag and identify reinforcing with waterproof marks for checking, sorting, and placing.

J. Form Work. Contractor's option, but shall be suitable to provide straight, flat, accurately-aligned surfaces within specified tolerances. Where exposed to view in the finished work, form work shall be new and capable of providing exposed surface as specified.

K. Ready-Mix Concrete. Comply with ASTM C94, except where more restrictive requirements are specified in this Section. Batch plant shall be certified in compliance with National Ready-Mixed Concrete Association standards.

L. Curing Compound. Comply with ASTM C309, Type 1. Where direct glue-down finish materials are indicated to be installed over concrete, provide curing compounds that are certified by the corresponding manufacturer to not impair the bonding capability of normally-used construction adhesives.

M. Sealer and Dust Proofer. Provide Sonneborne Kure-N-Seal or Engineer-approved equivalent.

N. Tie Wire. 16-gauge minimum galvanized-steel wire complying with ASTM A82.

O. Form Ties and Spreaders. Provide plastic cone type snap-off steel rod form ties which leave no metal within outer 1 inch of concrete and which leave the inner tie in the concrete when forms are removed. Provide ½-inch x 1 inch plastic cones for sinkages. Do not use wood spreaders or wire ties.

P. Form Release Coatings. Provide commercial formulation non-grain raising and non-staining type form coating compounds that will not bond with, stain, nor adversely affect concrete surfaces, and will not impair subsequent treatments or bonding of concrete surfaces. Coating containing mineral oils or other non-drying ingredients will not be permitted.

Q. Non-Slip Aggregate. Provide #12030 nonferrous metallic abrasive grit.

R. Anchor Bolts. Provide minimum ½-inch diameter, hot-dip galvanized 18-inch long anchor bolts, hooked at ends.

2.2 MIX DESIGN AND TESTING

A. Mix Design. Proportion mixes shall be in compliance with ACI 301. Provide concrete of consistency that will work easily into corners and around reinforcement with the method of placement to be used and will not segregate or allow excess free water to collect on the surface. Provide concrete having the following characteristics:

1. Compressive Strength. 4,000 PSI at 28 days.
2. Slump. 3 inches to 4 inches.
3. Entrained Air Content. 4% to 6% for concrete exposed to freezing and 2% to 4% for all other concrete.
4. Maximum Aggregate Size. ¾ inches.
5. Minimum Cement Content. 5.5 sacks of cement per cubic yard of concrete.
6. Maximum Water/Cement Ratios. 0.50.

B. Mix Design Revisions. When necessary because of job conditions, weather, test results, or other reasonable circumstances, mix designs may be adjusted if submitted to and approved by the Engineer in advance of use.

2.3 CONFIGURATION

Follow the details shown on the Construction Drawings, unless otherwise stated or shown.

3.0 EXECUTION

3.1 EXAMINATION

Contractor shall visit the site prior to submitting the bid for work specified herein and on the Construction Drawings and become familiar with existing site conditions. The Contractor shall evaluate the potential access difficulties and provide all necessary equipment and precautions to comply with the requirements of the Specification. Failure to fully investigate the site conditions shall not relieve the Contractor of the responsibility to adhere to the requirements of this Specification. The Engineer and Owner assume no responsibility for information or opinions concerning site conditions not specifically stated in writing. The site location and specific site features are shown on the Construction Drawings.

3.2 PREPARATION

A. Installer shall examine substrates, supports, and conditions under which this work is to be performed and notify Contractor, in writing, of conditions detrimental to the proper completion of the work. Do not proceed with work until unsatisfactory conditions are corrected. Beginning work means Contractor accepts substrates and conditions.

B. Surface Preparation. Remove loose material from compacted base material surface to produce a firm, smooth surface immediately before placing concrete.

C. Cement Concrete Sidewalks, Islands, and Wheelchair Ramps. Prepare subgrade and construct in strict compliance with the requirements of the Specifications and the Construction Drawings, as modified by the applicable requirements of Division 31 of these Specifications, at a minimum.

3.3 INSTALLATION / CONSTRUCTION / DEMOLITION

A. Surfaces Concealed in the Finished Work. Provide as cast surfaces with at least minimum concrete coverage over reinforcing steel as specified in the Contract Drawings or as otherwise specified in ACI 318. Where concrete is indicated to be directly covered with a thin finish of paint, veneer plaster, or wall covering, provide surfaces as specified for “Surfaces Exposed in the Finished Work.”

B. Surfaces Exposed in the Finished Work. Provide smooth, uniform surfaces that appear monolithic. Remove fins and projections. Fill and patch voids with fine concrete grout. Rub entire surface with burlap bags and neat cement plaster or other acceptable technique to create a fine textured, uniform “plaster-like” surface.

C. Non-Slip Aggregate Finish. Where indicated, provide abrasive, non-slip aggregate finish by troweling 1/4 pound per square foot of abrasive into surface.

D. Sealing. Apply two coats of sealing/dust proofing compound to all concrete surfaces indicated to be left exposed in the finished work. Strictly comply with manufacturer's installation instructions and recommendations. Thoroughly clean and prepare concrete before sealing to remove all discoloration, dirt, and stains.

E. Tolerances

1. The following installed tolerances are allowable variations from locations and dimensions indicated on the Construction Drawings and shall not be added to allowable tolerances indicated for other work.

   a. Allowable Variation from True Plumb: ±1/8-inch in 10.0 feet
   b. Allowable Variation from True Level: ±1/8-inch in 10.0 feet
   c. Allowable Variation from True Line: ±1/8-inch in 10.0 feet
   d. Allowable Variation from True Wall Thickness: ±1/4 inches
   e. Allowable Variation from True Plane of Adjacent Surfaces: ±1/8 inch before finishing; after finishing, joints shall be flush and invisible.
   f. Provide ACI 301 Class A surface finish.

END OF SECTION

SECTION 10 14 53

TRAFFIC SIGNAGE

1.0 GENERAL

1.1 DESCRIPTION OF WORK

Traffic control signs complying with U.S. Department of Transportation, Federal Highway Administration's Manual "Uniform Traffic Control Devices," and as specified. See the Construction Drawings for type, location, and quantity of signs required.

1.2 RELATED SECTIONS AND DOCUMENTS

A. Manufacturer's Mounting Instructions.

B. Construction Drawings

1.3 SUBMITTALS / PROJECT RECORD DOCUMENTS

Submit and record complete information on selected manufacturer, specifications, and warranties.

1.4 REGULATORY REQUIREMENTS

A. Contractor shall maintain access for vehicular and pedestrian traffic as required for other construction activities. Utilize temporary striping, flagmen, barricades, warning signs, and warning lights as required and any other applicable work as required by the Massachusetts Department of Transportation and/or local agencies. Do not close or obstruct roadways, sidewalks, entrances/exits, hydrants, or any utilities without permits.

B. Follow the applicable safety standards and guidelines as established by OSHA and other applicable local, State, and Federal governing agencies.

C. Contact DigSafe (888-344-7233) 72 hours prior to commencing any excavation.

1.5 REFERENCES / STANDARDS

Follow the applicable safety standards and guidelines as established by OSHA and other applicable local, State, and Federal governing agencies.

1.6 JOB CONDITIONS

A. Conform to applicable regulatory procedures when discovering hazardous or contaminated materials.

B. Comply with governing regulations pertaining to environmental protection.

C. Acquire all necessary permits, licenses, and/or certificates as required by local, State, and/or Federal agencies prior to the start of the work and thereafter as appropriate.

D. The Contractor shall remove and dispose all waste materials generated during this work, including waste paints, adhesives and glues, sealants, and other related compounds/chemicals. All waste products shall be disposed according to all applicable Federal, State, and local governing agencies.

E. Any waste classified as a hazardous or toxic waste shall be disposed in the appropriate manner to a licensed hazardous waste disposal facility. Verification of proper disposal shall be submitted upon completion of the project.

1.7 ENVIRONMENTAL REQUIREMENTS

Properly remove and dispose all wastes and unused materials from the site.

1.8 DELIVERY, STORAGE, AND HANDLING

A. Deliver materials and products, and store and handle in strict compliance with manufacturer's instructions and recommendations and applicable governing agencies. Protect from all possible damage.

B. Sequence deliveries to avoid delays, but minimize on-site storage.

C. Materials shall be stored in areas designated by the Engineer and in a manner that is safe since the facility will still be in use during construction.

1.9 QUALITY ASSURANCE / QUALITY CONTROL

Signs to be equivalent to those manufactured by SA-SO, Inc., Grand Prairie, TX or approved equivalent.

2.0 PRODUCTS

2.1 MATERIALS

A. Signs

1. Provide regulatory signage as required, in accordance with the U.S. Department of Transportation "Manual of Uniform Traffic Control Devices" and the Massachusetts Department of Transportation requirements.

B. Posts

1. All Signs. 8 Foot U-channel Posts with galvanized sign mounting hardware for each sign.
2. Mount and install signs in accordance with manufacturer's instructions and/or as specified on the Construction Drawings.

2.2 MIX DESIGN AND TESTING

Where applicable, mix design and testing shall be conducted in order to perform the work to fully meet the requirements of this Section.

2.3 CONFIGURATION

Follow the details shown on the Construction Drawings, unless otherwise stated or shown.

3.0 EXECUTION

3.1 EXAMINATION

Contractor shall visit the site prior to submitting the bid for work specified herein and on the Construction Drawings and become familiar with existing site conditions. The Contractor shall evaluate the potential access difficulties and provide all necessary equipment and precautions to comply with the requirements of the Specification. Failure to fully investigate the site conditions shall not relieve the Contractor of the responsibility to adhere to the requirements of this Specification. The Engineer and Owner assume no responsibility for information or opinions concerning site conditions not specifically stated in writing. The site location and specific site features are shown on the Construction Drawings.

3.2 PREPARATION

A. Conduct operations with minimum interference to public or private accesses and facilities. Maintain access and egress at all times and clean or sweep any roadways daily or as required by the governing authority. At such times as deemed necessary by the Owner, dust control shall be provided with sprinkling systems or equipment provided by the Contractor.

B. Protect benchmarks, property corners, and all other survey monuments from damage or displacement. If a marker needs to be removed it shall be referenced by a licensed land surveyor from Titcomb Associates, Inc. and replaced, as necessary, by the same.

C. Provide traffic control as required, in accordance with the U.S. Department of Transportation "Manual of Uniform Traffic Control Devices" and the Massachusetts Department of Transportation requirements.

3.3 INSTALLATION / CONSTRUCTION / DEMOLITION

All work shall conform with the Construction Drawings and in accordance with applicable local, State, and Federal standards.

A. Backfill

After the signs have set sufficiently, the spaces shall be refilled to the required elevation with suitable material that shall be compacted until firm and solid, and neatly graded.

B. Cleaning Up and Adjusting

1. Sweep, clean, and wash free of stains, discolorations, dirt, and other foreign material just prior to final inspection.
2. Protect any concrete from damage until acceptance of work. Exclude traffic from work area for applicable period of time after placement. When construction traffic is permitted, maintain work areas as clean as possible.

END OF SECTION

SECTION 31 10 00

SITE CLEARING

1.0 GENERAL

1.1 RELATED DOCUMENTS

A. Drawings and general provisions of the Contract, including General and Supplementary Conditions.

1.2 SUMMARY

A. Section Includes:

1. Protecting existing vegetation to remain.
2. Removing existing vegetation.
3. Clearing and grubbing.
4. Stripping and stockpiling topsoil.
5. Removing above- and below-grade site improvements.
6. Disconnecting, capping or sealing, and removing site utilities or abandoning site utilities in place.
7. Temporary erosion and sedimentation control measures.

B. Related Sections:

1. Section 31 01 10 - Site Preparation
2. Section 31 20 00 - Earth Moving
3. Section 02 41 19 - Selective Demolition

1.3 DEFINITIONS

A. Subsoil: All soil beneath the topsoil layer of the soil profile and typified by the lack of organic matter and soil organisms.

B. Surface Soil: Soil that is present at the top layer of the existing soil profile at the Project site. In undisturbed areas, the surface soil is typically topsoil; but in disturbed areas such as urban environments, the surface soil can be subsoil.

C. Topsoil: Top layer of the soil profile consisting of existing native surface topsoil or existing in-place surface soil and is the zone where plant roots grow.

D. Topsoil: Top layer of the soil profile consisting of existing native surface topsoil or existing in-place surface soil and is the zone where plant roots grow. Its appearance is generally friable, pervious, and black or a darker shade of brown, gray, or red than underlying subsoil; reasonably free of subsoil, clay lumps, gravel, and other objects more than 2 inches in diameter; and free of subsoil and weeds, roots, toxic materials, or other nonsoil materials.

E. Plant-Protection Zone: Area surrounding individual trees, groups of trees, shrubs, or other vegetation to be protected during construction, and indicated on Drawings.

F. Tree-Protection Zone: Area surrounding individual trees or groups of trees to be protected during construction and as indicated on Drawings or defined by a circle

concentric with each tree with a radius 1.5 times the diameter of the drip line unless otherwise indicated.

G. Vegetation: Trees, shrubs, groundcovers, grass, and other plants.

1.4 MATERIAL OWNERSHIP

A. Except for stripped topsoil and other materials indicated to be stockpiled or otherwise remain Owner's property, cleared materials shall become Contractor's property and shall be removed from Project site.

1.5 INFORMATIONAL SUBMITTALS

A. Existing Conditions: Documentation of existing trees and plantings, adjoining construction, and site improvements that establishes preconstruction conditions that might be misconstrued as damage caused by site clearing.

1. Use sufficiently detailed photographs or videotape.
2. Include plans and notations to indicate specific wounds and damage conditions of each tree or other plants designated to remain.

B. Record Drawings: Identifying and accurately showing locations of capped utilities and other subsurface structural, electrical, and mechanical conditions.

1.6 QUALITY ASSURANCE

A. Preinstallation Conference: Conduct conference at a location to be determined prior to construction.

1.7 PROJECT CONDITIONS

A. Traffic: Minimize interference with adjoining roads, streets, walks, and other adjacent occupied or used facilities during site-clearing operations.

1. Do not close or obstruct streets, walks, or other adjacent occupied or used facilities without permission from Owner and authorities having jurisdiction.
2. Provide alternate routes around closed or obstructed traffic ways if required by Owner or authorities having jurisdiction.

B. Improvements on Adjoining Property: Authority for performing site clearing indicated on property adjoining Owner's property will be obtained by Owner before award of Contract.

1. Do not proceed with work on adjoining property until directed by Engineer.

C. Salvable Improvements: Carefully remove items indicated to be salvaged and stored where indicated by Owner.

D. Utility Locator Service: Premark out the project site and notify Dig Safe before site clearing.

E. Do not commence site clearing operations until temporary erosion- and sedimentation-control measures are in place.

F. The following practices are prohibited within protection zones:

1. Storage of construction materials, debris, or excavated material.
2. Parking vehicles or equipment.
3. Foot traffic.
4. Erection of sheds or structures.
5. Impoundment of water.
6. Excavation or other digging unless otherwise indicated.
7. Attachment of signs to or wrapping materials around trees or plants unless otherwise indicated.

G. Do not direct vehicle or equipment exhaust towards protection zones.

H. Prohibit heat sources, flames, ignition sources, and smoking within or near protection zones.

I. Soil Stripping, Handling, and Stockpiling: Perform only when the topsoil is dry or slightly moist.

2.0 PRODUCTS

2.1 MATERIALS

A. Satisfactory Soil Material: Requirements for satisfactory soil material are specified in Section 31 20 00 - Earth Moving.

1. Obtain approved borrow soil material off-site when satisfactory soil material is not available on-site.

2. The coordination and cost of testing on-site materials shall be borne by the Contractor.

3.0 EXECUTION

3.1 PREPARATION

A. Protect and maintain benchmarks and survey control points from disturbance during construction.

B. Locate and clearly identify trees, shrubs, and other vegetation to remain or to be relocated. Wrap a 1-inch blue vinyl tie tape flag around each tree trunk at 54 inches above the ground.

C. Protect existing site improvements to remain from damage during construction.

1. Restore damaged improvements to their original condition, as acceptable to Owner.

3.2 TEMPORARY EROSION AND SEDIMENTATION CONTROL

A. Provide temporary erosion- and sedimentation-control measures to prevent soil erosion and discharge of soil-bearing water runoff or airborne dust to adjacent properties and walkways, according to erosion- and sedimentation-control Drawings and requirements of authorities having jurisdiction.

B. Verify that flows of water redirected from construction areas or generated by construction activity do not enter or cross protection zones.

C. Inspect, maintain, and repair erosion- and sedimentation-control measures during construction until permanent vegetation has been established.

D. Remove erosion and sedimentation controls and restore and stabilize areas disturbed during removal.

3.3 TREE AND PLANT PROTECTION

A. General: Protect trees and plants remaining on-site according to requirements in Section 01 56 39 - Temporary Tree and Plant Protection.

B. Repair or replace trees, shrubs, and other vegetation indicated to remain or be relocated that are damaged by construction operations, in a manner approved by engineer.

3.4 EXISTING UTILITIES

A. Owner will arrange for disconnecting and sealing indicated utilities that serve existing structures before site clearing, when requested by Contractor.

1. Verify that utilities have been disconnected and capped before proceeding with site clearing.

B. Locate, identify, disconnect, and seal or cap utilities indicated to be removed or abandoned in place.

1. Arrange with utility companies to shut off indicated utilities.
2. Owner will arrange to shut off indicated utilities when requested by Contractor.

C. Locate, identify, and disconnect utilities indicated to be abandoned in place.

D. Interrupting Existing Utilities: Do not interrupt utilities serving facilities occupied by Owner or others unless permitted under the following conditions and then only after arranging to provide temporary utility services according to requirements indicated:

1. Notify engineer not less than two days in advance of proposed utility interruptions.
2. Do not proceed with utility interruptions without engineer's written permission.

E. Excavate for and remove underground utilities indicated to be removed.

F. Removal of underground utilities is included in earthwork sections and with applicable fire suppression, plumbing, HVAC, electrical, communications, electronic safety and security and utilities sections and Section 02 40 00 - Demolition.

3.5 CLEARING AND GRUBBING

A. Remove obstructions, trees, shrubs, and other vegetation to permit installation of new construction.

1. Do not remove trees, shrubs, and other vegetation indicated to remain or to be relocated.
2. Grind down stumps and remove roots, obstructions, and debris to a depth of 18 inches below exposed subgrade.
3. Use only hand methods for grubbing within protection zones.
4. Chip removed tree branches and dispose of off-site.

B. Fill depressions caused by clearing and grubbing operations with satisfactory soil material unless further excavation or earthwork is indicated.

1. Place fill material in horizontal layers not exceeding a loose depth of 8 inches and compact each layer to a density equal to adjacent original ground.

3.6 TOPSOIL STRIPPING

A. Remove sod and grass before stripping topsoil.

B. Strip topsoil to depth indicated on Drawings or to depth of 6 inches in a manner to prevent intermingling with underlying subsoil or other waste materials.

1. Remove subsoil and nonsoil materials from topsoil, including clay lumps, gravel, and other objects more than 2 inches in diameter; trash, debris, weeds, roots, and other waste materials.

C. Stockpile topsoil away from edge of excavations without intermixing with subsoil. Grade and shape stockpiles to drain surface water. Cover to prevent windblown dust and erosion by water.

1. Limit height of topsoil stockpiles to 72 inches.
2. Do not stockpile topsoil within protection zones.
3. Dispose of surplus topsoil. Surplus topsoil is that which exceeds quantity indicated to be stockpiled or reused.
4. Stockpile surplus topsoil to allow for respreading deeper topsoil.

3.7 SITE IMPROVEMENTS

A. Remove existing above and below-grade improvements as indicated and necessary to facilitate new construction.

B. Remove slabs, paving, curbs, gutters, and aggregate base as indicated.

1. Unless existing full-depth joints coincide with line of demolition, neatly saw-cut along line of existing pavement to remain before removing adjacent existing pavement. Saw-cut faces vertically.
2. Paint cut ends of steel reinforcement in concrete to remain with two coats of antirust coating, following coating manufacturer's written instructions. Keep paint off surfaces that will remain exposed.

3.8 DISPOSAL OF SURPLUS AND WASTE MATERIALS

A. Remove surplus soil material, unsuitable topsoil, obstructions, demolished materials, and waste materials including trash and debris, and legally dispose of them off Owner's property.

B. Separate recyclable materials produced during site clearing from other nonrecyclable materials. Store or stockpile without intermixing with other materials and transport them to recycling facilities. Do not interfere with other Project work.

END OF SECTION

SECTION 31 20 00

EARTH MOVING

1.0 GENERAL

1.1 RELATED DOCUMENTS

A. Drawings and general provisions of the Contract, including General and Supplementary Conditions and Division 01 Specification Sections, apply to this Section.

1.2 SUMMARY

A. Section Includes:

1. Preparing subgrades for pavements, turf and grasses and plants.
2. Excavating and backfilling for buildings and structures.
3. Drainage course for concrete slabs-on-grade.
4. Subbase course for concrete pavements.
5. Subbase course and base course for asphalt paving.
6. Subsurface drainage backfill for walls and trenches.
7. Excavating and backfilling trenches for utilities and pits for buried utility structures.
8. Excavating well hole to accommodate elevator-cylinder assembly.

B. Related Sections:

1. Section 31 10 00 - Site Clearing
2. Section 31 23 19- Dewatering

1.3 UNIT PRICES

A. Rock Measurement: Volume of rock actually removed, measured in original position, but not to exceed the following. Unit prices for rock excavation include replacement with approved materials.

1. 24 inches outside of concrete forms other than at footings.
2. 12 inches outside of concrete forms at footings.
3. 6 inches outside of minimum required dimensions of concrete cast against grade.
4. Outside dimensions of concrete walls indicated to be cast against rock without forms or exterior waterproofing treatments.
5. 6 inches beneath bottom of concrete slabs-on-grade.
6. 6 inches beneath pipe in trenches, and the greater of 24 inches wider than pipe or 42 inches wide.

1.4 DEFINITIONS

A. Backfill: Soil material or controlled low-strength material used to fill an excavation.

1. Initial Backfill: Backfill placed beside and over pipe in a trench, including haunches to support sides of pipe.
2. Final Backfill: Backfill placed over initial backfill to fill a trench.

B. Base Course: Aggregate layer placed between the subbase course and hot-mix asphalt paving.

C. Bedding Course: Aggregate layer placed over the excavated subgrade in a trench before laying pipe.

D. Borrow Soil: Satisfactory soil imported from off-site for use as fill or backfill.

E. Drainage Course: Aggregate layer supporting the slab-on-grade that also minimizes upward capillary flow of pore water.

F. Excavation: Removal of material encountered above subgrade elevations and to lines and dimensions indicated.

1. Authorized Additional Excavation: Excavation below subgrade elevations or beyond indicated lines and dimensions as directed by engineer. Authorized additional excavation and replacement material will be paid for according to Contract provisions for unit prices.
2. Bulk Excavation: Excavation more than 10 feet in width and more than 30 in length.
3. Unauthorized Excavation: Excavation below subgrade elevations or beyond indicated lines and dimensions without direction by Engineer. Unauthorized excavation, as well as remedial work directed by Engineer, shall be without additional compensation.

G. Fill: Soil materials used to raise existing grades.

H. Structures: Buildings, footings, foundations, retaining walls, slabs, tanks, curbs, mechanical and electrical appurtenances, or other man-made stationary features constructed above or below the ground surface.

I. Subbase Course: Aggregate layer placed between the subgrade and base course for hot-mix asphalt pavement, or aggregate layer placed between the subgrade and a cement concrete pavement or a cement concrete or hot-mix asphalt walk.

J. Subgrade: Uppermost surface of an excavation or the top surface of a fill or backfill immediately below subbase, drainage fill, drainage course, or topsoil materials.

K. Utilities: On-site underground pipes, conduits, ducts, and cables, as well as underground services within buildings.

1.5 ACTION SUBMITTALS

A. Product Data: For each type of the following manufactured products required:

1. Geotextiles.
2. Controlled low-strength material, including design mixture.
3. Geofoam.
4. Warning tapes.

B. Samples for Verification: For the following products, in sizes indicated below:

1. Geotextile: 12 by 12 inches.
2. Warning Tape: 6 inches wide; of each color.

1.6 INFORMATIONAL SUBMITTALS

A. Qualification Data: For qualified testing agency.

B. Material Test Reports: For each on-site and borrow soil material proposed for fill and backfill as follows:

1. Classification according to ASTM D 2487.
2. Laboratory compaction curve according to ASTM D 698 or ASTM D 1557.

C. Pre-excavation Photographs or Videotape: Show existing conditions of adjoining construction and site improvements, including finish surfaces, that might be misconstrued as damage caused by earth moving operations. Submit before earth moving begins.

1.7 QUALITY ASSURANCE

A. Geotechnical Testing Agency Qualifications: Qualified according to ASTM E 329 and ASTM D 3740 for testing indicated.

B. Pre-excavation Conference: Conduct conference at a location to be determined prior to construction.

1.8 PROJECT CONDITIONS

A. Traffic: Minimize interference with adjoining roads, streets, walks, and other adjacent occupied or used facilities during earth moving operations.

1. Do not close or obstruct streets, walks, or other adjacent occupied or used facilities without permission from Owner and authorities having jurisdiction.
2. Provide alternate routes around closed or obstructed traffic ways if required by Owner or authorities having jurisdiction.

B. Improvements on Adjoining Property: Authority for performing earth moving indicated on property adjoining Owner's property will be obtained by Owner before award of Contract.

1. Do not proceed with work on adjoining property until directed by Engineer.

C. Utility Locator Service: Notify Dig Safe for area where Project is located before beginning earth moving operations.

D. Do not commence earth moving operations until temporary erosion- and sedimentation-control measures, Section 31 10 00 -Site Clearing are in place.

E. Do not commence earth moving operations until plant-protection measures specified in Section 01 56 39 -Temporary Tree and Plant Protection are in place.

F. The following practices are prohibited within protection zones:

1. Storage of construction materials, debris, or excavated material.
2. Parking vehicles or equipment.
3. Foot traffic.
4. Erection of sheds or structures.
5. Impoundment of water.
6. Excavation or other digging unless otherwise indicated.
7. Attachment of signs to or wrapping materials around trees or plants unless otherwise indicated.

G. Do not direct vehicle or equipment exhaust towards protection zones.

H. Prohibit heat sources, flames, ignition sources, and smoking within or near protection zones.

2.0 PRODUCTS

2.1 SOIL MATERIALS

A. General: Provide borrow soil materials when sufficient satisfactory soil materials are not available from excavations.

B. Satisfactory Soils: Soil Classification Groups GW, GP, GM, SW, SP, and SM according to ASTM D 2487, Groups A-1, A-2-4, A-2-5, and A-3 according to AASHTO M 145, or a combination of these groups; free of rock or gravel larger

than 3 inches in any dimension, debris, waste, frozen materials, vegetation, and other deleterious matter.

C. Unsatisfactory Soils: Soil Classification Groups GC, SC, CL, ML, OL, CH, MH, OH, and PT according to ASTM D 2487, Groups A-2-6, A-2-7, A-4, A-5, A-6, and A-7 according to AASHTO M 145, or a combination of these groups.

1. Unsatisfactory soils also include satisfactory soils not maintained within 2 percent of optimum moisture content at time of compaction.

D. Subbase Material: Naturally or artificially graded mixture of natural or crushed gravel, crushed stone, and natural or crushed sand; ASTM D 2940; with at least 90 percent passing a 1-1/2-inch sieve and not more than 12 percent passing a No. 200 sieve.

E. Base Course: Naturally or artificially graded mixture of natural or crushed gravel, crushed stone, and natural or crushed sand; ASTM D 2940; with at least 95 percent passing a 1-1/2-inch sieve and not more than 8 percent passing a No. 200 sieve.

F. Engineered Fill: Naturally or artificially graded mixture of natural or crushed gravel, crushed stone, and natural or crushed sand; ASTM D 2940; with at least 90 percent passing a 1-1/2-inch sieve and not more than 12 percent passing a No. 200 sieve.

G. Bedding Course: Naturally or artificially graded mixture of natural or crushed gravel, crushed stone, and natural or crushed sand; ASTM D 2940; except with 100 percent passing a 1-inch sieve and not more than 8 percent passing a No. 200 sieve.

H. Drainage Course: Narrowly graded mixture of washed crushed stone, or crushed or uncrushed gravel; ASTM D 448; coarse-aggregate grading Size 57; with 100 percent passing a 1-1/2-inch sieve and 0 to 5 percent passing a No. 8 sieve.

I. Filter Material: Narrowly graded mixture of natural or crushed gravel, or crushed stone and natural sand; ASTM D 448; coarse-aggregate grading Size 67; with 100 percent passing a 1-inch sieve and 0 to 5 percent passing a No. 4 sieve.

J. Sand: ASTM C 33; fine aggregate.

K. Impervious Fill: Clayey gravel and sand mixture capable of compacting to a dense state.

2.2 GEOTEXTILES

A. Subsurface Drainage Geotextile: Nonwoven needle-punched geotextile, manufactured for subsurface drainage applications, made from polyolefins or polyesters; with elongation greater than 50 percent; complying with AASHTO M 288 and the following, measured per test methods referenced:

1. Survivability: Class 2; AASHTO M 288.
2. Grab Tensile Strength: 157 lbf; ASTM D 4632.
3. Sewn Seam Strength: 142 lbf; ASTM D 4632.
4. Tear Strength: 56 lbf; ASTM D 4533.
5. Puncture Strength: 56 lbf; ASTM D 4833.
6. Apparent Opening Size: No. 40 sieve, maximum; ASTM D 4751.
7. Permittivity: 0.1 per second, minimum; ASTM D 4491.

8. UV Stability: 50 percent after 500 hours' exposure; ASTM D 4355.

B. Separation Geotextile: Woven geotextile fabric, manufactured for separation applications, made from polyolefins or polyesters; with elongation less than 50 percent; complying with AASHTO M 288 and the following, measured per test methods referenced:

1. Survivability: Class 2; AASHTO M 288.
2. Grab Tensile Strength: 247 lbf ; ASTM D 4632.
3. Sewn Seam Strength: 222 lbf; ASTM D 4632.
4. Tear Strength: 90 lbf; ASTM D 4533.
5. Puncture Strength: 90 lbf ; ASTM D 4833.
6. Apparent Opening Size: No. 60 sieve, maximum; ASTM D 4751.
7. Permittivity: 0.02 per second, minimum; ASTM D 4491.
8. UV Stability: 50 percent after 500 hours' exposure; ASTM D 4355.

2.3 ACCESSORIES

A. Warning Tape: Acid- and alkali-resistant, polyethylene film warning tape manufactured for marking and identifying underground utilities, 6 inches wide and 4 mils. Revise colors below to comply with local practice or requirements of authorities having jurisdiction.

1. Red: Electric.
2. Yellow: Gas, oil, steam, and dangerous materials.
3. Orange: Telephone and other communications.
4. Blue: Water systems.
5. Green: Sewer systems.

B. Detectable Warning Tape: Acid- and alkali-resistant, polyethylene film warning tape manufactured for marking and identifying underground utilities, a minimum of 6 inches wide and 4 mils thick, continuously inscribed with a description of the utility, with metallic core encased in a protective jacket for corrosion protection, detectable by metal detector when tape is buried up to 30 inches deep; colored as follows:

1. Red: Electric.
2. Yellow: Gas, oil, steam, and dangerous materials.
3. Orange: Telephone and other communications.
4. Blue: Water systems.
5. Green: Sewer systems.

3.0 EXECUTION

3.1 PREPARATION

A. Protect structures, utilities, sidewalks, pavements, and other facilities from damage caused by settlement, lateral movement, undermining, washout, and other hazards created by earth moving operations.

B. Protect and maintain erosion and sedimentation controls during earth moving operations.

C. Protect subgrades and foundation soils from freezing temperatures and frost. Remove temporary protection before placing subsequent materials.

3.2 DEWATERING

A. Prevent surface water and ground water from entering excavations, from ponding on prepared subgrades, and from flooding Project site and surrounding area.

B. Protect subgrades from softening, undermining, washout, and damage by rain or water accumulation.

1. Reroute surface water runoff away from excavated areas. Do not allow water to accumulate in excavations. Do not use excavated trenches as temporary drainage ditches.

3.3 EXCAVATION, GENERAL

A. Unclassified Excavation: Excavate to subgrade elevations regardless of the character of surface and subsurface conditions encountered. Unclassified excavated materials may include rock, soil materials, and obstructions. No changes in the Contract Sum or the Contract Time will be authorized for rock excavation or removal of obstructions.

1. If excavated materials intended for fill and backfill include unsatisfactory soil materials and rock, replace with satisfactory soil materials.
2. Remove rock to lines and grades indicated to permit installation of permanent construction without exceeding the following dimensions:

a. 24 inches outside of concrete forms other than at footings.
b. 12 inches outside of concrete forms at footings.
c. 6 inches outside of minimum required dimensions of concrete cast against grade.
d. Outside dimensions of concrete walls indicated to be cast against rock without forms or exterior waterproofing treatments.
e. 6 inches beneath bottom of concrete slabs-on-grade.
f. 6 inches beneath pipe in trenches, and the greater of 24 inches wider than pipe or 42 inches wide.

B. Classified Excavation: Excavate to subgrade elevations. Material to be excavated will be classified as earth and rock. Do not excavate rock until it has been classified and cross sectioned by Engineer. The Contract Sum will be adjusted for rock excavation according to unit prices included in the Contract Documents. Changes in the Contract Time may be authorized for rock excavation.

1. Earth excavation includes excavating pavements and obstructions visible on surface; underground structures, utilities, and other items indicated to be removed; together with soil, boulders, and other materials not classified as rock or unauthorized excavation.

   a. Intermittent drilling; blasting, if permitted; ram hammering; or ripping of material not classified as rock excavation is earth excavation.

2. Rock excavation includes removal and disposal of rock. Remove rock to lines and subgrade elevations indicated to permit installation of permanent construction without exceeding the following dimensions:

   a. 24 inches outside of concrete forms other than at footings.
   b. 12 inches outside of concrete forms at footings.
   c. 6 inches outside of minimum required dimensions of concrete cast against grade.
   d. Outside dimensions of concrete walls indicated to be cast against rock without forms or exterior waterproofing treatments.
   e. 6 inches beneath bottom of concrete slabs-on-grade.
   f. 6 inches beneath pipe in trenches, and the greater of 24 inches wider than pipe or 42 inches wide.

3.4 EXCAVATION FOR STRUCTURES

A. Excavate to indicated elevations and dimensions within a tolerance of plus or minus 1 inch. If applicable, extend excavations a sufficient distance from structures for placing and removing concrete formwork, for installing services and other construction, and for inspections.

1. Excavations for Footings and Foundations: Do not disturb bottom of excavation. Excavate by hand to final grade just before placing concrete reinforcement. Trim bottoms to required lines and grades to leave solid base to receive other work.
2. Excavation for Underground Tanks, Basins, and Mechanical or Electrical Utility Structures: Excavate to elevations and dimensions indicated within a tolerance of plus or minus 1 inch. Do not disturb bottom of excavations intended as bearing surfaces.

B. Excavations at Edges of Tree- and Plant-Protection Zones:

1. Excavate by hand to indicated lines, cross sections, elevations, and subgrades. Use narrow-tine spading forks to comb soil and expose roots. Do not break, tear, or chop exposed roots. Do not use mechanical equipment that rips, tears, or pulls roots.
2. Cut and protect roots according to requirements in Section 01 56 39 - Temporary Tree and Plant Protection.

3.5 EXCAVATION FOR WALKS AND PAVEMENTS

A. Excavate surfaces under walks and pavements to indicated lines, cross sections, elevations, and subgrades.

3.6 EXCAVATION FOR UTILITY TRENCHES

A. Excavate trenches to indicated gradients, lines, depths, and elevations.

1. Beyond building perimeter, excavate trenches to allow installation of top of pipe below frost line.

B. Excavate trenches to uniform widths to provide the following clearance on each side of pipe or conduit. Excavate trench walls vertically from trench bottom to 12 inches higher than top of pipe or conduit unless otherwise indicated.

1. Clearance: 12 inches each side of pipe or conduit

C. Trench Bottoms: Excavate and shape trench bottoms to provide uniform bearing and support of pipes and conduit. Shape subgrade to provide continuous support for bells, joints, and barrels of pipes and for joints, fittings, and bodies of conduits. Remove projecting stones and sharp objects along trench subgrade.

1. For pipes and conduit less than 6 inches in nominal diameter, hand-excavate trench bottoms and support pipe and conduit on an undisturbed subgrade.

2. For pipes and conduit 6 inches or larger in nominal diameter, shape bottom of trench to support bottom 90 degrees of pipe or conduit circumference. Fill depressions with tamped sand backfill.
3. For flat-bottomed, multiple-duct conduit units, hand-excavate trench bottoms and support conduit on an undisturbed subgrade.
4. Excavate trenches 6 inches deeper than elevation required in rock or other unyielding bearing material to allow for bedding course.

D. Trench Bottoms: Excavate trenches 4 inches deeper than bottom of pipe and conduit elevations to allow for bedding course. Hand-excavate deeper for bells of pipe.

1. Excavate trenches 6 inches deeper than elevation required in rock or other unyielding bearing material to allow for bedding course.

E. Trenches in Tree- and Plant-Protection Zones:

1. Hand-excavate to indicated lines, cross sections, elevations, and subgrades. Use narrow-tine spading forks to comb soil and expose roots. Do not break, tear, or chop exposed roots. Do not use mechanical equipment that rips, tears, or pulls roots.
2. Do not cut main lateral roots or taproots; cut only smaller roots that interfere with installation of utilities.
3. Cut and protect roots according to requirements in Section 01 56 39 - Temporary Tree and Plant Protection.

3.7 UNAUTHORIZED EXCAVATION

A. Fill unauthorized excavation under foundations or wall footings by extending bottom elevation of concrete foundation or footing to excavation bottom, without altering top elevation. Lean concrete fill, with 28-day compressive strength of 2500 psi, may be used when approved by engineer.

1. Fill unauthorized excavations under other construction, pipe, or conduit as directed by engineer.

3.8 STORAGE OF SOIL MATERIALS

A. Stockpile borrow soil materials and excavated satisfactory soil materials without intermixing. Place, grade, and shape stockpiles to drain surface water. Cover to prevent windblown dust.

1. Stockpile soil materials away from edge of excavations. Do not store within drip line of remaining trees.

3.9 BACKFILL

A. Place and compact backfill in excavations promptly, but not before completing the following:

1. Construction below finish grade including, where applicable, subdrainage, dampproofing, waterproofing, and perimeter insulation.
2. Surveying locations of underground utilities for Record Documents.
3. Testing and inspecting underground utilities.
4. Removing concrete formwork.
5. Removing trash and debris.
6. Removing temporary shoring and bracing, and sheeting.
7. Installing permanent or temporary horizontal bracing on horizontally supported walls.

B. Place backfill on subgrades free of mud, frost, snow, or ice.

3.10 UTILITY TRENCH BACKFILL

A. Place backfill on subgrades free of mud, frost, snow, or ice.

B. Place and compact bedding course on trench bottoms and where indicated. Shape bedding course to provide continuous support for bells, joints, and barrels of pipes and for joints, fittings, and bodies of conduits.

C. Trenches under Roadways: Provide 4-inch thick, concrete-base slab support for piping or conduit less than 30 inches below surface of roadways. After installing and testing, completely encase piping or conduit in a minimum of 4 inches of

concrete before backfilling or placing roadway subbase course. Concrete is specified in Section 03 30 00 - Cast-in-Place Concrete

D. Backfill voids with satisfactory soil while removing shoring and bracing.

E. Place and compact initial backfill of subbase material, free of particles larger than 1 inch in any dimension, to a height of 12 inches over the pipe or conduit.

1. Carefully compact initial backfill under pipe haunches and compact evenly up on both sides and along the full length of piping or conduit to avoid damage or displacement of piping or conduit. Coordinate backfilling with utilities testing.

F. Controlled Low-Strength Material: Place initial backfill of controlled low-strength material to a height of 12 inches over the pipe or conduit. Coordinate backfilling with utilities testing.

G. Place and compact final backfill of satisfactory soil to final subgrade elevation.

H. Controlled Low-Strength Material: Place final backfill of controlled low-strength material to final subgrade elevation.

I. Install warning tape directly above utilities, 12 inches below finished grade, except 6 inches below subgrade under pavements and slabs.

3.11 SOIL FILL

A. Plow, scarify, bench, or break up sloped surfaces steeper than 1 vertical to 4 horizontal so fill material will bond with existing material.

B. Place and compact fill material in layers to required elevations as follows:

1. Under grass and planted areas, use satisfactory soil material.
2. Under walks and pavements, use satisfactory soil material.
3. Under steps and ramps, use engineered fill.
4. Under building slabs, use engineered fill.
5. Under footings and foundations, use engineered fill.

C. Place soil fill on subgrades free of mud, frost, snow, or ice.

3.12 SOIL MOISTURE CONTROL

A. Uniformly moisten or aerate subgrade and each subsequent fill or backfill soil layer before compaction to within 2 percent of optimum moisture content.

1. Do not place backfill or fill soil material on surfaces that are muddy, frozen, or contain frost or ice.
2. Remove and replace, or scarify and air dry, otherwise satisfactory soil material that exceeds optimum moisture content by 2 percent and is too wet to compact to specified dry unit weight.

3.13 COMPACTION OF SOIL BACKFILLS AND FILLS

A. Place backfill and fill soil materials in layers not more than 8 inches loose depth for material compacted by heavy compaction equipment, and not more than 4 inches in loose depth for material compacted by hand-operated tampers.

B. Place backfill and fill soil materials evenly on all sides of structures to required elevations, and uniformly along the full length of each structure.

C. Compact soil materials to not less than the following percentages of maximum dry unit weight according to ASTM D 698or ASTM D 1557:

1. Under structures, building slabs, steps, and pavements, scarify and re-compact top 12 inches of existing subgrade and each layer of backfill or fill soil material at 95 percent.
2. Under walkways, scarify and re-compact top 6 inches below subgrade and compact each layer of backfill or fill soil material at 92 percent.
3. Under turf or unpaved areas, scarify and re-compact top 6 inches below subgrade and compact each layer of backfill or fill soil material at 85 percent.
4. For utility trenches, compact each layer of initial and final backfill soil material at 85 percent.

3.14 GRADING

A. General: Uniformly grade areas to a smooth surface, free of irregular surface changes. Comply with compaction requirements and grade to cross sections, lines, and elevations indicated.

1. Provide a smooth transition between adjacent existing grades and new grades.
2. Cut out soft spots, fill low spots, and trim high spots to comply with required surface tolerances.

B. Site Rough Grading: Slope grades to direct water away from buildings and to prevent ponding. Finish subgrades to required elevations within the following tolerances:

1. Turf or Unpaved Areas: Plus or minus 1 inch.
2. Walks: Plus or minus 1 inch.
3. Pavements: Plus or minus 1/2 inch.

3.15 SUBBASE AND BASE COURSES UNDER PAVEMENTS AND WALKS

A. Place subbase course and base course on subgrades free of mud, frost, snow, or ice.

B. On prepared subgrade, place subbase course and base course under pavements and walks as follows:

1. Install separation geotextile on prepared subgrade according to manufacturer's written instructions, overlapping sides and ends.
2. Place base course material over subbase course under hot-mix asphalt pavement.
3. Shape subbase course and base course to required crown elevations and cross-slope grades.
4. Place subbase course and base course 6 inches or less in compacted thickness in a single layer.
5. Place subbase course and base course that exceeds 6 inches in compacted thickness in layers of equal thickness, with no compacted layer more than 6 inches thick or less than 3 inches thick.
6. Compact subbase course and base course at optimum moisture content to required grades, lines, cross sections, and thickness to not less than 95 percent of maximum dry unit weight according to ASTM D 698 and/or ASTM D 1557.

C. Pavement Shoulders: Place shoulders along edges of subbase course and base course to prevent lateral movement. Construct shoulders, at least 12 inches wide, of satisfactory soil materials and compact simultaneously with each subbase and base layer to not less than 95 percent of maximum dry unit weight according to ASTM D 698 and/or ASTM D 1557.

3.16 DRAINAGE COURSE UNDER CONCRETE SLABS-ON-GRADE

A. Place drainage course on subgrades free of mud, frost, snow, or ice.

B. On prepared subgrade, place and compact drainage course under cast-in-place concrete slabs-on-grade as follows:

1. Install subdrainage geotextile on prepared subgrade according to manufacturer's written instructions, overlapping sides and ends.
2. Place drainage course 6 inches or less in compacted thickness in a single layer.
3. Place drainage course that exceeds 6 inches in compacted thickness in layers of equal thickness, with no compacted layer more than 6 inches thick or less than 3 inches thick.

4. Compact each layer of drainage course to required cross sections and thicknesses to not less than 95 percent of maximum dry unit weight according to ASTM D 698.

3.17 FIELD QUALITY CONTROL

A. Special Inspections: Owner will engage a qualified special inspector to perform the following special inspections:

1. Determine prior to placement of fill that site has been prepared in compliance with requirements.
2. Determine that fill material and maximum lift thickness comply with requirements.
3. Determine, at the required frequency, that in-place density of compacted fill complies with requirements.

B. Testing Agency An independent testing laboratory selected and paid by the contractor, shall be retained to perform testing on-site.

C. Allow testing agency to inspect and test subgrades and each fill or backfill layer. Proceed with subsequent earth moving only after test results for previously completed work comply with requirements.

D. Footing Subgrade: At footing subgrades, at least one test of each soil stratum will be performed to verify design bearing capacities. Subsequent verification and approval of other footing subgrades may be based on a visual comparison of subgrade with tested subgrade when approved by Engineer.

E. Testing agency will test compaction of soils in place according to ASTM D 1556, ASTM D 2167, ASTM D 2922, and ASTM D 2937, as applicable. Tests will be performed at the following locations and frequencies:

1. Paved and Building Slab Areas: At subgrade and at each compacted fill and backfill layer, at least one test for every 2000 sq. ft. or less of paved area or building slab, but in no case fewer than three tests.
2. Foundation Wall Backfill: At each compacted backfill layer, at least one test for every 100 feet or less of wall length, but no fewer than two tests.
3. Trench Backfill: At each compacted initial and final backfill layer, at least one test for every 150 feet or less of trench length, but no fewer than two tests.

F. When testing agency reports that subgrades, fills, or backfills have not achieved degree of compaction specified, scarify and moisten or aerate, or remove and replace soil materials to depth required; re-compact and retest until specified compaction is obtained.

3.18 PROTECTION

A. Protecting Graded Areas: Protect newly graded areas from traffic, freezing, and erosion. Keep free of trash and debris.

B. Repair and re-establish grades to specified tolerances where completed or partially completed surfaces become eroded, rutted, settled, or where they lose compaction due to subsequent construction operations or weather conditions.

1. Scarify or remove and replace soil material to depth as directed by engineer; reshape and re-compact.

C. Where settling occurs before Project correction period elapses, remove finished surfacing, backfill with additional soil material, compact, and reconstruct surfacing.

1. Restore appearance, quality, and condition of finished surfacing to match adjacent work, and eliminate evidence of restoration to greatest extent possible.

3.19 DISPOSAL OF SURPLUS AND WASTE MATERIALS

A. Remove surplus satisfactory soil and waste materials, including unsatisfactory soil, trash, and debris, and legally dispose of them off Owner's property.

B. Transport surplus satisfactory soil to designated storage areas on Owner's property. Stockpile or spread soil as directed by Engineer.

1. Remove waste materials, including unsatisfactory soil, trash, and debris, and legally dispose of them off Owner's property.

END OF SECTION

SECTION 31 01 10

SITE PREPARATION

1.0 GENERAL

1.1 DESCRIPTION OF WORK

A. Protection of existing structures, landscaping, vegetation, light poles, and any existing on-site materials/features indicated on the Contract documents and Construction Drawings to remain.

B. Stripping topsoil from areas that are to be incorporated into the limits of the project and where so indicated on the Construction Drawings.

1.2 RELATED SECTIONS AND DOCUMENTS

A. Section 02 40 00 – Demolition

B. Section 31 20 00 – Earth Moving

C. Section 31 25 00 – Erosion and Sediment Control

D. Section 32 22 26 – Asphalt Base Course

E. Section 32 12 16 – Asphalt Paving

F. Construction Drawings

G. Geotechnical Engineering Report

1.3 SUBMITTALS / PROJECT RECORD DOCUMENTS

The Contractor shall submit any documents necessary to conform to the requirements of this Section.

1.4 REGULATORY REQUIREMENTS

A. Contractor shall maintain access for vehicular and pedestrian traffic as required for other construction activities and site operations. Utilize temporary striping, flagmen, barricades, warning signs, and warning lights as required and any other applicable work as required by the Massachusetts Department of Transportation and/or local agencies. Do not close or obstruct roadways, sidewalks, entrances/exits, hydrants, or any utilities without permits.

B. Follow the applicable safety standards and guidelines as established by OSHA and other applicable local, State, and Federal governing agencies.

C. Contact DigSafe (888-344-7233) 72 hours prior to commencing any excavation.

1.5 REFERENCES / STANDARDS

A. Follow the applicable safety standards and guidelines as established by OSHA and other applicable local, State, and Federal governing agencies.

B. Follow the requirements outlined in project specific permits and requirements.

1.6 JOB CONDITIONS

A. Conditions existing at time of inspection for bidding purposes will be maintained by Owner in so far as practical.

B. Variations to conditions or discrepancy in actual conditions as they apply to site preparation operations are to be brought to the attention of the Owner prior to the commencement of any site work.

C. Owner assumes no responsibility for the condition of structures to be demolished.

1.7 ENVIRONMENTAL REQUIREMENTS

A. Construct temporary erosion control system as defined in the Construction Drawings and Specifications or as directed by the Engineer to protect adjacent properties and water resources from erosion and sedimentation.

B. Conform to any requirements specified in Section 31 20 00 – Earthwork.

C. Conform to applicable regulatory procedures when discovering hazardous, special, or contaminated materials.

D. Comply with governing regulations pertaining to environmental protection.

1.8 DELIVERY, STORAGE AND HANDLING

As specified herein, the Contractor shall manage, deliver, store, and handle all materials in accordance with manufacturer's requirements and applicable governing agencies.

1.9 QUALITY ASSURANCE / QUALITY CONTROL

The appropriate QA/QC measures shall apply throughout the entire work of this project.

2.0 PRODUCTS

2.1 MATERIALS

The Contractor shall provide all tools, materials, equipment, and supplies necessary to conduct the work fully to meet the requirements of this Section as detailed on the Construction Drawings.

2.2 CONFIGURATION

The Contractor shall perform the work in accordance with the details shown on the Construction Drawings, or as specified herein.

3.0 EXECUTION

3.1 EXAMINATION

The Contractor shall visit the site prior to submitting the bid for work specified herein and on the Construction Drawings and become familiar with existing site conditions. The Contractor shall evaluate the potential access difficulties and provide all necessary equipment and precautions to comply with the requirements of the Specification. Failure to fully investigate the site conditions shall not relieve the Contractor of the responsibility to adhere to the requirements of this Specification. The Engineer and Owner assume no responsibility for information or opinions concerning site conditions not specifically stated in writing. The site location and specific site features are shown on the Construction Drawings.

3.2 PREPARATION

A. Verify that existing plant life and clearing limits are clearly tagged, identified, and marked in such a manner as to ensure their safety throughout construction operations.

B. Locate and identify existing utilities that are to remain and protect them from damage.

C. Protect trees, plant growth, and features designated to remain as final landscape.

D. Conduct operations with minimum interference to public or private accesses and facilities. Maintain access and egress at all times and clean or sweep any roadways daily or as required by the governing authority. At such times as deemed necessary by the Owner, dust control shall be provided with sprinkling systems or equipment provided by the Contractor.

E. Protect benchmarks, property corners, and all other survey monuments from damage or displacement. If a marker needs to be removed it shall be referenced by a licensed land surveyor and replaced, as necessary, by the same at the Contractor's expense and without additional compensation.

F. Provide traffic control as required, in accordance with the U.S. Department of Transportation "Manual of Uniform Traffic Control Devices" and the Massachusetts Department of Transportation requirements.

3.3 INSTALLATION / CONSTRUCTION / DEMOLITION

A. Clearing

1. Clear areas required for access to the site and execution of work.
2. Unless otherwise indicated on the Construction Drawings, remove trees, shrubs, grass, other vegetation, improvements, or obstructions interfering with installation of new construction. Removal includes digging out stumps and roots. Depressions caused by clearing and grubbing operations shall be filled to subgrade elevation to avoid water ponding. Satisfactory fill material shall be placed in horizontal layers not exceeding 12-inch loose depths, and thoroughly compacted per fill requirements of this Section.
3. Remove grass, trees, plant life, stumps, and all other construction debris from the site to an approved landfill that is suitable for handling such material according to applicable State and Federal laws and regulations.

B. Topsoil Excavation

1. Strip topsoil from areas that are to be filled, excavated, landscaped, or re-graded to such a depth that it prevents intermingling with underlying subsoil or questionable material.
2. Cut heavy growths of grass from areas before stripping and remove with the rest of the cleared vegetative material.
3. Topsoil shall consist of organic surficial soil found in depths of not more than 6 inches. Satisfactory topsoil is reasonably free of subsoil, clay lumps, stones and other objects over two inches in diameter, weeds, roots, and other objectionable material.
4. Stockpile topsoil in areas shown or where directed and in a manner that will least interfere with current uses of the site. Construct storage piles to freely drain surface water and surround with hay bales to prevent sediment transport. Cover storage piles as required, to prevent windblown dust. Dispose unsuitable topsoil as specified for waste material, unless otherwise specified by Owner. Excess topsoil shall be removed from the site for proper disposal by the Contractor unless specifically noted otherwise on the Construction Drawings.

END OF SECTION

SECTION 31 23 13

EXCAVATION, BACKFILL AND COMPACTION FOR PAVEMENT

1.0 GENERAL

1.1 SECTION INCLUDES

A. Excavate to line, grade and configuration as shown in the plans and specifications for proposed pavements.

B. Fill to line, grade and configuration as shown in the plans and specifications for proposed pavements.

C. Compacting fill materials in an acceptable manner as stated herein.

1.2 RELATED SECTIONS

A. Section 31 23 16.26 – Rock and Boulder Removal.

B. Section 32 12 16 – Asphalt Paving.

C. Section 32 16 00 – Curbs, Sidewalks, Islands and Ramps.

D. Construction Drawings.

1.3 REFERENCE STANDARDS

A. American Society for Testing and Materials (ASTM) latest edition.

D 422 Method for Particle Size Analysis of Soils.

D 698 Test for Moisture-Density Relations of Soils Using 5.5 lb (2.5 kg) Rammer and 12 inch (304.8 mm) Drop (Standard proctor).

D 1556 Test for Density of Soil in Place by the Sand Cone Method.

D 1557 Test for Moisture-Density Relations of Soils using 10 lb (4.5 kg) Rammer and 18 inch (457 mm) Drop (Modified Proctor).

D 1559 Test method for Resistance to Plastic Flow of Bituminous Mixtures using Marshall Apparatus.

D 2167 Test for Density of Soil in Place by the Rubber Balloon Method.

D 2216 Laboratory Determination of Moisture Content of Soil.

D 2487 Classification of Soils for Engineering Purposes.

D 2922 Test for Density of Soil and Soil Aggregate in Place by Nuclear Methods (Shallow Depth).

D 3017 Test for Moisture Content of Soil and Soil Aggregate in Place by Nuclear Methods (Shallow Depth).

D 4318 Test for Plastic Limit, Liquid Limit, and Plasticity Index of Soils.

C 25 Chemical Analyses of Limestone, Quicklime and Hydrated Lime.

C 110 Physical Testing for Quicklime and Hydrated Lime, Wet Sieve Method.

C 618 Specifications for Fly Ash and Raw or Calcined Natural Pozzolan for Use as a Mineral Admixture in Portland Cement Concrete.

C 977 Quicklime and Hydrated Lime for Soil Stabilization.

B. American Association of State Highway and Transportation Officials (AASHTO) latest edition.

T 88 Mechanical Analyses of Soils.

1.4 QUALITY ASSURANCE

Independent testing laboratory selected and paid for by Contractor shall be retained to perform construction testing on filling operations and subgrade analysis as specified herein.

1.5 SUBMITTALS

A. Shop drawings or details pertaining to excavating and filling for pavement are not required unless otherwise shown on the drawings or specifications or if contrary procedures to the project documents are proposed.

B. Submit a sample of each type of off-site fill material that is to be used in backfilling in an air-tight, 10 lb. container for the testing laboratory or submit a gradation and certification of the aggregate material that is to be used to the testing laboratory for review.

C. Submit names, qualifications and resumes of independent testing laboratory and personnel. Laboratory personnel shall be licensed by the State of Massachusetts for those tasks, which they are to perform.

2.0 PRODUCTS

2.1 MATERIALS

A. Suitable Backfill Material: In roads, road shoulders, walkways and traveled ways, suitable material for trench backfill shall be the natural material excavated during the course of construction (on or off-site) but shall exclude debris, pieces of pavement, organic matters, top soil, all wet or soft muck, peat or clay, all excavated ledge material, and all rocks over six inches in largest dimension, or any material which, as determined by the Engineer, will not provide sufficient support or maintain the completed construction in a stable condition.

B. Gravel Subbase: Inert materials that are hard, durable stone and course sand, free from loam and clay, surface coatings and deleterious material, and complying with the gradation requirements of state specifications.

3.0 EXECUTION

3.1 PREPARATION

A. Identify all lines, elevations and grades necessary to construct pavements, curbs and gutters, bases, walkways and roadways as shown in the plans and specifications.

B. Carefully protect benchmarks, property corners, monuments or other reference points.

C. Locate and identify all site utilities that have previously been installed and may be in danger of damage by grading operations.

D. Locate and identify all existing utilities that are to remain and protect them from damage.

E. Over excavate and properly prepare areas of subgrade that are not capable of supporting the proposed systems. These areas are to be stabilized by using acceptable backfill materials placed and compacted as specified, filter fabrics and/or aggregate material.

3.2 EXCAVATION

A. Excavate roadway and pavement areas to line and grade as shown in the plans and specifications.

B. Unsuitable excavated material is to be disposed of in a manner and location that is acceptable to the Owner and local governing agencies.

C. Perform excavation using capable, well maintained equipment and methods acceptable to the Owner and the project document requirements.

3.3 FILLING

A. Areas exposed by excavation or stripping and on which subgrade preparations are to be performed shall be scarified to minimum depth of 8" and compacted to minimum of 95% of optimum density, in accordance with ASTM D 698 (or 92% of optimum density, in accordance with ASTM D 1557), at a moisture content of no less than 1% below and no more than 3% above the optimum moisture content. These areas shall then be proof rolled to detect any areas of insufficient compaction. Proof roll the exposed natural ground, above the groundwater elevation, by making at least four (4) passes with a vibratory drum roller having a minimum drum weight of at least 8,000 pounds, under the supervision and direction of a Soil Engineer. Areas observed to be weak or unstable during proof rolling shall be excavated and replaced with compacted structural fill or sand and gravel. If the subgrade becomes saturated prior to proof rolling, it shall be allowed to dry before proof rolling begins. Alternatively, the saturated soils may be removed to firm dry natural ground prior to proof rolling.

B. Fill materials used in preparation of subgrade shall be placed in lifts or layers not to exceed 6" loose measure and compacted to a minimum density of 95% of optimum density, in accordance with ASTM D 698, (or 92% of the optimum density, in accordance with ASTM D 1557) at a moisture content of no less than 1% below and no more than 3% above the optimum moisture content.

3.4 COMPACTION

A. Maintain optimum moisture content of fill materials to attain required compaction density.

B. An independent testing laboratory selected and paid by the Contractor, shall be retained to perform testing on-site.

C. Compaction tests will be performed at a rate of 1 per lift per 200 lf of trench pavement.

D. If compaction requirements are not complied with at any time during construction process, remove and recompact deficient areas until proper compaction is obtained at no additional expense to Owner.

3.5 MAINTENANCE OF SUBGRADES

A. Finished subgrades shall be verified to ensure proper elevation and conditions for construction above subgrade.

B. Protect subgrade from excessive wheel loading during construction including concrete trucks and dump trucks.

C. Remove areas of finished subgrade found to have insufficient compaction density to depth necessary and replace in a manner that will comply with compaction requirements by use of material equal to or better than best subgrade material on-site. Surface of subgrade after compaction shall be hard, uniform, smooth, stable, and true to grade and cross section.

3.6 ROCK EXCAVATION (See Section 31 23 16.26 Rock and Boulder Removal)

END OF SECTION

SECTION 31 23 16.13

EXCAVATION, BACKFILL AND COMPACTION FOR UTILITIES

1.0 GENERAL

1.1 SECTION INCLUDES

A. Excavating trenches for the installation of utilities.

B. Backfilling trench with bedding material as specified and indicated and finishing filling trench with suitable material to proposed subgrade.

C. Compacting backfill materials in an acceptable manner

1.2 RELATED SECTIONS

A. Section 31 23 16.26 - Rock and Boulder Removal

B. Section 33 11 13 - Water Distribution Systems

C. Section 33 40 00 – Storm Drainage Systems

D. Construction Drawings

1.3 REFERENCE STANDARDS

A. American Society for Testing and Materials (ASTM) Latest Edition.

D 422 Method for Particle Size Analysis.

D 698 Test for Moisture-Density Relations of Soils Using 5.5 lb. (2.5 kg) Rammer and 12-inch (304-9 mm) Drop (Standard Proctor).

D 1556 Test for Density of soil in Place by the Sand Cone Method.

D 1557 Test for Moisture-Density Relations of Soils Using 10-lb (4.5 kg) Rammer and 18-inch (457 mm) Drop (Modified Proctor).

D 1559 Test Method for Resistance to Plastic Flow of Bituminous Mixtures Using Marshall Apparatus.

D 2216 Laboratory Determination of Moisture Content of Soil.

D 2487 Classification of Soils for Engineering Purposes.

D 2922 Tests for Density of Soil and Soil-Aggregate in Place by Nuclear Methods (Shallow Depth).

D 3017 Test for Moisture Content of Soil and Soil-Aggregate in Place by Nuclear Methods (Shallow Depth).

D 4318 Test for Plastic Limit, Liquid Limit, & Plasticity Index of Soils.

C 25 Chemical Analysis of Limestone, Quicklime and Hydrated Lime.

C 110 Physical Testing for Quicklime and Hydrated Lime, Wet Sieve Method.

C 618 Specifications for Fly Ash and Raw or Calcined Natural Pozzolan for Use as a Mineral Admixture in Portland Cement Concrete.

C 977 Quicklime and Hydrated Lime for Soil stabilization.

A. American Association of State Highway and Transportation Officials (AASHTO) latest edition.

T 88 Mechanical Analysis of Soils.

1.4 QUALITY ASSURANCE

Independent testing laboratory selected and paid by the Contractor shall be retained to perform construction testing on filling operations and subgrade analysis as specified herein.

1.5 SUBMITTALS

A. Submit shop Drawings or details pertaining to all Site Utilities including materials, methods, equipment, and procedures in accordance with the requirements of the Drawings and these specifications. Do not perform work until required shop drawings have been accepted by Engineer.

B. The Contractor shall contact all utility companies and determine if additional easements will be required to complete the project. Contractor shall provide written confirmation of the status of <u>all</u> easements to the Owner at the time of the preconstruction conference or no later than ninety (90) days prior to the project possession date.

C. Submit a sample of each type of offsite fill material that is to be used in backfilling in an air tight, 10 lb container for the testing laboratory or submit a gradation and certification of the aggregate material that is to be given to the testing laboratory for review.

D. Submit names, qualifications and resumes of independent testing laboratory and personnel. Laboratory personnel shall be licensed by the State of Massachusetts for those tasks, which they are to perform.

1.6 PROJECT RECORD DOCUMENTS

Accurately record actual locations of all subsurface utilities, structures and obstructions encountered.

2.0 PRODUCT

2.1 MATERIALS

A. All backfill materials shall conform to the materials specifications as defined by MassDOT.

B. Suitable Backfill Material: In roads, road shoulders, walkways and traveled ways, suitable material for trench backfill shall be the natural material excavated during the course of construction (on or off-site) but shall exclude debris, pieces of pavement, organic matters, top soil, all wet or soft muck, peat or clay, all excavated ledge material, and all rocks over six inches in largest dimension, or any material which, as determined by the Engineer, will not provide sufficient support or maintain the completed construction in a stable condition.

3.0 EXECUTION

3.1 PREPARATION

A. Maintain in operating condition existing utilities and drainage systems encountered in utility installation. Repair any surface or subsurface improvements shown on Drawings.

B. Verify location, size, elevation, and other pertinent data required to make connections to existing utilities as indicated on Drawings. Contractor shall comply with local codes and regulations.

C. Over excavate and properly prepare areas of subgrade that are not capable of supporting the proposed systems. These areas are to be stabilized by using suitable materials or selected materials placed and compacted as specified, filter fabrics and/or additional bedding material.

D. Install dewatering systems that will be required to construct the proposed utilities in a manner that is described herein.

3.2 EXCAVATION

A. The local utility companies shall be contacted before excavation shall begin. Dig trench at proper width and depth for laying pipe, conduit, or cable. Cut trench banks practically and remove stones as necessary to avoid point-bearing. Over excavate wet or unstable soil, if encountered, from trench bottom as necessary to provide suitable base for continuous and uniform bedding.

B. All trench excavation side walls greater than 4 feet in depth shall be sloped, shored, sheeted, braced or otherwise supported by means of the sufficient strength to protect the workmen within them in accordance with the applicable rules and regulations established for construction by the Department of Labor, Occupational Safety and Health Administration (OSHA), and by local ordinances. Lateral travel distance to an exist ladder or steps shall not be greater than 25 feet in trenches 4 feet or deeper.

C. Perform excavation as indicated for specified depths. During excavations stockpile materials suitable for backfilling in orderly manner far enough from bank of trench to avoid overloading, slides, or cave-ins.

D. Remove excavated materials not required or not suitable for backfill or embankments and waste as specified. Any structures discovered during excavation(s) shall be disposed of a specified.

E. Prevent surface water from flowing into trenches or other excavations by temporary grading or other methods, as required. Remove accumulated water in trenches or other excavations by pumping or other acceptable methods.

F. Open cut excavation with trenching machine or backhoe. Do not use clods for backfill. Dispose of unsuitable material and provide other suitable material at no additional cost to Owner.

G. Accurately grade trench bottom to provide uniform bearing and support for each section of pipe on bedding material at every point along entire length, except where necessary to excavate for bell holes, proper sealing of pipe joints, or other required connections. Dig bell holes and depressions for joints after trench bottom has been graded. Dig no deeper, longer, or wider than needed to make joint connection properly.

H. Trench width requirements below the top of the pipe shall not be less than 12” nor more than 18” wider than outside surface of any pipe or conduit that is not to be installed to designated elevations and grades. All other trench width requirements for pipe, conduit, or cable shall be least practical width that will allow for proper compaction of trench backfill.

I. Trench depth requirements measured from finished grade or paved surface shall meet the following requirements or applicable codes and ordinances:

1. Water Mains: 54" to top of pipe barrel or 6" below the frost line (established by the local building official), whichever is deeper.

3.3 SHORING, SHEETING AND BRACING

A. Provide shoring, sheeting, and/or bracing of excavations as required to assure complete safety against collapse of the earth at the side of excavations. Alternatively, lay back excavations to a stable slope

B. Comply with local safety regulations and/or in the absence thereof with the provisions of the Occupational Safety and Health Act (OSHA).

C. Remove sheeting and shoring, etc., as backfilling operations progress, taking all necessary precautions to prevent collapse of excavation sides. Where sheeting is required to be left in place, as determined by the Engineer, additional payment will not be made to the Contractor.

D. Contractor shall use extra care when compacting adjacent to walls. Where walls are buried on both sides, backfill and compaction shall proceed on both sides of the wall so that the difference in top of fill level on either side of the wall shall not exceed two feet (2') at any stage of construction. Where backfill of buried wall is only on one side, only hand operated roller or plate compactors shall be used within a lateral distance of five feet (5') of back of wall for walls less than fifteen feet (15') high and with ten feet (10') of back of wall for walls more than fifteen feet (15') high.

3.4 PIPE BEDDING

Accurately cut trenches for pipe or conduit that is installed to designated elevations and grades to line and grade from 6" below bottom of pipe and to width as specified. Place 6" of bedding material, compact in bottom of trench, and accurately shape to conform to lower portion of pipe barrel. After pipe installation, place 12" bank gravel and compact in maximum 6" layers measured loose over the pipe.

3.5 BACKFILLING

A. Criteria: Trenches shall not be completely backfilled and joints shall be left exposed until required tests are performed and the utility systems comply with and are accepted by applicable governing authorities. Backfill trenches as specified. If improperly backfilled, reopen to depth required to obtain proper compaction. Backfill and compact, as specified, to properly correct condition in an acceptable manner.

B. Backfilling: After pipe or conduit has been installed, bedded, and tested as specified backfill trench or structure excavation with specified material placed in 12” maximum loose lifts.

C. Backfill trenches to the contours and elevations shown on the plans with unfrozen materials.

D. Systematically backfill to allow maximum time for natural settlement. Do not backfill over porous, wet, frozen or spongy subgrade surfaces.

3.6 COMPACTION

A. Exercise proper caution when compacting immediately over top of pipes or conduits. Water jetting or flooding is not permitted as method of compaction.

B. Maintain optimum moisture content of fill materials to attain required compaction density.

C. An independent testing laboratory (retained by the Contractor) shall perform tests at intervals not exceeding 200’-0” of trench for each lift of compacted trench backfill and furnish copies of test results as specified. Compact to minimum density of 95% of optimum density in accordance with ASTM D 698 (or 92% of optimum density in accordance with ASTM D1557).

3.7 ROCK EXCAVATION

(See Section 31 23 16.26 Rock and Boulder Removal).

END OF SECTION

SECTION 31 23 16.16

EXCAVATION, BACKFILL AND COMPACTION FOR STRUCTURES

1.0 GENERAL

1.1 SECTION INCLUDES

A. Excavation to line, grade and configuration as shown on Construction Drawings for proposed structures and future expansion areas.

B. Fill to line, grade and configuration as shown on Construction Drawings for proposed structures and future expansion areas.

C. Compacting for materials in acceptable manner as specified herein.

1.2 RELATED SECTIONS

A. Section 31 20 00 – Earth Moving

B. Section 31 23 16.26 - Rock and Boulder Removal

C. Section 31 32 00 – Soil Stabilization

D. Construction Drawings

1.3 REFERENCE STANDARDS

See Section 31 20 00 – Earth Moving

1.4 QUALITY ASSURANCE

An independent testing laboratory selected and paid by Contractor, shall be retained to perform construction testing on filling operations and subgrade analysis 1.

1.5 SUBMITTALS

A. Shop drawings or details pertaining to excavating and filling for structures are not required unless otherwise shown on Construction Drawings or if contrary procedures to Contract Documents are proposed.

B. Submit 50-pound sample of each type of fill material that is to be used in backfilling in air-tight container(s) to the independent testing laboratory or submit gradation and certification of aggregate material that is to be used at the site to the independent testing laboratory for review.

2.0 PRODUCTS

2.1 MATERIALS

A. All backfill materials shall conform to the materials specifications as defined by MassDOT.

B. Suitable Backfill Material: In roads, road shoulders, walkways and traveled ways, suitable material for trench backfill shall be the natural material excavated during the course of construction (on or off-site) but shall exclude debris, pieces of pavement, organic matters, top soil, all wet or soft muck, peat or clay, all excavated ledge material, and all rocks over six inches in largest dimension, or any material which, as determined by the Engineer, will not provide sufficient support or maintain the completed construction in a stable condition.

2.2 EQUIPMENT

Transport off-site materials to the project using well maintained and operating vehicles. Once on site, transporting vehicles shall stay on designated haul roads and shall at no time endanger improvements by rutting, overloading or pumping.

3.0 EXECUTION

3.1 PREPARATION

A. Identify lines, elevations and grades necessary to construct building subgrades as shown on Construction Drawings.

B. Protect benchmarks, property corners and other survey monuments from damage or displacement. If marker needs to be removed, it shall be referenced by licensed land surveyor and replaced, as necessary, by same.

C. Locate and identify utilities that have previously been installed and protect from damage.

D. Locate and identify existing utilities that are to remain and protect from damage.

E. Over excavate and properly prepare areas of subgrade that are not capable of supporting proposed structures. Stabilize these areas by using acceptable geotextile fabrics or aggregate materials placed and compacted as specified in Section 31 32 00 – Soil Stabilization.

3.2 EXCAVATION

A. Excavate building areas to line and grade as shown on Construction Drawings being careful not to over excavate beyond elevations needed for building subgrades.

B. Place suitable excavated material into project fill areas as specified in Section 31 00 00.

C. Unsuitable excavated material is to be disposed of in manner and location that is acceptable to Owner and local governing agencies.

D. Perform excavation using capable, well maintained equipment and methods acceptable to Owner and local governing agencies.

3.3 FILLING AND SUBGRADE PREPARATION

A. Building area subgrade pads shall be that portion of site directly beneath and 10-feet beyond building and appurtenances, including limits of future building expansion areas as shown on Construction Drawings.

B. Prepare building area subgrade pad to elevation as shown on the Construction Drawings. Proof roll subgrade prior to placing surcharge. Rock larger than 18 inches shall not be part of building subgrade fill.

C. Areas exposed by excavation or stripping and on which building subgrade preparations are to be performed shall be scarified to a minimum depth of 8 inches and compacted to minimum of 95 percent of optimum density in accordance with ASTM D 1557 at moisture content of not less than 1 percent below and not more than 3 percent above optimum moisture content. Proof roll these areas to detect areas of insufficient compaction. Accomplish proof rolling for all soils except shot rock by making a minimum of 2 complete passes with a fully loaded tandem axle dump truck, or approved equal in each of 2 perpendicular directions while under supervision and direction of the independent testing laboratory. Accomplish proof rolling for shot rock using a large (7 to 10 ton) vibratory roller. Excavate and recompact areas of failure as specified herein. Continual failure areas shall be stabilized in accordance with Section 31 32 00 at no additional cost to Owner.

D. Place shot rock fill used in preparation of subgrade in lifts or layers not to exceed 24 inches loose measure and compacted to a minimum density of 95 percent of optimum density in accordance with ASTM D 1557 at moisture content of not less than 1 percent below and not more than 3 percent above optimum moisture content.

E. Temporary sheeting or shoring is the responsibility of the Contractor.

3.4 COMPACTION

A. Maintain optimum moisture content as specified above of fill materials to attain required compaction density.

B. Test materials in accordance with Section 31 00 00.

C. Corrective measures fore non-complying compaction: Remove and recompact deficient areas until proper compaction is obtained at no additional expense to Owner.

3.5 MAINTENANCE OF SUBGRADE

A. Verify finished subgrades to ensure proper elevation and conditions for construction above subgrade.

B. Protect subgrade from excessive wheel loading during construction, including concrete trucks, dump trucks and other construction equipment.

C. Remove areas of finished subgrade found to have insufficient compaction density to depth necessary and replace in manner that will comply with compaction requirements by sue of materials equal to or better than best subgrade material on site. Surface of subgrade after compaction shall be hard, uniform, smooth, stable and true to grade and cross-section.

3.6 FINISH GRADING

A. Finish grading shall be in accordance with Section 31 00 00 and as more specifically specified herein.

B. Check grading of building subgrades by string line from grade stakes set at not more than 50-foot centers. Tolerance of 0.10 feet, more or less, will be permitted. Contractor to provide engineering and field staking necessary for verification of lines, grades and elevations.

END OF SECTION

SECTION 31 23 16.26

ROCK & BOULDER REMOVAL

1.0 GENERAL

1.1 SECTION INCLUDES

A. Removal of identified and discovered rock and boulders during excavation.

B. Use of Explosives to assist rock removal is prohibited.

1.2 RELATED SECTIONS

A. Section 31 23 16.13 - Excavation, Backfill and Compaction for Utilities.

B. Section 31 23 16.16 - Excavation, Backfill and Compaction for Structures.

C. Construction Drawings.

1.3 ENVIRONMENTAL REQUIREMENTS

Determine all environmental effects associated with proposed work and safeguard those concerns as regulated by law and all others by law and all other by reasonable and practiced methods.

1.4 JOB CONDITIONS

Any discrepancy with plans and specifications regarding amount and type of rock to be removed shall immediately be brought to the attention of the Engineer. A revised removal plan and schedule shall subsequently be provided and followed by the Contractor.

2.0 EXECUTION

2.1 PREPARATION

A. Verify site conditions and note subsurface conditions affecting work of this section.

B. Identify required lines, levels and elevations that will determine the extent of the proposed removals.

2.2 ROCK EXCAVATION

A. Rock Excavation - definition - Igneous, metamorphic or sedimentary rock that may be removed by rippers or mechanical methods. Cut rock to form level bearing at bottom of trench. In utility trenches, excavate to 6" below invert elevation of pipe. Remove shelled layers to provide sound and unshattered base. Remove unsuitable materials from site.

B. Remove rock to limit as indicated. Remove loose or shattered rock, overhanging ledges and boulders which might dislodge.

C. Use lean concrete or suitable materials to replace rock over excavation in building area and in expansion area to facilitate placement of utilities and future footings.

END OF SECTION

SECTION 31 32 00

SOIL STABILIZATION

1.0 GENERAL

1.1 DESCRIPTION OF WORK

A. This section describes the requirements necessary to conduct the following work.

1. Lime or Electrochemically Stabilized Subgrade
2. Cement Stabilized Subgrade
3. Fly Ash Stabilized Subgrade
4. Geotextile Fabric

1.2 RELATED SECTIONS AND DOCUMENTS

A. Section 31 01 10 – Site Preparation

B. Section 31 20 00 – Earth Moving

C. Construction Drawings.

1.3 SUBMITTALS / PROJECT RECORD DOCUMENTS

A. Submit a sample of each material to be used in a 10-pounds airtight container to the testing laboratory.

B. Submit the name of each materials supplier, the specific type, and source of each material. Any change in source throughout this work requires approval of the Engineer.

C. Submit the mix design and materials mix ratio that will achieve the specified requirements for soil stabilization according to Federal, State, and local agencies.

D. Test Reports. Submit certified reports for test(s) required.

E. Provide all submittals necessary to conform with the requirements of this Specification and as detailed on the Construction Drawings.

1.4 REGULATORY REQUIREMENTS

A. Authorities. Notify authority/utility owner prior to connecting new work to existing facilities.

B. The Contractor shall maintain access for vehicular and pedestrian traffic as required for site operations and other construction activities. Utilize temporary

striping, flagmen, barricades, warning signs, and warning lights as required and any other applicable work as required by the Massachusetts Department of Transportation and/or local agencies. Do not close or obstruct roadways, sidewalks, entrances/exits, hydrants, or any utilities without permits.

C. Follow the applicable safety standards and guidelines as established by OSHA and other applicable local, State, and Federal governing agencies.

D. Contact DigSafe (888-344-7233) 72 hours prior to commencing any excavation.

1.5 REFERENCES / STANDARDS

A. American Society for Testing and Materials (ASTM) latest edition.

1. ASTM C150 Portland Cement
2. ASTM C618 Coal Fly Ash and Raw or Calcined Natural Pozzolan for Use as a Mineral Admixture in Concrete.
3. ASTM C977 Stabilization Ability of Lime.
4. ASTM D1633 Compressive Strength of Molded Soil-Cement Cylinders.
5. ASTM D698 Laboratory Compaction Characteristics of Soil using Standard Effort.
6. ASTM D1557 Laboratory Compaction Characteristics of Soil using Modified Effort.

B. American Association of State Highway and Transportation Officials (AASHTO) latest edition.
M216 Lime for Soil Stabilization

C. National Lime Association (NLA) latest edition.
Bulletin 326 Lime Stabilization Construction Manual

1.6 JOB CONDITIONS

A. Conditions existing at time of inspection for bidding purposes will be maintained by Owner in so far as practical.

B. Variations to conditions or discrepancy in actual conditions as they apply to site preparation operations are to be brought to the attention of the Owner prior to the commencement of any site work.

C. Structures to be demolished will be discontinued in use and vacated prior to start of work.

D. Owner assumes no responsibility for the condition of structures to be demolished.

1.7 ENVIRONMENTAL REQUIREMENTS

A. Do not mix materials in wind in excess of 10 mph or when temperature is below 40° F.

B. Conform to applicable regulatory procedures when discovering hazardous, special, or contaminated materials.

C. Comply with governing regulations pertaining to environmental protection.

D. Acquire all necessary permits, licenses, and/or certificates as required by local, State, and/or Federal agencies prior to the start of the work and thereafter as appropriate.

E. The Contractor shall remove and dispose all waste materials generated during this work, including waste paints and other related compounds/chemicals. All waste products shall be disposed according to all applicable Federal, Sate, and local governing agencies.

F. Any waste classified as a hazardous or toxic waste shall be properly disposed in the appropriate manner to a licensed hazardous waste disposal facility. Verification of proper disposal shall be submitted upon completion of the project.

1.8 DELIVERY, STORAGE AND HANDLING

A. Deliver materials and products, and store and handle in strict compliance with manufacturer's instructions and recommendations and applicable governing agencies. Protect from all possible damage.

B. Sequence deliveries to avoid and minimize on-site storage.

C. Materials shall be stored in areas designated by the Engineer and in a manner that is safe since the facility may still be in use during construction.

1.9 QUALITY ASSURANCE / QUALITY CONTROL

Perform work in accordance with Federal, State, and local standards in conjunction with requirements specified herein and on the Construction Drawings.

2.0 PRODUCTS

2.1 MATERIALS

A. Lime or Electrochemical Additive.

B. Portland Cement.

C. Fly Ash.

D. Coarse Aggregate.

E. Fine Aggregate.

F. Subsoil-Existing Reused.

G. Geotextile Fabric for Stabilization.

H. Mirafi 500X or 600X, or approved equivalent.

1. Phillips 66 Supac 6WS
2. Dupont Typar 3401 and 3601
3. Trevira S1114 and S1120
4. Tensar SS-1 and SS-2
5. Exxon GTF-200 or 350

I. The Contractor shall provide all tools, materials, equipment, and supplies necessary to conduct the work fully to meet the requirements of this Section as detailed on the Construction Drawings.

2.2 MIX DESIGN AND TESTING

A. The Contractor shall utilize equipment capable of excavating subsoil, mixing and placing materials, wetting, or consolidation, and compaction of material.

B. The Contractor shall conduct all applicable mix design and testing work in order to conform to these and State Specifications and the Construction Drawings.

C. Contractor must obtain approval from Geotechnical Engineer.

2.3 CONFIGURATION

The Contractor shall conduct the work in accordance with the details shown on the Construction Drawings and these Specifications.

3.0 EXECUTION

3.1 EXAMINATION

The Contractor shall visit the site prior to submitting the bid for work specified herein and on the Construction Drawings and become familiar with existing site conditions. The Contractor shall evaluate the potential access difficulties and provide all necessary equipment and precautions to comply with the requirements of the Specification. Failure to fully investigate the site conditions shall not relieve the Contractor of the responsibility

to adhere to the requirements of this Specification. The Engineer and Owner assume no responsibility for information or opinions concerning site conditions not specifically stated in writing. The site location and specific site features are shown on the Construction Drawings.

3.2 PREPARATION

A. Obtain Engineer's approval of the mix design and testing requirements before proceeding with the placement.

B. Do not start stabilization without weather and soil conditions being favorable for the successful application of the proposed material.

C. Proof roll subgrade to identify areas in need of stabilization.

3.3 INSTALLATION/CONSTRUCTION/DEMOLITION

A. Excavation

1. Excavate subsoil to a depth sufficient to accommodate soil stabilization.
2. Remove lumped subsoil, boulders, and rock that interfere with achieving uniform subsoil conditions.

B. Soil Treatment and Backfilling

1. Lime Stabilized Subgrade. Where indicated on the Construction Drawings, treat prepared subgrade with hydrated lime in accordance with applicable Massachusetts Department of Transportation specifications. Compact to not less than 95% of optimum density as determined by ASTM D698 (or 92% of the optimum density, in accordance with ASTM D1557).
2. Cement Stabilized Subgrade. Where indicated on the Construction Drawings, treat prepared subgrade with Portland cement in accordance with applicable Massachusetts Department of Transportation Specifications. Compact to no less than 95% of optimum density as determined by ASTM D698 (or 92% of the optimum density, in accordance with ASTM D1557).
3. Fly Ash Stabilized Subgrade. Where indicated on the Construction Drawings, treat prepared subgrade with fly ash in accordance with applicable Massachusetts Department of Transportation specifications. Compact to not less than 95% of optimum density as determined by ASTM D698 (or 92% of the optimum density, in accordance with ASTM D1557).
4. Maintain optimum moisture of mix materials to attain required stabilization.
5. Finish surface with plus or minus 1 inch from required elevations.

C. Geotextile Fabric

1. Place fabric in those areas that are shown on the Construction Drawings or in those areas that need additional stabilization prior to the placement of the paving base course.
2. Place fabric specified in the Construction Drawings and these Specifications in accordance with the manufacturer's recommendations.

END OF SECTION

SECTION 31 50 00

EXCAVATION SUPPORT AND PROTECTION

1.0 GENERAL

1.1 RELATED DOCUMENTS

A. Drawings and general provisions of the Contract, including General and Supplementary Conditions and Division 01 Specification Sections, apply to this Section.

1.2 SUMMARY

A. Section includes temporary excavation support and protection systems.

B. Related Requirements:
1. Section 312000 "Earth Moving" for excavating and backfilling and for controlling surface-water runoff and ponding.

1.3 PREINSTALLATION MEETINGS

A. Preinstallation Conference: Conduct conference at project site.

1. Review available geotechnical data.
2. Review existing utilities and subsurface conditions.
3. Review coordination for interruption, shutoff, capping, and continuation of utility services.
4. Review proposed excavations.
5. Review proposed equipment.
6. Review monitoring of excavation support and protection system.
7. Review coordination with waterproofing.
8. Review abandonment or removal of excavation support and protection system.

1.4 ACTION SUBMITTALS

A. Product Data: For each type of product.

1. Include construction details, material descriptions, performance properties, and dimensions of individual components and profiles, and calculations for excavation support and protection system.

B. Shop Drawings: For excavation support and protection system, prepared by or under the supervision of a qualified professional engineer.

1. Include plans, elevations, sections, and details.
2. Show arrangement, locations, and details of soldier piles, piling, lagging, tiebacks, bracing, and other components of excavation support and protection system according to engineering design.
3. Indicate type and location of waterproofing.
4. Include a written plan for excavation support and protection, including sequence of construction of support and protection coordinated with progress of excavation.

1.5 INFORMATIONAL SUBMITTALS

A. Contractor Calculations: For excavation support and protection system. Include analysis data signed and sealed by the qualified professional engineer responsible for their preparation.

B. Existing Conditions: Using photographs, show existing conditions of adjacent construction and site improvements that might be misconstrued as damage caused by inadequate performance of excavation support and protection systems. Submit before Work begins.

C. Record Drawings: Identify locations and depths of capped utilities, abandoned-in-place support and protection systems, and other subsurface structural, electrical, or mechanical conditions.

1.6 FIELD CONDITIONS

A. Interruption of Existing Utilities: Do not interrupt any utility serving facilities occupied by Owner or others unless permitted under the following conditions and then only after arranging to provide temporary utility according to requirements indicated:

1. Notify the Town of Owner and Engineer no fewer than two business days in advance of proposed interruption of utility.
2. Do not proceed with interruption of utility without written permission.

B. Project-Site Information: Limited geotechnical information is available for this project. The contractor is required to verify the onsite conditions in the exact

locations necessary. Owner is not responsible for interpretations or conclusions drawn from the data.

1. Make additional test borings and conduct other exploratory operations necessary for excavation support and protection according to the performance requirements.

C. Survey Work: Engage a qualified land surveyor or professional engineer to survey adjacent existing buildings, structures, and site improvements; establish exact elevations at fixed points to act as benchmarks. Clearly identify benchmarks and record existing elevations.

2.0 PRODUCTS

2.1 PERFORMANCE REQUIREMENTS

A. Provide design, monitor, and maintain excavation support and protection system capable of supporting excavation sidewalls and of resisting earth and hydrostatic pressures and superimposed and construction loads.

1. Contractor Design: Design excavation support and protection system, including comprehensive engineering analysis by a qualified professional engineer.
2. Prevent surface water from entering excavations by grading, dikes, or other means.
3. Install excavation support and protection systems without damaging existing buildings, structures, and site improvements adjacent to excavation.
4. Continuously monitor vibrations, settlements, and movements to ensure stability of excavations and constructed slopes and to ensure that damage to permanent structures is prevented.

2.2 MATERIALS

A. General: Provide materials that are either new or in serviceable condition.

B. Structural Steel: ASTM A 36/A 36M, ASTM A 690/A 690M, or ASTM A 992/A 992M.

C. Steel Sheet Piling: ASTM A 328/A 328M, ASTM A 572/A 572M, or ASTM A 690/A 690M; with continuous interlocks.

D. Wood Lagging: Lumber, mixed hardwood, nominal rough thickness capable of shoring the excavation to which it is placed.

E. Cast-in-Place Concrete: ACI 301, of compressive strength required for application.

F. Reinforcing Bars: ASTM A 615/A 615M, Grade 60, deformed.

G. Tiebacks: Steel bars, ASTM A 722/A 722M.

H. Tiebacks: Steel strand, ASTM A 416/A 416M.

3.0 EXECUTION

3.1 PREPARATION

A. Protect structures, utilities, sidewalks, pavements, and other facilities from damage caused by settlement, lateral movement, undermining, washout, and other hazards that could develop during excavation support and protection system operations.

1. Shore, support, and protect utilities encountered.

B. Install excavation support and protection systems to ensure minimum interference with roads, streets, walks, and other adjacent occupied and used facilities.

1. Do not close or obstruct streets, walks, or other adjacent occupied or used facilities without permission from Owner and authorities having jurisdiction. Provide alternate routes around closed or obstructed traffic ways if required by authorities having jurisdiction.

C. Locate excavation support and protection systems clear of permanent construction so that construction and finishing of other work is not impeded.

3.2 SOLDIER PILES AND LAGGING

A. Install steel soldier piles before starting excavation. Extend soldier piles below excavation grade level to depths adequate to prevent lateral movement. Space soldier piles at regular intervals not to exceed allowable flexural strength of wood lagging. Accurately align exposed faces of flanges to vary not more than 2 inches from a horizontal line and not more than 1:120 out of vertical alignment.

B. Install wood lagging within flanges of soldier piles as excavation proceeds. Trim excavation as required to install lagging. Fill voids behind lagging with soil, and compact.

C. Install wales horizontally at locations indicated on Drawings and secure to soldier piles.

3.3 SHEET PILING

A. Before starting excavation, install one-piece sheet piling lengths and tightly interlock vertical edges to form a continuous barrier.

B. Accurately place the piling, using templates and guide frames unless otherwise recommended in writing by the sheet piling manufacturer. Limit vertical offset of adjacent sheet piling to 60 inches. Accurately align exposed faces of sheet piling to vary not more than 2 inches from a horizontal line and not more than 1:120 out of vertical alignment.

C. Cut tops of sheet piling to uniform elevation at top of excavation.

3.4 TIEBACKS

A. Drill, install, grout, and tension tiebacks.

B. Test load-carrying capacity of each tieback and replace and retest deficient tiebacks.

1. Have test loading observed by a qualified professional engineer responsible for design of excavation support and protection system.

C. Maintain tiebacks in place until permanent construction can withstand lateral earth and hydrostatic pressures.

3.5 BRACING

A. Bracing: Locate bracing to clear columns, floor framing construction, and other permanent work. If necessary to move brace, install new bracing before removing original brace.

1. Do not place bracing where it will be cast into or included in permanent concrete work unless otherwise approved by Engineer.
2. Install internal bracing if required to prevent spreading or distortion of braced frames.
3. Maintain bracing until structural elements are supported by other bracing or until permanent construction can withstand lateral earth and hydrostatic pressures.

3.6 FIELD QUALITY CONTROL

A. Survey-Work Benchmarks: Resurvey benchmarks as needed during installation of excavation support and protection systems, excavation progress, and for as long as excavation remains open. Maintain an accurate log of surveyed elevations and positions for comparison with original elevations and positions. Promptly notify Architect if changes in elevations or positions occur or if cracks, sags, or other damage is evident in adjacent construction.

B. Promptly correct detected bulges, breakage, or other evidence of movement to ensure that excavation support and protection system remains stable.

C. Promptly repair damages to adjacent facilities caused by installation or faulty performance of excavation support and protection systems.

3.7 REMOVAL AND REPAIRS

A. Remove excavation support and protection systems when construction has progressed sufficiently to support excavation and earth and hydrostatic pressures. Remove in stages to avoid disturbing underlying soils and rock or damaging structures, pavements, facilities, and utilities.

1. Remove excavation support and protection systems to a minimum depth of 48 inches below overlying construction and abandon remainder.
2. Fill voids immediately with approved backfill compacted to density specified in Section 312000.
3. Repair or replace, as approved by Architect, adjacent work damaged or displaced by removing excavation support and protection systems.

B. Leave excavation support and protection systems permanently in place.

END OF SECTION

SECTION 32 12 16

ASPHALT PAVING

1.0 GENERAL

1.1 RELATED DOCUMENTS

A. Drawings and general provisions of the Contract, including General and Supplementary Conditions, apply to this Section.

1.2 SUMMARY

A. Section Includes:
   1. Hot-mix asphalt paving.

B. Related Requirements:

   1. Section 31 20 00 - Earth Moving

1.3 PREINSTALLATION MEETINGS

A. Preinstallation Conference: Conduct conference at a location to be determined prior to construction

1. Review methods and procedures related to hot-mix asphalt paving including, but not limited to, the following:

a. Review proposed sources of paving materials, including capabilities and location of plant that will manufacture hot-mix asphalt.
b. Review requirements for protecting paving work, including restriction of traffic during installation period and for remainder of construction period.

1.4 ACTION SUBMITTALS

A. Product Data: For each type of product.

1. Include technical data and tested physical and performance properties.
2. Job-Mix Designs: Certification, by authorities having jurisdiction, of approval of each job mix proposed for the Work.
3. Job-Mix Designs: For each job mix proposed for the Work.

B. Samples for Verification: For the following product, in manufacturer's standard sizes unless otherwise indicated:

1. Paving Fabric: 12 by 12 inches minimum.

1.5 INFORMATIONAL SUBMITTALS

A. Qualification Data: For manufacturer and testing agency.

B. Material Certificates: For each paving material. Include statement that mixes containing recycled materials will perform equal to mixes produced from all new materials.

C. Material Test Reports: For each paving material, by a qualified testing agency.

D. Field quality-control reports.

1.6 QUALITY ASSURANCE

A. Manufacturer Qualifications: A paving-mix manufacturer registered with and approved by authorities having jurisdiction or the MASSDOT.

B. Testing Agency Qualifications: Qualified according to ASTM D 3666 for testing indicated.

C. Regulatory Requirements: Comply with materials, workmanship, and other applicable requirements of MASSDOT for asphalt paving work.

1. Measurement and payment provisions and safety program submittals included in standard specifications do not apply to this Section.

1.7 FIELD CONDITIONS

A. Environmental Limitations: Do not apply asphalt materials if subgrade is wet or excessively damp, if rain is imminent or expected before time required for adequate cure, or if the following conditions are not met:

1. Prime Coat: Minimum surface temperature of 60 deg F .
2. Tack Coat: Minimum surface temperature of 60 deg F .
3. Slurry Coat: Comply with weather limitations in ASTM D 3910.
4. Asphalt Base Course: Minimum surface temperature of 40 deg F and rising at time of placement.
5. Asphalt Surface Course: Minimum surface temperature of 60 deg F at time of placement.

2.0 PRODUCTS

2.1 PAVEMENT AND APPURTENANT WORK

A. General: All materials shall conform to the relevant MassDOT item specifications

3.0 EXECUTION

3.1 EXAMINATION

A. Verify that subgrade is dry and in suitable condition to begin paving.

B. Proof-roll subgrade below pavements with heavy pneumatic-tired equipment to identify soft pockets and areas of excess yielding. Do not proof-roll wet or saturated subgrades.

1. Completely proof-roll subgrade in one direction. Limit vehicle speed to 3 mph.
2. Proof roll with a loaded 10-wheel, tandem-axle dump truck weighing not less than 15 tons.
3. Excavate soft spots, unsatisfactory soils, and areas of excessive pumping or rutting, as determined by Engineer, and replace with compacted backfill or fill as directed.

C. Proceed with paving only after unsatisfactory conditions have been corrected.

3.2 PATCHING

A. Asphalt Pavement: Saw cut perimeter of patch and excavate existing pavement section to sound base. Excavate rectangular or trapezoidal patches, extending 12 inches into perimeter of adjacent sound pavement, unless otherwise indicated. Cut excavation faces vertically. Remove excavated material. Recompact existing unbound-aggregate base course to form new subgrade.

B. Portland Cement Concrete Pavement: Break cracked slabs and roll as required to reseat concrete pieces firmly.

1. Pump hot undersealing asphalt under rocking slab until slab is stabilized or, if necessary, crack slab into pieces and roll to reseat pieces firmly.
2. Remove disintegrated or badly cracked pavement. Excavate rectangular or trapezoidal patches, extending into perimeter of adjacent sound pavement, unless otherwise indicated. Cut excavation faces vertically. Re-compact existing unbound-aggregate base course to form new subgrade.

C. Tack Coat: Before placing patch material, apply tack coat uniformly to vertical asphalt surfaces abutting the patch. Apply at a rate of 0.07 gal./sq. yd.

1. Allow tack coat to cure undisturbed before applying hot-mix asphalt paving.
2. Avoid smearing or staining adjoining surfaces, appurtenances, and surroundings. Remove spillages and clean affected surfaces.

D. Placing Patch Material: Fill excavated pavement areas with hot-mix asphalt base mix for full thickness of patch and, while still hot, compact flush with adjacent surface.

E. Placing Patch Material: Partially fill excavated pavements with hot-mix asphalt base mix and, while still hot, compact. Cover asphalt base course with compacted, hot-mix surface layer finished flush with adjacent surfaces.

3.3 REPAIRS

A. Leveling Course: Install and compact leveling course consisting of hot-mix asphalt surface course to level sags and fill depressions deeper than 1 inch in existing pavements.

1. Install leveling wedges in compacted lifts not exceeding 3 inches thick.

B. Crack and Joint Filling: Remove existing joint filler material from cracks or joints to a depth of 1/4 inch.

1. Clean cracks and joints in existing hot-mix asphalt pavement.
2. Use emulsified-asphalt slurry to seal cracks and joints less than 1/4 inch wide. Fill flush with surface of existing pavement and remove excess.
3. Use hot-applied joint sealant to seal cracks and joints more than 1/4 inch wide. Fill flush with surface of existing pavement and remove excess.

3.4 SURFACE PREPARATION

A. General: Immediately before placing asphalt materials, remove loose and deleterious material from substrate surfaces. Ensure that prepared subgrade is ready to receive paving.

B. Herbicide Treatment: Apply herbicide according to manufacturer's recommended rates and written application instructions. Apply to dry, prepared subgrade or surface of compacted-aggregate base before applying paving materials.

1. Mix herbicide with prime coat if formulated by manufacturer for that purpose.

C. Cutback Prime Coat: Apply uniformly over surface of compacted unbound-aggregate base course at a rate of 0.15 to 0.50 gal./sq. yd. Apply enough material to penetrate and seal, but not flood, surface. Allow prime coat to cure.

1. If prime coat is not entirely absorbed within 24 hours after application, spread sand over surface to blot excess asphalt. Use enough sand to prevent pickup under traffic. Remove loose sand by sweeping before pavement is placed and after volatiles have evaporated.
2. Protect primed substrate from damage until ready to receive paving.

D. Emulsified Asphalt Prime Coat: Apply uniformly over surface of compacted unbound-aggregate base course at a rate of 0.10 to 0.30 gal./sq. yd. per inch depth. Apply enough material to penetrate and seal, but not flood, surface. Allow prime coat to cure.

1. If prime coat is not entirely absorbed within 24 hours after application, spread sand over surface to blot excess asphalt. Use enough sand to prevent pickup under traffic. Remove loose sand by sweeping before pavement is placed and after volatiles have evaporated.
2. Protect primed substrate from damage until ready to receive paving.

E. Tack Coat: Apply uniformly to surfaces of existing pavement at a rate of 0.05 to 0.15 gal./sq. yd.

1. Allow tack coat to cure undisturbed before applying hot-mix asphalt paving.
2. Avoid smearing or staining adjoining surfaces, appurtenances, and surroundings. Remove spillages and clean affected surfaces.

3.5 PLACING HOT-MIX ASPHALT

A. Machine place hot-mix asphalt on prepared surface, spread uniformly, and strike off. Place asphalt mix by hand in areas inaccessible to equipment in a manner that prevents segregation of mix. Place each course to required grade, cross section, and thickness when compacted.

1. Place hot-mix asphalt base course in number of lifts and thicknesses indicated.
2. Place hot-mix asphalt surface course in single lift.
3. Spread mix at a minimum temperature of 250 deg F.
4. Begin applying mix along centerline of crown for crowned sections and on high side of one-way slopes unless otherwise indicated.
5. Regulate paver machine speed to obtain smooth, continuous surface free of pulls and tears in asphalt-paving mat.

B. Place paving in consecutive strips not less than 10 feet wide unless infill edge strips of a lesser width are required.

1. After first strip has been placed and rolled, place succeeding strips and extend rolling to overlap previous strips. Overlap mix placement from strip to strip to ensure proper compaction of mix along longitudinal joints.
2. Complete a section of asphalt base course before placing asphalt surface course.

C. Promptly correct surface irregularities in paving course behind paver. Use suitable hand tools to remove excess material forming high spots. Fill depressions with hot-mix asphalt to prevent segregation of mix; use suitable hand tools to smooth surface.

3.6 JOINTS

A. Construct joints to ensure a continuous bond between adjoining paving sections. Construct joints free of depressions, with same texture and smoothness as other sections of hot-mix asphalt course.

1. Clean contact surfaces and apply tack coat to joints.

2. Offset longitudinal joints, in successive courses, a minimum of 6 inches.
3. Offset transverse joints, in successive courses, a minimum of 24 inches.
4. Construct transverse joints at each point where paver ends a day's work and resumes work at a subsequent time. Construct these joints as shown on Drawings. Compact joints as soon as hot-mix asphalt will bear roller weight without excessive displacement.
5. Compact asphalt at joints to a density within 2 percent of specified course density.

3.7 COMPACTION

A. General: Begin compaction as soon as placed hot-mix paving will bear roller weight without excessive displacement. Compact hot-mix paving with hot, hand tampers or with vibratory-plate compactors in areas inaccessible to rollers.

1. Complete compaction before mix temperature cools to 185 deg F.

B. Breakdown Rolling: Complete breakdown or initial rolling immediately after rolling joints and outside edge. Examine surface immediately after breakdown rolling for indicated crown, grade, and smoothness. Correct laydown and rolling operations to comply with requirements.

C. Intermediate Rolling: Begin intermediate rolling immediately after breakdown rolling while hot-mix asphalt is still hot enough to achieve specified density. Continue rolling until hot-mix asphalt course has been uniformly compacted to the following density:

1. Average Density: 96 percent of reference laboratory density according to ASTM D 6927 but not less than 94 percent or greater than 100 percent.
2. Average Density: 92 percent of reference maximum theoretical density according to ASTM D 2041, but not less than 90 percent or greater than 96 percent.

D. Finish Rolling: Finish roll paved surfaces to remove roller marks while hot-mix asphalt is still warm.

E. Edge Shaping: While surface is being compacted and finished, trim edges of pavement to proper alignment. Bevel edges while asphalt is still hot; compact thoroughly.

F. Repairs: Remove paved areas that are defective or contaminated with foreign materials and replace with fresh, hot-mix asphalt. Compact by rolling to specified density and surface smoothness.

G. Protection: After final rolling, do not permit vehicular traffic on pavement until it has cooled and hardened.

H. Erect barricades to protect paving from traffic until mixture has cooled enough not to become marked.

3.8 INSTALLATION TOLERANCES

A. Pavement Thickness: Compact each course to produce the thickness indicated within the following tolerances:

1. Intermediate Course: Plus or minus 1/2 inch.
2. Wearing/Surface Course: Plus 1/4 inch, no minus.

B. Pavement Surface Smoothness: Compact each course to produce a surface smoothness within the following tolerances as determined by using a 10-foot straightedge applied transversely or longitudinally to paved areas:

1. Intermediate Course: 1/4 inch
2. Wearing/Surface Course: 1/8 inch
3. Crowned Surfaces: Test with crowned template centered and at right angle to crown. Maximum allowable variance from template is 1/4 inch.

3.9 FIELD QUALITY CONTROL

A. Testing Agency: Engage a qualified testing agency to perform tests and inspections.

B. Thickness: In-place compacted thickness of hot-mix asphalt courses will be determined according to ASTM D 3549.

C. Surface Smoothness: Finished surface of each hot-mix asphalt course will be tested for compliance with smoothness tolerances.

D. Asphalt Traffic-Calming Devices: Finished height of traffic-calming devices above pavement will be measured for compliance with tolerances.

E. In-Place Density: Testing agency will take samples of uncompacted paving mixtures and compacted pavement according to ASTM D 979.

1. Reference maximum theoretical density will be determined by averaging results from four samples of hot-mix asphalt-paving mixture delivered daily to site, prepared according to ASTM D 2041, and compacted according to job-mix specifications.
2. In-place density of compacted pavement will be determined by testing core samples according to ASTM D 1188 or ASTM D 2726.

a. One core sample will be taken for every 1000 sq. yd. or less of installed pavement, with no fewer than three cores taken.
b. Field density of in-place compacted pavement may also be determined by nuclear method according to ASTM D 2950 and correlated with ASTM D 1188 or ASTM D 2726.

F. Replace and compact hot-mix asphalt where core tests were taken.

G. Remove and replace or install additional hot-mix asphalt where test results or measurements indicate that it does not comply with specified requirements.

3.10 WASTE HANDLING

A. General: Handle asphalt-paving waste according to approved waste management plan required in Section 017419 "Construction Waste Management and Disposal."

END OF SECTION

SECTION 32 17 23

PAVEMENT MARKINGS

1.0 GENERAL

1.1. RELATED DOCUMENTS

A. Drawings and general provisions of the Contract, including General and Supplementary Conditions, apply to this Section.

1.2. SUMMARY

A. Section includes painted markings applied to asphalt pavement.

1.3. PREINSTALLATION MEETINGS

A. Preinstallation Conference: Conduct conference at a location to be determined prior to construction

1. Review methods and procedures related to marking pavement including, but not limited to, the following:

a. Pavement aging period before application of pavement markings.
b. Review requirements for protecting pavement markings, including restriction of traffic during installation period.

1.4. ACTION SUBMITTALS

A. Product Data: For each type of product.

1. Include technical data and tested physical and performance properties.

B. Shop Drawings: For pavement markings.

1. Indicate pavement markings, colors, lane separations, defined parking spaces, and dimensions to adjacent work.
2. Indicate, with international symbol of accessibility, spaces allocated for people with disabilities.

C. Samples: For each exposed product and for each color and texture specified; on rigid backing, 8 inches square.

1.5. QUALITY ASSURANCE

A. Regulatory Requirements: Comply with materials, workmanship, and other applicable requirements of MASSDOT for pavement-marking work.

1. Measurement and payment provisions and safety program submittals included in standard specifications do not apply to this Section.

1.6. FIELD CONDITIONS

A. Environmental Limitations: Proceed with pavement marking only on clean, dry surfaces and at a minimum ambient or surface temperature of 55 deg F for water-based materials, and not exceeding 95 deg F.

2.0 PRODUCTS

2.1. MANUFACTURERS

A. Manufacturers: Subject to compliance with requirements, provide products by one of the following:

B. Basis-of-Design Product: Subject to compliance with requirements, provide product indicated or comparable product by one of the following:

1. Benjamin Moore & Co.
2. Sherwin-Williams Company (The).

2.2. PAVEMENT-MARKING PAINT

A. Pavement-Marking Paint: Latex, waterborne emulsion, lead and chromate free, ready mixed, complying with FS TT-P-1952, Type II, with drying time of less than three minutes.

1. Color: as indicated on contract drawings

B. Pavement-Marking Paint: MPI #97, latex traffic-marking paint.

1. Color: as indicated on contract drawings

C. VOC Content: Pavement markings used on building interior shall have a VOC content of 150 g/L or less.

3.0 EXECUTION

3.1. EXAMINATION

A. Verify that pavement is dry and in suitable condition to begin pavement marking according to manufacturer's written instructions.

B. Proceed with pavement marking only after unsatisfactory conditions have been corrected.

3.2. PAVEMENT MARKING

A. Do not apply pavement-marking paint until layout, colors, and placement have been verified with Engineer.

B. Allow paving to age for a minimum of 30 days before starting pavement marking.

C. Sweep and clean surface to eliminate loose material and dust.

D. Apply paint with mechanical equipment to produce pavement markings, of dimensions indicated, with uniform, straight edges. Apply at manufacturer's recommended rates to provide a minimum wet film thickness of 15 mils.

1. Apply graphic symbols and lettering with paint-resistant, die-cut stencils, firmly secured to pavement. Mask an extended area beyond edges of each stencil to prevent paint application beyond the stencil. Apply paint so that it cannot run beneath the stencil.
2. Broadcast glass beads uniformly into wet markings at a rate of 6 lb/gal.

3.3. PROTECTING AND CLEANING

A. Protect pavement markings from damage and wear during remainder of construction period.

B. Clean spillage and soiling from adjacent construction using cleaning agents and procedures recommended by manufacturer of affected construction.

END OF SECTION

SECTION 32 13 13

CONCRETE PAVING

1.0 GENERAL

1.1 SECTION INCLUDES:

A. Preparation and placement of Portland cement concrete walkways.

B. Preparation and placement of Portland cement concrete walkways and entrances.

1.2 RELATED SECTIONS

A. Section 31 23 13 - Excavation, Backfill, Compaction for Pavement

B. Section 32 16 00 – Curbs, Sidewalks, Islands and Ramps

C. Construction Drawings

1.3 REFERENCE STANDARDS

A. American Concrete Institute (ACI) latest edition

1. 211.1 Standard Practice for Selecting Proportions for Normal, Heavyweight, and Mass Concrete.
2. 304R Guide for Measuring, Mixing, Transporting, and Placing Concrete.
3. 305R Hot Weather Concreting.
4. 306R Standard Specification for Cold Weather Concreting.
5. 308 Standard Practice for Curing Concrete.

B. American Society for Testing and Materials (ASTM) latest edition

1. A185 Steel Welded Wire Fabric, Plain, for Concrete Reinforcement.
2. A615 Deformed and Plain Billet-Steel for Concrete Reinforcement.
3. C33 Concrete Aggregates.
4. C78 Method for Flexural Strength Concrete (Using Simple Beam with Third-point Loading).
5. C94 Ready-Mixed Concrete.
6. C143 Method for Slump of Hydraulic Cement Concrete.
7. C150 Portland Cement.

8. C171 Sheet Material for Curing Concrete.
9. C231 Air-Content of Freshly Mixed Concrete by the Pressure Method.
10. C260 Air-Entraining Admixtures for Concrete.

11. C309 Liquid Membrane-Forming Compounds for Curing Concrete.
12. C494 Chemical Admixtures for Concrete.
13. C920 Standard Specification for Elastomeric Joint Sealants.
14. D994 Preformed Expansion Joint Filler for Concrete (Bituminous).
15. D1751 Preformed Expansion Joint Fillers for Concrete Paving and Structural Construction (Nonextruding and Resilient Bituminous Types).
16. D2628 Preformed Polychloroprene Elastomeric Joint Seals for Concrete Pavements.

C. State Department of Transportation Standard Specifications

1.4 QUALITY ASSURANCE

A. Establish and maintain required lines and elevations.

B. Check surface areas at intervals necessary to eliminate ponding areas. Remove and replace unacceptable paving as directed by Owner.

1.5 SUBMITTALS

A. Submit materials certificate from materials producer and Contractor, certifying that materials comply with, or exceed, requirements specified herein to the Engineering Consultant of Record and the independent testing laboratory for review and approval and within 7 calendar days after receipt of Notice-to-Proceed, submit for approval, certified laboratory test data or manufacturers certificates and data for the following items:

1. Portland cement concrete mix.
2. Aggregate gradations.
3. Preformed expansion joint filler.
4. Field molded/poured sealant.
5. Dowel bars.
6. Expansion sleeves.
7. Tie bars.
8. Reinforcing steel bars.
9. Welded wire fabric.
10. Air entraining admixtures.
11. Water-reducing and set-retarding admixtures (if used).

1.6 PROJECT CONDITIONS

Maintain access for vehicular and pedestrian traffic as required for other construction activities. Utilize temporary striping, flagmen, barricades, warning signs, and warning lights as required.

2.0 PRODUCTS

2.1 MATERIALS

A. Forms: Steel, wood, or other suitable material of size and strength to resist movement during concrete placement and to retain horizontal and vertical alignment until removal. Use straight forms, free of distortion and defects. Use flexible spring steel forms or laminated boards to form radius bends as required. Coat forms with nonstaining type of coating that will not discolor or deface surface of concrete.

B. Welded Wire Mesh: Welded plain cold-drawn steel wire fabric, ASTM A 185. Furnish in flat sheets.

C. Reinforcing Bars: Deformed steel bars, ASTM A 615, Grade 60.

D. Portland Cement: Shall conform to ASTM C150, Type I

E. Joint Fillers: Resilient premolded bituminous impregnated fiberboard units complying with ASTM D994, D1751, D2628; FS HH-F-341, Type II, Class A or approved equal.

F. Joint Sealants: Conforming to ASTM C920, non-priming, pourable, self-leveling polyurethane. Acceptable sealants are Sonneborn “SL1”, Sonneborn "SL2", Sonneborn “Sonomeric 1”, Sonneborn “Sonomeric 2”, Mameco "Vulkem 245", or Woodmont Products "Chem-Caulk" or approved equal.

G. Aggregate: Shall conform to ASTM C33.

H. Water: Shall be clean and potable

I. Dowel Bars: Shall conform to ASTM A615, grade 60, and plain steel bars.

J. Air Entraining Mixture: Shall conform to ASTM C260 (Sika AER by Sika Corporation, Air Mix by the Euclid Chemical Corporation or approved equal).

K. Curing Compound: Shall conform to ASTM C309 (Hydrocide by Sonneborn of Rexnord Chemical Products, Inc., and Polyseal 4 in 1 by Chem Masters Corporation or approved equal.

L. Joint Backup Rods: Shall be CCEVA Rod 100 by E-Poxy Industrials, Inc., Sealtight BACKER ROPE by W.R. Meadows, Inc. or approved equal.

2.2 MIX DESIGN AND TESTING

A. Mix concrete and deliver in accordance with ASTM C94.

B. Design mix to produce normal weight concrete consisting of Portland cement, aggregate, water-reducing admixture, air-entraining admixture, and water to produce following properties:

1. Compressive Strength: 3,500 psi, minimum at 28 days, unless otherwise indicated on Construction Drawings.
2. Slump Range: 2”-4” for hand placed concrete, 1-1/4” to 3” for machine placed (slipform) concrete.
3. Air Entrainment: 5 to 8 percent.

3.0 EXECUTION

3.1 PREPARATION

A. Proof-roll prepared base material surface to check for unstable areas. Paving work shall begin only after unsuitable areas have been corrected and are ready to receive paving.

B. Remove loose material from compacted base material surface to produce firm, smooth surface immediately before placing concrete.

3.2 INSTALLATION

A. Form Construction

1. Set forms to required grades and lines, rigidly braced and secured.
2. Install sufficient quantity of forms to allow continuance of work and so that forms remain in place minimum of 24 hours after concrete placement.
3. Check completed formwork for grade and alignment to following tolerances:

   a. Top of forms not more than 1/8-inch in 10'-0"
   b. Vertical face on longitudinal axis, not more than 1/4-inch in 10'-0"

4. Clean forms after each use and coat with form release agent as often as required to ensure separation from concrete without damage.

B. Reinforcement: Fasten reinforcing bars or welded wire fabric (if required) accurately and securely in place with suitable supports and ties. Remove from

reinforcement all dirt, oil, loose mill scale, rust, and other substances that will prevent proper bonding of the concrete to the reinforcement.

C. Concrete Placement

1. Concrete may be mixed and placed when the air temperature in the shade and away from artificial heat is a minimum of 35 degrees F and rising. Hot and cold weather concreting shall be in accordance with ACI 305R and 306R, respectively.
2. Do not place concrete until base material and forms have been checked for line and grade. Moisten base material if required to provide uniform dampened condition at time concrete is placed. Concrete shall not be placed around manholes or other structures until they are at required finish elevation and alignment.
3. Place concrete using methods that prevent segregation of mix. Consolidate concrete along face of forms and adjacent to transverse joints with internal vibrator. Keep vibrator away from joint assemblies, reinforcement, or side forms. Consolidate with care to prevent dislocation of reinforcing, dowels, and joint devices.
4. Deposit and spread concrete in continuous operation between transverse joints, as far as possible. If interrupted for more than 1/2 hour, place construction joint.

D. Joint Construction: Construct expansion, weakened-plane control (contraction), and construction joints straight with face perpendicular to concrete surface. Construct transverse joints perpendicular to centerline, unless otherwise detailed.

1. Weakened-Plane Control or Contraction Joints: Provide joints at spacing of 15'-0" on centers, maximum each way. Construct control joints for depth equal to at least 1/4 of the concrete thickness, as follows:

   a. Form tooled joints in fresh concrete by grooving top with recommended tool and finishing edge with jointer.
   b. Form sawed joints using powered saws equipped with shatterproof abrasive or diamond-rimmed blades. Cut joints into hardened concrete as soon as surface will not be torn, abraded, or otherwise damaged by cutting action.

2. Construction Joints: Place construction joints at end of placements and at locations where placement operations are stopped for period of more than 1/2 hour, except where such placements terminate at expansion joints. Construct joints in accordance with standard details.
3. Transverse Expansion Joints: Locate expansion joints at maximum of 180'-0" on centers, maximum each way unless otherwise shown

on the Construction Drawings. Provide premolded joint filler for expansion joints abutting concrete curbs, catch basins, manholes, inlets, structures, sidewalks, and other fixed objects.

4. Butt Joints: For joints against existing pavement, place 16” long dowels eight inches into holes drilled into center of existing slab. Epoxy dowels into holes with approved epoxy compound. Place dowels prior to concrete placement for new concrete. Dowel spacing to be 24” on center unless otherwise shown on Construction Drawings. Saw joint and fill with joint sealer.

E. Joint Fillers: Extend joint fillers full-width and depth of joint, and not less than 1/2-inch or more than 1-inch below finished surface where joint sealer is indicated. Furnish joint fillers in 1-piece lengths for full width being placed, wherever possible. Where more than 1 length is required, lace or clip joint filler sections together.

F. Joint Sealants: Joints shall be sealed with approved exterior pavement joint sealants and shall be installed in accordance with manufacturer's recommendations.

3.3 CONCRETE FINISHING

A. After striking off and consolidating concrete, smooth surface by screening and floating. Adjust floating to compact surface and produce uniform texture. After floating, test surface for trueness with 10'-0" straightedge. Distribute concrete as required to remove surface irregularities and refloat repaired areas to provide continuous smooth finish.

B. Work edges of slabs and formed joints with edging tool, rounding edge to 1/2-inch radius. Eliminate tool marks on concrete surface. After completion of floating and toweling, when excess moisture or surface sheen has disappeared, complete surface finishing, as follows:

1. Inclined Slab Surfaces: Provide coarse, nonslip finish by scoring surface with stiff-bristled broom perpendicular to flow of traffic so as to produce regular corrugations not over 1/16 of an inch deep.
2. Paving: Provide coarse, nonslip finish by scoring surface with stiff-bristled broom perpendicular to flow of traffic so as to produce regular corrugations not over 1/16 of an inch deep.

C. Do not remove forms for 24 hours after concrete has been placed. After form removal, clean ends of joints and point up minor honeycombed areas. Remove and replace areas or sections with major defects, as directed by Owner.

D. Protect and cure finished concrete paving using acceptable moist-curing methods, more particularly described in "water-curing" section of ACI 308.

3.4 CLEANING AND ADJUSTING

A. Sweep concrete pavement and wash free of stains, discolorations, dirt, and other foreign material just prior to final inspection.

B. Protect concrete from damage until acceptance of work. Exclude traffic from pavement for at least 14 days after placement. When construction traffic is permitted, maintain pavement as clean as possible by removing surface stains and spillage of materials.

3.5 FIELD QUALITY CONTROL

The independent testing laboratory will randomly core pavement at minimum rate of 1 core per 20,000 sq. ft of pavement, with minimum of 3 cores from heavy-duty areas and 3 cores from light duty areas. Core will be tested for thickness and quality of aggregate distribution. Core holes shall be patched immediately with Portland cement concrete and shall be finished to provide level surface as specified herein.

END OF SECTION

SECTION 32 16 00

CURBS, SIDEWALKS, ISLANDS and RAMPS

1.0 GENERAL

1.1 DESCRIPTION OF WORK

A. Granite Curbs

B. Bituminous Concrete Paving

C. Construct curbs, sidewalks, islands, and ramps as detailed on the Construction Drawings and by the Engineer.

1.2 RELATED SECTIONS AND DOCUMENTS

A. Section 02 40 00 – Demolition

B. Section 31 01 10 - Site Preparation

C. Section 31 20 00 – Earth Moving

D. Section 31 25 00 - Slope Protection and Erosion Control

E. Section 32 12 16 - Asphalt Paving

F. Section 32 17 23 - Pavement Markings

G. Construction Drawings

1.3 SUBMITTALS / PROJECT RECORD DOCUMENTS

A. Submit complete information on aggregates and cement concrete materials and mixtures.

B. Submit information on proposed method of providing tactile treatment at wheelchair ramp surfaces, including manufacturer's information and samples of manufactured products.

1.4 REGULATORY REQUIREMENTS

A. Contractor shall maintain access for vehicular and pedestrian traffic as required for other site operations and construction activities. Utilize temporary striping, flagmen, barricades, warning signs, and warning lights as required and any other applicable work as required by the Massachusetts Department of Transportation

and/or local agencies. Do not close or obstruct roadways, sidewalks, entrances/exits, hydrants, or any utilities without permits.

B. Follow the applicable safety standards and guidelines as established by OSHA and other applicable local, State, and Federal governing agencies.

C. Contact DigSafe (888-344-7233) 72 hours prior to commencing any excavation.

1.5 REFERENCES

A. Follow the applicable safety standards and guidelines as established by OSHA and other applicable local, State, and Federal governing agencies.

B. Americans with Disabilities Act requirements, January 1992.

C. Follow the applicable standards and references, using the most updated version necessary to complete the work fully including but not limited to the following:

ACI 304	Recommended Practice for Measuring, Mixing, Transporting, and Placing Concrete.
ANSI/ASTM D1751	Preformed Expansion Joint Fillers for Concrete Paving and Structural Construction – Nonextruding and Resilient Bituminous Types.
ANSI/ASTM D1752	Preformed Expansion Joint Fillers for Concrete Paving and Structural Construction – Nonextruding and Resilient Nonbituminous Types.
ASTM C33	Concrete Aggregates.
ASTM C94	Ready-Mixed Concrete.
ASTM C150	Portland Cement.
ASTM C260	Air-Entraining Admixtures for Concrete.
ASTM C309	Liquid Membrane-Forming Compounds for Curing Concrete.
ASTM C494	Chemical Admixtures for Concrete.
FS TT-C-800	Curing Compound Concrete for New and Existing Surfaces.
ACI 308-81	(3.3.4,D)

AASHTO M153, Type 1 (2.1,E)

1.6 JOB CONDITIONS

A. Structures to be demolished will be discontinued in use and vacated prior to start of work.

B. The Owner assumes no responsibility for condition of structures to be demolished.

C. Conditions existing at time of inspection for bidding purposes will be maintained by Owner in so far as practicable. Variations within structures may occur by the Owner's removal and salvage operations prior to the start of the work.

1.7 ENVIRONMENTAL REQUIREMENTS

A. Conform to applicable regulatory procedures when discovering hazardous or contaminated materials.

B. Comply with governing regulations pertaining to environmental protection.

C. Any waste classified as a hazardous or toxic waste shall be disposed in the appropriate manner to a licensed hazardous waste disposal facility. Verification of proper disposal shall be submitted upon completion of the project.

D. Acquire all necessary permits, licenses, and/or certificates as required by local, State, and /or Federal agencies prior to the start of the work and thereafter as appropriate, at no additional cost to the Owner.

E. The Contractor shall remove and dispose all waste materials generated during this work, including waste paints and other related compounds/chemicals. All waste products shall be disposed according to all applicable Federal, State, and local governing agencies.

1.8 DELIVERY, STORAGE AND HANDLING

A. Explosives shall not be brought to the site or used without written consent of authorities having jurisdiction. Such written consent will not relieve Contractor of total responsibility for injury to persons or for damage to property due to blasting operations. The performance of any required blasting shall comply with governing regulations.

B. As specified herein, the Contractor shall manage, deliver, store, and handle all materials in accordance with manufacturer’s requirements and applicable governing agencies.

C. Items of salvageable value to the Contractor may be removed from the site. Storage or sale of removed items on the site will not be permitted and shall not interfere with any other work specified in the Contract documents. Sloped granite curbing found on site within the limits of work shall be reused on site.

1.9 QUALITY ASSURANCE / QUALITY CONTROL

A. The appropriate QA/QC measures shall apply throughout the entire work of this project.

B. Conform to the requirements of the 28-day strength testing for the 4,000 PSI concrete.

2.0 PRODUCTS

2.1 MATERIALS

A. The Contractor shall provide all tools, materials, equipment, and supplies necessary to conduct the work fully to meet the requirements of this Section as detailed on the Construction Drawings.

B. Forms. Steel, wood, or other suitable material of size and strength to resist movement during concrete placement and to retain horizontal and vertical alignment until removal. Use straight forms, free of distortion and defects. Use flexible spring steel forms or laminated boards to form radius bends as required. The forms shall be of a depth equal to the depth of curbing or sidewalk, and so designed as to permit secure fastening together at the tops. Coat forms with non-staining type coating that will not discolor or deface surface of concrete.

C. Concrete Materials. Comply with requirements of applicable Sections for concrete materials, admixtures, bonding materials, curing materials, and others as required.

D. Vertical Granite Curb. Provide vertical granite curbing within Town roadway layout.

E. Precast Concrete Curb, Cape Cod Berm. Provide curbing within site proper limits as shown on the construction documents.

F. Joint Fillers. Resilient pre-molded bituminous impregnated fiberboard units complying with ASTM D 1751 S HH-F-341, Type II, Class A, or AASHTO M 153, Type I.

G. Joint Sealers. Non-priming, pourable, self-leveling polyurethane. Acceptable sealants are Sonneborn “Sonolastic Paving Joint Sealant,” Sonneborn “Sonomeric CT 1 Sealant,” Sonneborn “Sonomeric CT 2 Sealant,” Mameco “Vulken 45,” or Woodmont Products “Chem-Caulk,” or equivalent.

H. Crushed Stone, Bark Mulch, and Loam. Provide crushed stone, bark mulch, and loam. Comply with the requirements of the applicable Sections for landscaping and as specified on the Construction Drawings.

I. Surface Treatment at Wheelchair Ramps. At locations indicated on the Construction Drawings, furnish and install detectable warning surface that meets the applicable requirements of the ADA.

2.2 MIX DESIGN AND TESTING

A. Design mix to produce normal weight concrete consisting of Portland cement, aggregate, water reducing admixture, air entraining admixture, and water to produce the following properties:

1. Compressive Strength. 4,000 PSI, minimum at 28 days, unless otherwise indicated on the Construction Drawings.
2. Slump Range. 3 to 5 inches for normal concrete.
3. Air Entrainment. 5% to 8%.

2.3 CONFIGURATION

A. Follow the details shown on the Construction Drawings for the new work of curbs, islands, ramps, and sidewalks.

3.0 EXECUTION

3.1 EXAMINATION

Contractor shall visit the site prior to submitting the bid for work specified herein and on the Construction Drawings and become familiar with existing site conditions. The Contractor shall evaluate the potential access difficulties and provide all necessary equipment and precautions to comply with the requirements of the Specification. Failure to fully investigate the site conditions shall not relieve the Contractor of the responsibility to adhere to the requirements of this Specification. The Engineer and Owner assume no responsibility for information or opinions concerning site conditions not specifically stated in writing. The site location and specific site features are shown on the Construction Drawings.

3.2 PREPARATION

A. Proof roll prepared base material surface to check for unstable areas. The paving or concrete work shall begin after any unsuitable areas have been corrected and are ready to receive work. Compaction testing for the base material shall be completed in accordance with Section 31 00 00 – Earthwork prior to the placement of the paving. The Construction Drawings show specific details for this work.

B. Surface Preparation. Remove loose material from compacted base material surface to produce a firm, smooth surface immediately before placing concrete.

C. Cement Concrete Sidewalks, Islands, and Wheelchair Ramps. Prepare subgrade and construct in strict compliance with the requirements of the Site Specifications, as modified by the applicable requirements of Sections and subsections of 31 00 00 and 03 30 00 of these Specifications.

D. Conduct operations with minimum interference to public or private accesses and facilities. Maintain access and egress at all times and clean or sweep any roadways daily or as required by the governing authority. At such times as deemed necessary by the Owner, dust control shall be provided with sprinkling systems or equipment provided by the Contractor.

E. Protect bench marks, property corners, and all other survey monuments from damage or displacement. If a marker needs to be removed it shall be referenced by a licensed land surveyor and replaced, as necessary, by the same.

F. Provide traffic control as required, in accordance with the U.S. Department of Transportation "Manual of Uniform Traffic Control Devices" and the Massachusetts Department of Transportation requirements.

3.3 INSTALLATION / CONSTRUCTION / DEMOLITION

A. Form Construction

1. Set forms to required grades and lines, and rigidly brace and secure.
2. Install sufficient quantity of forms to allow continuance of work so that forms remain in place a minimum of 24 hours after concrete placement.

3. Check completed form work for grade and alignment to following tolerances:

   a. To have forms vary from grade and alignment no more than 1/8-inch in 10.0 feet.
   b. Vertical face on longitudinal axis shall vary no more than 1/4-inch in 10.0 feet.

4. Clean forms after each use, and coat with form release agent as often as required to ensure separation from concrete without damage.

B. Concrete Placement

1. Comply with requirements of Section 03 30 53
2. Do not place concrete until base material and forms have been checked by the Contractor’s QA/QC representative for line and grade. Moisten base

material if required to provide uniform dampened condition at time concrete is placed. Concrete shall not be placed around manholes or other structures until they are at the required finish elevation and alignment.

3. Place concrete using methods that prevent segregation of mix. Consolidate concrete along face of forms and adjacent to transverse joints with internal vibrator. Keep vibrator away from joint assemblies, reinforcement, or side forms. Consolidate with care to prevent dislocation of dowels, and joint devices.
4. Deposit and spread concrete in continuous operation between transverse joints, to the extent practicable. If interrupted for more than 1/2 hour, place construction joint.
5. Tactile Surface Treatment at Wheelchair Ramps. Cast into new concrete ramps in strict accordance with manufacturer's instructions and recommendations. All tactile contact surfaces shall be free of hydrostatic pressure, paint, membranes, soils, or any other foreign materials that could impede performance.

C. Joint Construction

1. Contraction Joints. If joints are specified, the sidewalk shall be constructed in uniform sections of the length specified on the Construction Drawings. The joints between sections shall be formed either by: steel templates 1/8 inch in thickness, of a length equal to the width of the sidewalk, and with a depth which will penetrate at least two inches below the surface of the sidewalk; with 3/4-inch thick performed expansion joint filler cut to the exact cross section of the sidewalk; or by sawing to a depth of at least 2 inches while the concrete is between 4 and 24 hours old. If steel templates are used, they shall be left in place until the concrete has set sufficiently to hold its shape, but shall be removed while the forms are still in place.
2. Transverse Expansion Joints. Transverse expansion joint in the sidewalk shall have a filler cut to the exact cross section. The joints shall be similar to the type of expansion joint used in the adjacent pavement.
3. Joint Fillers. Extend joint fillers full width and depth of joint, and no less than ½ inch or more than 1 inch below the finished surface where joint sealer is indicated. If not joint sealer, place top of joint filler flush with finished concrete surface. Furnish joint fillers in one piece lengths for full width being placed, wherever possible. Where more than one length is required, lace or clip joint filler sections together.

D. Concrete Finishing

1. After striking off and consolidating concrete, smooth surface by screening and floating. Adjust floating to compacted surface and produce uniform texture. After floating, test surface for trueness with a 10.0-foot straight-edge. Distribute concrete as required to remove surface irregularities, and re-float repaired areas to provide continuous smooth finish.

2. Work edges of sidewalks, back top edge of integral curb, and formed joints with an edging tool, and round to ½-inch radius. Eliminate tool marks on concrete surface. After completion of floating and troweling when excess moisture or surface sheen has disappeared, complete surface finishing, as follows:

   a. *Inclined Slab Surfaces.* Provide coarse, non-slip finish by scoring surface with stiff bristled broom perpendicular to line of traffic.
   b. *Sidewalks.* Broom finish by drawing fine hair broom across surface perpendicular to line of traffic. Repeat operation as necessary to produce a fine line texture.

3. Do not remove forms for 24 hours after concrete has been placed. After form removal, clean ends of joints and point up any minor honeycombed areas. Remove and place areas or sections with major defects, as directed by the Engineer.
4. Protect and cure finished concrete paving using acceptable moist-curing methods, more particularly described in the "water curing" Section of ACI 308-81.

E. Curbings

1. General. This work shall consist of curbing constructed in conjunction with the prepared pavement and/or sidewalk in accordance with the dimensions and details shown on the Construction Drawings and in conformity with these Specifications.

2. All limits of pavement shall be curbed, unless otherwise stated.
3. Finishing. The top of the finished curb shall be true to line. The curb shall follow the contour of the pavement. The curb shall be free of humps and sags.

F. Backfill

1. After the concrete has set sufficiently, the spaces in front and back of the sidewalk shall be refilled to the required elevation with suitable material that shall be compacted until firm and solid, and neatly graded.

G. Cleaning Up and Adjusting

1. Sweep concrete pavement and wash free of stains, discolorations, dirt, and other foreign material just prior to final inspection.
2. Protect concrete from damage until acceptance of work. Exclude traffic from work area for an appropriate period of time after placement. When construction traffic is permitted, maintain clean as possible by removing surface stains and spillage of materials.

END OF SECTION

SECTION 32 22 26

ASPHALT BASE COURSE

1.0 GENERAL

1.1 DESCRIPTION OF WORK

Gravel Base, Full Depth Asphalt Base, Hot Mix Sand Asphalt Base, and Soil Cement Stabilized Base.

1.2 RELATED SECTIONS AND DOCUMENTS

A. Section 02 40 00 – Demolition

B. Section 31 01 10 – Site Preparation

C. Section 31 20 00 – Earth Moving

D. Section 32 12 16 – Asphalt Paving

E. Massachusetts Department of Transportation Standard Specifications

F. Construction Drawings

1.3 SUBMITTALS / PROJECT RECORD DOCUMENTS

The Contractor shall submit to the Owners Representative the following product data.

A. Material list of items proposed to be provided under this Section.

B. Manufacturer's specifications, catalog cuts, and other engineering data need to demonstrate compliance with the specified requirements.

C. Submit complete information on aggregates and cement concrete materials and mixtures, as specified in Section 03 30 53.

1.4 REGULATORY REQUIREMENTS

A. Conform to applicable local, State, and Federal codes for demolition of structures, safety of adjacent structures, dust control, and runoff control. Obtain required permits and licenses from authorities. Pay associated fees including disposal charges at no additional cost to the Owner.

B. Notify affected utility companies before starting work and comply with their requirements.

C. The Contractor shall maintain access for vehicular and pedestrian traffic as required for site operations and other construction activities. Utilize temporary striping, flagmen, barricades, warning signs, and warning lights as required and any other applicable work as required by the Massachusetts Department of Transportation and/or local agencies. Do not close or obstruct roadways, sidewalks, entrances/exits, hydrants, or any utilities without permits.

D. Contact DigSafe (888-344-7233) 72 hours prior to commencing any excavation.

1.5 REFERENCES / STANDARDS

A. Follow the applicable safety standards and guidelines as established by OSHA and other local, State, and Federal governing agencies.

B. Follow the applicable standards and procedures, using the most updated version, necessary to complete the work fully, including but not limited to the following:

1. ANSI/ASTM D698 Laboratory Compaction Characteristics of Soil using Standard Effort.
2. ANSI/ASTM D1557 Laboratory Compaction Characteristics of Soil using Modified Effort.
3. ASTM D2167 Density and Unit Weight of Soil in Place by the Rubber Balloon Method.
4. ASTM D1556 Density and Unit Weight of Soil in Place by the Sand-Cone Method.
5. ASTM D2922 Density of Soil and Soil-Aggregate in Place by Nuclear Methods (Shallow Depth), Direct Transmission.
6. ASTM D3017 Water Content of Soil and Rock in Place by Nuclear Methods (Shallow Depth).
7. ASTM D4318 Liquid Limit, Plastic Limit, and Plasticity Index of Soils.
8. AASHTO T88 Particle Size Analysis of Soils.

1.6 JOB CONDITIONS

Conditions existing at time of inspection for bidding purposes will be maintained by Owner in so far as practicable.

1.7 ENVIRONMENTAL REQUIREMENTS

A. Conform to applicable regulatory procedures when discovering hazardous, special, or contaminated materials.

B. Comply with governing regulations pertaining to environmental protection.

C. Acquire all necessary permits, licenses, and/or certificates as required by local, State, and/or Federal agencies prior to the start of the work and thereafter as appropriate, at no additional cost to the Owner.

D. The Contractor shall remove and dispose all waste materials generated during this work, including waste paints and other related compounds/chemicals. All waste products shall be disposed according to all applicable Federal, State, and local governing agencies.

E. Any waste classified as a hazardous or toxic waste shall be disposed in the appropriate manner to a licensed hazardous waste disposal facility. Verification of proper disposal shall be submitted upon completion of the project.

1.8 DELIVERY, STORAGE, AND HANDLING

A. Items of salvageable value to Contractor may be removed from the site. Storage or sale of removed items on the site will not be permitted and shall not interfere with any other work specified in the Contract documents.

B. Explosives shall not be brought to the site or used without written consent of authorities having jurisdiction. Such written consent will not relieve Contractor of total responsibility for injury to persons or for damage to property due to blasting operations. The performance of any required blasting shall comply with governing regulations.

C. As specified herein, the Contractor shall manage, deliver, store, and handle all materials in accordance with manufacturer's requirements and applicable governing agencies.

1.9 QUALITY ASSURANCE / QUALITY CONTROL

The appropriate QA/QC measures shall apply throughout the entire work of this project.

2.0 PRODUCTS

2.1 MATERIALS

Submit materials certificate which is signed by the material producer and Contractor to the designated independent testing laboratory certifying that materials comply with, or exceed, the requirements herein.

2.2 MIX DESIGN AND TESTING

A. An independent testing laboratory, selected and paid by the contractor, may be retained to perform construction testing of in-place base courses for compliance with requirements for thickness and tolerance. Paving base course tolerances

shall be verified (by rod and level readings) on no more than 50-foot centers to ± 0.05 feet of design elevations that allow for paving thicknesses as shown on the Construction Drawings. The Contractor shall provide instruments and a suitable benchmark.

B. The following tests may be performed at the Owner's discretion on each type of material used as base course material.

1. Moisture and Density Relationship. ASTM D698 and ASTM D1557
2. Particle Size Analysis of Soils. AASHTO T-88.
3. Plasticity Index. ASTM D4318.
4. Base Material Thickness. Perform one test for each 20,000 square feet of in-place base material area.
5. Base Material Compaction. Perform one test in each lift for each 20,000 square feet of in-place material area.
6. Test each source of base material for compliance with applicable State specifications.
7. Field density tests for in-place materials shall be performed according to one of the following standards as part of construction testing requirements.
8. Sand-Cone Method. ASTM D1557.
9. Balloon Method. ASTM D2167.
10. Nuclear Method. ASTM D2922, Direct Transmission.

C. The independent testing laboratory shall prepare test reports that indicate the test location, elevation data, and test results. The Owner, Engineer, and Contractor shall be provided with copies of the reports within 96 hours of the time the test was performed. If any test performed fails to meet the applicable Specifications, the Owner and Contractor shall be notified immediately by the independent testing laboratory. The Owner reserves the right to employ the independent testing laboratory and to direct any testing that is deemed by them to be necessary. The Contractor shall provide safe and unlimited access to the site for testing activities.

2.3 CONFIGURATION

The Contractor shall follow the details shown on the Construction Drawings and as specified herein, unless otherwise stated or shown.

3.0 EXECUTION

3.1 EXAMINATION

A. Verify substrate has been inspected and that gradients and elevations are correct and dry.

B. The Contractor shall visit the site prior to submitting the bid for work specified herein and on the Construction Drawings and become familiar with existing site conditions. The Contractor shall evaluate the potential access difficulties and provide all necessary equipment and precautions to comply with the requirements of the Specification. Failure to fully investigate the site conditions shall not relieve the Contractor of the responsibility to adhere to the requirements of this Specification. The Engineer and Owner assume no responsibility for information or opinions concerning site conditions not specifically stated in writing. The site location and specific site features are shown on the Construction Drawings.

3.2 PREPARATION

A. Provide, erect, and maintain temporary barriers and security devices at locations indicated.

B. Protect existing landscaping materials, appurtenances, and structures that are not to be demolished. Repair damage caused by site operations at no additional cost to the Owner.

C. Prevent movement or settlement of adjacent structures. Provide bracing and shoring.

D. Mark location of utilities. Protect and maintain in safe and operable condition the utilities to remain. Prevent interruption of existing utility service occupied or used facilities, except when authorized in writing by authorities having jurisdiction. Provide temporary services during interruptions to existing utilities as acceptable to governing authorities.

E. Provide dumpsters and/or rolloff containers for interim placement of demolition debris. Make arrangements for off-site debris removal and disposal. Secure and place containers in a safe manner.

F. Conduct operations with minimum interference to public or private accesses and facilities. Maintain access and egress at all times and clean or sweep any roadways daily or as required by the governing authority. At such times as deemed necessary by the Owner, dust control shall be provided with sprinkling systems or equipment provided by the Contractor.

G. Protect benchmarks, property corners, and all other survey monuments from damage or displacement. If a marker needs to be removed it shall be referenced by a licensed land surveyor and replaced, as necessary.

H. Provide traffic control as required, in accordance with the U.S. Department of Transportation “Manual of Uniform Traffic Control Devices” and the Massachusetts Department of Transportation.

3.3 INSTALLATION / CONSTRUCTION / DEMOLITION

A. Perform base course construction in a manner that will drain surface properly at all times and at the same time prevent runoff from adjacent areas from draining onto base course construction.

B. Compact base material to no less than 98% of optimum density as determined by ASTM D698 or 95% of optimum density, as determined by ASTM D1557, unless otherwise indicated on the Construction Drawings.

C. Gravel Base. Construct to thickness indicated on the Construction Drawings.

D. Apply in lifts or layers not exceeding 8 inches, measured loose.

E. Compact, regrade, and add additional material as required.

END OF SECTION

SECTION 32 92 19

SEEDING

1.0 GENERAL

1.1 DESCRIPTION OF WORK

A. Extent of work: all disturbed areas.

B. Work of this Section includes, furnishing, placing leveling and compacting of new topsoil, furnishing and application of soil amendments, furnishing and application of fertilizers, and furnishing and spreading seed and mulch.

C. Topsoil will be stockpiled for reuse in new lawn work. If quantity of stockpiled topsoil is insufficient, provide additional topsoil to complete lawn work.

D. Maintain seeded areas until acceptance.

1.2 RELATED DOCUMENTS

Drawings and general provisions of Contract, including General and Supplementary Conditions and Division 1 Specifications sections, apply to the work of this section.

1.3 SUBMITTALS / PROJECT RECORD DOCUMENTS

A. Certification of Grass Seed: Submit vendor's certified statement for grass seed mixture required, stating botanical and common name, percentage by weight, and percentages of purity, germination and weed seed for each grass seed species.

B. Topsoil analysis report: Submit soil analysis for proposed new topsoil. Indicate suitability of topsoil for lawn growth. If not suitable, state recommended quantities for nitrogen, phosphorus and potash; and any limestone, aluminum sulphate or other soil amendments necessary to make topsoil suitable.

C. Maintenance Instructions: Submit written instructions recommending procedures to be established by Owner for maintenance of lawn work during entire period of a year.

1.4 REQUIREMENTS, CODES

The following are minimum requirements and shall govern except that all Federal, Local, and/or State Codes and Ordinances shall govern when their requirements are in excess hereof.

1.5 DELIVERY STORAGE AND HANDLING

A. Deliver grass seed in original containers showing analysis of seed mixture, percentage of pure seed, year of production, net weight, date of packaging and location of packaging. Damaged packages are unacceptable.

B. Deliver fertilizer in unopened waterproof bags showing weight, guaranteed chemical analysis and name of manufacturer. Store fertilizer so that it will be dry and free flowing when used.

C. Lime shall be delivered in a dry free flowing condition until used.

1.6 WARRANTY

Warranty seeding for a period of one year after substantial completion, against defects including death and unsatisfactory growth, but excepting defects resulting from neglect by Owner, abuse or damage by others, or unusual phenomena or incidents which are beyond the contractor's control.

2.0 PRODUCTS

2.1 MATERIALS

A. Topsoil:

1. Reused Topsoil: As available from site work.
2. Imported Topsoil: Provide topsoil that is fertile, friable, naturally loamy, surface soil free of subsoil, clay lumps, brush, weeds and other litter and free of roots, stumps, stones larger than 2" in any dimension, and other extraneous or toxic matter harmful to plant growth. Obtain topsoil from local sources or from areas having similar soil characteristics to that found at the site of work. Obtain topsoil from naturally well-drained sites where topsoil occurs in depth of not less than 4"; do not obtain from bogs or marshes. Topsoil to have an acidity range (pH) of 5.5 to 7.5 containing a minimum of 4% and a maximum of 25% organic matter.

B. Soil Amendments:

1. Lime: Natural limestone containing not less than 85% of total carbonates, ground to such fineness that not less than 90% passes a 10-mesh sieve and not less than 50% passes a 100-mesh sieve.

2. Peat humus: To be FS Q-P-166, Type II composed of mosses (other than sphagnum) or reed-sedge peat (Type IV) of a course fibrous texture and with a pH of 6.0 to 7.5, unless otherwise indicated. For acid loving trees and shrubs, provide moss peat with a pH of 3.2 to 4.5, course fibrous

texture, Type I, Class B (medium divided sphagnum moss peat) or Type IV (reed-sedge moss peat).

3. Fertilizer: Provide complete commercial fertilizer, of neutral character, with some elements derived from organic sources, containing not less that 4% available phosphoric acid, not less than 2% soluble potash, and a percentage of nitrogen required to provide not less than 1.0 lb. of actual nitrogen per 1000 square feet (10-10-10) of lawn area. Provide nitrogen in a form that will be available to the lawn during initial period of growth.

C. Seed:

1. Seed shall be from the same or previous year's crop and shall have not more than 1% weed content.
2. Seed shall be furnished in fully labeled, standard, sealed containers.
3. Percentage and germination of each seed type in the mixture, purity and weed/seed content of the mixture shall be clearly stated on the label.
4. Seed shall be furnished on a pure live seed (PLS) basis. The weight of PLS is computed by the labeled purity percentage multiplied by the labeled germination percentage multiplied by the weight. Seed shall conform to the following:

a. Level grassed areas (Level to 2.5:1 slopes). The seed mix shall be "Lofts Tri-Plex General" or approved equal applies at a rate of 170lbs/acre. The mix shall be composed of the following.

Kind of Seed	PLS per acre, pounds
Kentucky Bluegrass	30 %
Chewings Fescue	30 %
Perennial Ryegrass	40%

D. Hay Mulch: Mowed and properly cut grass or legume mowings, reasonably free from swamp grass, weeds, twigs, debris or other deleterious material. It shall be free from rot or mold and shall be acceptable to the Engineer.

E. Jute Matting: Un-dyed, unbleached jute yarn woven into uniform, open, plain weave mesh; furnished in rolled strips 48-inches wide; 78 warp ends per width of cloth; 41 weft ends per yard; weight to average 1.22 to 1.80 lbs per linear yard.

3.0 EXECUTION

3.1 SOIL PREPARATION

A. Limit preparation to areas that will be planted in immediate future.

B. Protect existing underground improvements from damage.

C. Loosen sub-grade of lawn areas to a minimum depth of 4". Remove stones over

1-1/2" in any dimension and sticks, roots, rubbish and other extraneous matter.

D. Clean topsoil of roots, plants, sods, stones, clay lumps and other extraneous matter harmful of toxic to plant growth.

E. Mix soil amendments and fertilizers with topsoil at rates specified by manufacturer. Delay mixing of fertilizer if planting will not follow placing of topsoil within a few days. Mix soil either prior to spreading or apply soil amendments on surface of spread topsoil and rake thoroughly into top 4" of topsoil before planting. Place limestone evenly at a rate of 50 to 100 lbs per square feet.

F. Spread topsoil mixture to depth required to meet thickness, grades and elevations shown, after light rolling and natural settlement. Do not spread if material if frozen or if sub-grade is frozen. Grade to eliminate rough spots and low areas where ponding may occur. Maintain smooth, uniform grade.

G. Assure positive drainage away from structures.

H. Moisten prepared lawn areas before planting. Water thoroughly and allow surface to dry off before planting. Do not create a muddy soil condition.

3.2 SEEDING

A. Apply seed at a rate of 4 lbs per 1,000 square feet evenly in two intersecting directions. Rake in lightly.

B. Do not sow immediately following rain, when ground is too dry or during windy periods.

C. Roll seeded area with roller not exceeding 112 lbs.

D. Apply water with a fine spray immediately after each area has been sown.

E. Seeding shall be done between April 15 and June 1, between August 15 and October 15, or as directed or permitted. Seeding shall not be done during windy weather or when the ground is frozen, excessively wet or otherwise non-tillable.

3.3 MULCHING

Apply mulch at the rate of 90 pounds per 1000 square feet. Mulch shall be applied immediately after seeding.

3.4 MAINTENANCE PERIOD

Until final acceptance.

3.5 MAINTENANCE

A. Maintain surfaces and supply additional topsoil where necessary, including areas affected by erosion.

B. Water to ensure uniform seed germination and to keep surface of soil damp.

C. Apply water slowly so that surface of soil will not puddle and crust.

D. Cut grass first time when it reaches height of 2½ inches and maintain to minimum height of 2 inches. Do not cut more than 1/3 of blade at any one mowing. Remove clippings.

E. After first mowing water grass sufficient to moisten soil from 3 inches to 5 inches deep.

F. Apply weed killer if weeds start developing during calm weather when air temperature is above 50 degrees F.

G. Replant damaged grass areas showing root growth failure, deterioration, bare or thin spots and eroded areas.

3.6 RESTORATION

Restore pavement, concrete, grassed areas, planted areas and structures damaged during execution of work of this section.

3.7 ACCEPTANCE

Seeded areas will be accepted at end of maintenance period when seeded areas are properly established and otherwise acceptable.

END OF SECTION

SECTION 33 11 13

WATER DISTRIBUTION SYSTEMS

1.0 GENERAL

1.1 DESCRIPTION OF WORK

A. Furnish all labor, materials, services, equipment, and other items required for the installation of the water distribution system and services. This shall include, but not be limited to, the following: pipe and fittings for site water lines, including domestic water services, fire services, distribution valves (gate and butterfly type), service valves (corporation stops, curb stops and gate valves), wet taps, meter pits, air release valve and manhole, blow-off hydrant, blow-off hydrant manhole, water meters, and fire hydrants (complete as detailed). Set lines, elevations, grades and control for water distribution system installation for the duration of the work including careful maintenance of benchmarks, property corners, monuments, and other reference points. The Contractor shall pay for and complete the necessary steps to become an approved contractor with the Wareham Fire District at no additional cost to the Owner. Any costs associated with adhering to the aforementioned requirement shall be borne by the Contractor. All work shall be in accordance with Wareham Fire District Rules and Regulations if in conflict with the specifications below.

1.2 RELATED SECTIONS AND DOCUMENTS

A. Section 31 01 10 – Site Preparation

B. Section 31 20 00 – Earth Moving

C. Governing Authority and Code Requirements

D. Wareham Fire District Rules and Regulations

E. All Necessary Construction Permits

F. Construction Drawings

1.3 SUBMITTALS / PROJECT RECORD DOCUMENTS

A. Product Data. Provide Shop Drawings for all materials required for use including: piping, pipe fittings, gaskets, joint restraint system, hydrants, valves, valve boxes, air release valve, blow-off hydrant, manholes, castings and any other accessories required to complete the work Engineer and applicable governing authorities.

1. Shop Drawings shall be provided in a timely manner to allow 15 days for Engineer's review and a minimum of 15-days for local review.
2. Materials ordered or installed without approval shall be removed and/or replaced at the Contractor's expense. No additional time will be allowed for delays associated with such use of unapproved product.

B. Manufacturer's Certificate. Provide manufacturer's certificate that products meet or exceed applicable industry, Federal, State, or local requirements as referenced in these specifications for the work specified herein.

C. Accurately record actual locations of piping mains, valves, connections, utility crossings and top of pipe elevations. Provide a minimum of three ties to permanent features for all valve box, manhole, tee, bend, vertical offset, and end cap locations. Provide top of pipe elevation and all changes in slope, valves and at 300-foot intervals

D. Identify and describe unexpected variations to subsoil conditions or discovery of uncharted utilities.

1.4 REGULATORY REQUIREMENTS

A. The Contractor shall maintain access for vehicular and pedestrian traffic as required for other site operations and construction activities. Utilize temporary striping, flagmen, barricades, warning signs, and warning lights as required and any other applicable work as required by the Massachusetts Department of Transportation and/or local agencies. Do not close or obstruct roadways, sidewalks, entrances/exits, hydrants, or any utilities without permits.

B. Follow the applicable safety standards and guidelines as established by OSHA and other applicable local, State, and Federal governing agencies.

C. Contact DigSafe (888-344-7233) 72 hours prior to commencing any excavation. Arrange with local utility entity for water, sewerage and drainage to mark these utilities. Allow the required time (as defined by the local utility) for all utilities to be marked.

D. Comply with applicable regulations and requirements associated with environmental protection, including following the Storm Water Pollution Prevention Plan.

1.5 REFERENCES

A. Follow the applicable safety standards and guidelines as established by OSHA and other applicable local, State, and Federal governing agencies.

B. Follow the applicable standards and references necessary to complete the work, including but not limited to:

AASHTO T180	Moisture Density Relations of Soils using a 10-pound (4.54 kg) Hammer and an 18-inch (457 mm) Drop.
ANSI/ASME B16.18	Cast Copper Alloy Solder Joint Pressure Fittings.
ANSI/ASME B16.26	Cast Copper Allow Fittings for Flared Copper Tubes.
ANSI/ASME B16.22	Wrought Copper and Copper Alloy Solder Joint Pressure Fittings.
ANSI/ASTM D1557	Laboratory Compaction Characteristics of Soil using Modified Effort.
ANSI/ASTM D2466	Polyvinyl Chloride (PVC) Plastic Pipe Fittings, Schedule 40.
ANSI/AWS A5.8	Brazing Filler Metal.
ANSI/AWWA C104	Cement Mortar Lining for Ductile Iron Pipe and Fittings for Water.
ANSI/AWWA C105	Polyethylene Encasement for Ductile Iron Piping for Water and Other Liquids.
ANSI/AWWA C110	Ductile Iron and Gray Iron Fittings, 3-in. through 48-in. for Water and Other Liquids.
ANSI/AWWA C111	Rubber Gasket Joints for Ductile Iron and Gray Iron Pressure Pipe and Fittings.
ANSI/AWWA C116	Protective Fusion-Bonded Epoxy Coatings for the Interior and Exterior Surfaces of Ductile Iron and Gray Iron Fittings for Water Supply Service.
ANSI/AWWA C150	Thickness Design of Ductile Iron Pipe.
ANSI/AWWA C151	Ductile Iron Pipe, Centrifugal Cast-in-Metal Molds or Sand-Lined Molds, for Water or Other Liquids.
ANSI/AWWA C153	Ductile Iron Compact Fittings 3-in. Through 24-in. and 54-in. Through 64-in. For Water Service
ANSI/AWWA C500	Metal Seated Gate Valves, 3-inch through 48-inch NPS, for Water and Sewage Systems.
ANSI/AWWA C502	Dry Barrel Fire Hydrants.
ANSI/AWWA C504	Rubber Sealed Butterfly Valves.

ANSI/AWWA C508	Swing Check Valves for Waterworks Service, 2-inch through 24-inch NPS.
ANSI/AWWA C509	Resilient Seated Gate Valves 3 inches through 12 inches NPS, for Water and Sewage Systems.
ANSI/AWWA C512	Air Release, Air Vacuum and Combination Air Valves for Waterworks Services.
ANSI/AWWA C550	Protective Epoxy Interior Coating for Valves and Hydrants.
ANSI/AWWA C600	Installation of Ductile - Iron Water Mains and Appurtenances.
ANSI/AWWA C605	Underground Installation of Polyvinyl Chloride (PVC) Pressure Pipe and Fittings for Water.
ANSI/AWWA C606	Grooved and Shouldered Type Joints.
ANSI/AWWA C651	Disinfecting Water Mains.
ANSI/AWWA C800	Underground Service Line Valves and Fittings.
ANSI/AWWA C900	Standard for Polyvinyl Chloride (PVC) Pressure Pipe, 4-inch through 12-inch for Water.
ASTM/AWWA	C901 for Polyethylene and Polybutylene Pipe and Tubing.
ASTM B88–62	Seamless Copper Water Tube.
ASTM D1785	Polyvinyl Chloride (PVC) Plastic Pipe, Schedules 40, 80, and 120.
ASTM D2241	Polyvinyl Chloride (PVC) Plastic Pipe (SDR-PR).
ASTM D2855	Making Solvent–Cemented Joints with Polyvinyl Chloride (PVC) Pipe and Fittings.
ASTM D2922	Density of Soil and Soil Aggregate in Place by Nuclear Methods (Shallow Depth).
ASTM D3017	Water Content of Soil and Soil Aggregate Mixture and Rock in Place by Nuclear Methods (Shallow Depth).
ASTM D3139	Joints for Plastic Pressure Pipes using Flexible Elastomeric Seals.

ASTM D3035	Polyethylene (PE) Plastic Pipe (DR-PR) based on Controlled Outside Diameter.
AWWA C901	Polyethylene (PE) Pressure Pipe, Tubing, and Fittings, ½-inch through 3-inch for Water.
UL 246	Hydrants for Fire Protection Services.

1.6 ENVIRONMENTAL REQUIREMENTS

A. Conform to applicable regulatory procedures when discovering hazardous or contaminated materials.

B. Comply with governing regulations pertaining to environmental protection.

C. Acquire all necessary permits, licenses, and/or certificates as required by local, State, and/or Federal agencies prior to the start of the work and thereafter as appropriate.

D. The Contractor shall remove and dispose of all waste materials generated during this work, including waste paints, lubricants, joint compounds, glues and adhesives, and other related compounds/chemicals. All waste products shall be disposed of according to all applicable Federal, State, and local governing agencies.

E. Any waste classified as a hazardous or toxic waste shall be disposed in the appropriate manner to a licensed hazardous waste disposal facility. Verification of proper disposal shall be submitted upon completion of the project.

1.7 DELIVERY, STORAGE AND HANDLING

A. Deliver materials and products, and store and handle in strict compliance with manufacturer's instructions and recommendations and applicable governing agencies. Protect from all possible damage.

B. Sequence deliveries to avoid and minimize on-site storage.

C. Materials shall be stored in areas approved by the Engineer and in a manner that is safe since the facility will still be in use during construction.

1.8 QUALITY ASSURANCE / QUALITY CONTROL

A. Contractor shall install piping using equipment, means and methods in accordance with manufacturer's recommendations including but not limited to:

1. Pushing pipe into place aligned with the centerline of the pipe section it is inserted into.
2. Use of vegetable-based lubricants for the installation of gaskets and pushing the pipe into place.
3. Installing joint restraints as required and when used, documenting the installation of each restraining type gasket;

B. Contractor shall compact and backfill in accordance with Specification Section 31 00 00 and this section to provide a firm base for the pipeline.

C. Work deemed unacceptable or not in compliance with these specifications and manufacturer's recommendations shall be removed and reinstalled. Damaged materials shall not be reused.

2.0 PRODUCTS

2.1 MATERIALS

All pipes, valves, fittings, meters, hydrants, and miscellaneous appurtenances shall conform strictly to the requirements of the local, State, and Federal governing agencies.

A. Pipe

Pipe sizes 3 inches and larger that are installed below grade and outside building shall comply with one of the following:

1. C-900 PVC Water Main. In accordance with ANSI A21.51, fittings shall be mechanical joint complying with ANSI A21.10 or ANSI 21.11 (AWWA C-151)(Class 52).

B. Gate Valves - 2 inches and over

1. Manufacturers - Mueller Resilient Seat Gate Valves or approved equal.
2. Gate Valves to open counter-clockwise per Town standard.
3. ANSI/AWWA C509, iron body, single wedge, resilient seat, flanged or mechanical joint ends, control rod, post indicator where indicated on the Construction Drawings, extension box, and valve key.

C. Butterfly Valves - From 2 inches to 24 inches.

Not Used.

D. Hydrant

1. Hydrant. Type as required by utility company and as shown on Construction Drawings. Direction of opening to be counter clockwise per Town standard.

2. Manufacturer shall be Mueller or approved equal.
3. Hydrant Extensions. Fabricate in multiples of 6 inches with rod and coupling to increase barrel length. Furnish and Install as required at no additional cost to the Owner.
4. Hose and Steamer Connection. Match sizes with utility company, two hose nozzles, one steamer nozzle.
5. Finish. Primer and two coats of enamel or special coating to color as required by utility company.

E. Accessories

1. Gland type joint restraint shall utilize wedges that grip the pipe harder as pressure waves become stronger and provide flexibility in the joint and provide a minimum of 350 psi in thrust restraint capacity. Acceptable systems include the MegaLug series of products by EBAA Iron, Inc. Texas, or similar by others.

   Joint restraint lengths shall be as follows:

Minimum Join Restraint Length, per side (2:1 Safety Factor)

Pipe Diameter	90° Bend	45° Bend	22° Bend
6”	29.0	12.0	6.0
8”	38.0	16.0	8.0
12”	53.0	22.0	11.0

2. Gasket based thrust restraint systems may be considered but shall provide a minimum restraint capacity of 350 psi. Acceptable products include Field Lok Gasket by US Pipe
3. The Contractor shall provide all tools, materials, equipment, and supplies necessary to conduct the work fully to meet the requirements of this Section as detailed on the Construction Drawings and as required by local, State, and Federal governing agencies.

2.2 MIX DESIGN AND TESTING

Mix design and testing shall be conducted as required to meet the work of this Specification and to conform to applicable governing agencies.

2.3 CONFIGURATIONS

Follow the details shown on the Construction Drawings so as to match new work with existing water distribution structures and connections, unless otherwise stated or shown.

3.0 EXECUTION

3.1 EXAMINATION

a. Verify that building service connection and municipal utility water main size, location, and invert are as indicated.

b. Verify items provided by other Sections of work are properly sized and located.

c. Verify that built-in items are in proper location, and ready for roughing into work.

d. Verify that excavation for manholes is correct.

e. Contractor shall visit the site prior to submitting the bid for work specified herein and on the Construction Drawings and become familiar with existing site conditions. The Contractor shall evaluate the potential access difficulties and provide all necessary equipment and precautions to comply with the requirements of the Specification. Failure to fully investigate the site conditions shall not relieve the Contractor of the responsibility to adhere to the requirements of this Specification. The Engineer and Owner assume no responsibility for information or opinions concerning site conditions not specifically stated in writing. The site location and specific site features are shown on the Construction Drawings.

3.2 PREPARATION

A. Ream pipe and tube ends and remove burrs.

B. Remove scale and dirt, on inside and outside, before assembly.

C. Prepare pipe connections to equipment with flanges or unions.

D. Conduct operations with minimum interference to public or private accesses and facilities. Maintain access and egress at all times and clean or sweep any roadways daily or as required by the governing authority. At such times as deemed necessary by the Owner, dust control shall be provided with sprinkling systems or equipment provided by the Contractor.

E. Protect benchmarks, property corners, and all other survey monuments from damage or displacement. If a marker needs to be removed it shall be referenced by the Engineer and replaced, as necessary, by the same.

F. Provide traffic control as required, in accordance with the U.S. Department of Transportation "Manual of Uniform Traffic Control Devices" Massachusetts Department of Transportation requirements.

3.3 INSTALLATION / CONSTRUCTION

Where these Specifications conflict with the requirements of the governing agency, the requirements of the applicable governing agency shall apply.

A. Bedding

1. Excavate pipe trench in accordance with Section 31 00 00 for work of this Section. Hand trim excavation for accurate placement of pipe to elevations required or indicated.
2. Place bedding material at trench bottom, level fill materials in one continuous layer not exceeding 8- inches compacted depth, compact to 95% dry density.
3. Backfill around sides and to top of pipe with fill, tamped in place and compacted to 95% dry density.
4. Maintain optimum moisture content of bedding material to attain required compaction density.

B. Pipe

1. Maintain separation of water main from sanitary sewer piping and storm drainage piping in accordance with State or local code.
2. Install pipe to indicated elevation to within tolerance of 1 inch.
3. Install C-900 PVC and ductile iron fittings to ANSI/AWWA C600.
4. Route pipe in straight lines. Where pipe joints are intended to be deflected, follow the alignment shown in the layout plan and equalize deflection angle among the deflected joints.
5. Install pipe to allow for expansion and contraction without stressing pipe or joints.
6. Install access fittings to permit disinfecting of water system performed under this Section.
7. Slope water pipe and position drain or blow-off hydrant assembly at low points as required in the plans; position air relief valve manhole assemblies at designated high points in the system.
8. Connections with Existing Pipelines. Where connections are made between new work and existing piping, make connection using suitable fittings for conditions encountered. Make each connection with existing pipe at a time and under conditions which least interfere with operation of existing pipeline.
9. Form and place concrete for thrust blocks at each elbow or change of direction of pipe main.
10. Establish elevations of buried piping to ensure no less than 54 inches of cover over the top of pipe: In northern climates, establish elevations of buried piping to ensure 6 inches between top of pipe and frost line.

B. Valves and Hydrants

1. Install gate valves as indicated on the Construction Drawings and supported on concrete pads with valve stem vertical and plumb. Install valve boxes in a

manner that will not transmit loads, stress, or shock to valve body. Center valve box over operating nut of valve vertical and plumb. Securely fit valve box together leaving cover flush with finished surface.

1. Set hydrants plumb and locate pumper nozzle perpendicular to roadway.
3. Install fire hydrant assemblies as indicated on the Construction Drawings in vertical and plumb positions with steamer nozzle pointed toward building unless otherwise directed by local authorities. Support hydrant assembly on compacted crushed stone and firmly brace on side opposite inlet pipe against undisturbed soil and concrete blocking. Place minimum of 6 cubic feet of crushed stone or gravel around hydrant base and barrel after thrust blocking has cured at least 24 hours. Exercise care when backfilling and compacting so proper vertical position will not be altered. Do not block hydrant drain.

C. Disinfection of Domestic Water Piping System

1. Sterilize distribution system with chlorine before acceptance for domestic operation. Amount of chlorine shall be such as to provide dosage of no less than 50 parts/million. Thoroughly flush lines before introduction of chlorinating materials. Provide a disinfection contact period of no less than 24 hours. Open and close in-line valves within lines being sterilized several times during contact period. Following the contact period, system shall be flushed with clean water until residual chlorine content is no greater than 1.0 part/million. After sterilization, take water and bacteriological test in accordance with AWWA C 651 specifications. Do not place distribution system in service until approval is obtained from applicable governing authorities. All work shall be conducted in accordance with local governing agencies.
2. All tests shall be conducted in the presence of the applicable governing agency personnel and the Owner's representative. The governing agency shall be notified 48 hours in advance of all tests.

D. Service Connections

Provide water service in accordance with utility company requirements. Where high service pressures require it, provide service with pressure reducer and backflow preventer, and water meter as required with by-pass valves and sand strainer. Equipment shall be of the manufacturer and model acceptable to the utility.

E. Backfill

After the utilities and related structures have set sufficiently, the spaces and areas surrounding the utilities shall be refilled to the required elevation with suitable material that shall be compacted until firm, solid and neatly graded.

F. Cleaning Up and Adjusting

1. Sweep paved surfaces and wash free of stains, discolorations, dirt, and other foreign material just prior to final inspection.
2. Protect paved surfaces from damage until acceptance of work. Exclude traffic from these areas as appropriate after placement. When construction traffic is permitted, maintain pavement as clean as possible by removing surface stains and spillage of materials.

G. Pressure and Leakage Tests

1. Except as otherwise directed, all pipelines shall be given combined pressure and leakage tests in sections of approved length. The contractor shall furnish and install suitable temporary testing plugs or caps; all necessary pressure pumps, pipe connections, meters, gates and other necessary equipment; and all labor required. The Wareham Fire District shall have the privilege of using its own gauges.
2. Subject to approval and provided that the tests are made within a reasonable time considering the progress of the project as a whole and the need to put the section into service, the contractor may make the tests when he desires, utilizing a testing company approved by the Wareham Fire District. However, pipelines in excavation or embedded in concrete shall be tested prior to the backfilling of the excavation or placing of the concrete, and exposed piping shall be tested prior to field painting.
3. Unless it has already been done, the section of pipe to be tested shall be filled with water of approved quality, and all air shall be expelled from the pipe. If hydrants or blowoffs are not available at high points for releasing air, the contractor shall make the necessary excavations and do the necessary backfilling and make the necessary taps at such points and shall plug said holes after completion of the test.
4. The section under test shall be maintained full of water for a period of twenty-four (24) hours prior to the combined pressure and leakage test being applied.
5. The pressure and leakage test shall consist of first raising the water pressure (based on the elevation of the lowest point of the section under test and corrected to the gauge location) to a pressure of two hundred (200) pounds per square inch. If the contractor cannot achieve the specified pressure and maintain it for a period of one (1) hour, the section shall be considered as having failed to pass the pressure test.
6. Following or during the pressure test, the contractor shall make a two-hour leakage test by metering the flow of water into the pipe while maintaining in

the section being tested a pressure of one hundred fifty (150) pounds per square inch. If the average leakage is equal to or less than that allowed under AWWA Standard C600, latest revision, for installation of that specific pipe, the section shall be considered as having passed the leakage test.

7. If the section fails to pass the pressure and leakage test, the contractor shall do everything necessary to locate, uncover and repair or replace the defective pipe, fitting or joint, all at their own expense. Additional tests and repairs shall be made until the section passes the specified test.

END OF SECTION

SECTION 33 11 13.13

DUCTILE IRON FITTINGS

1.0 GENERAL

1.1 SUMMARY

A. Furnish all labor, materials, equipment and incidentals required to install ductile iron fittings for water main as shown on the Drawings and as specified herein.

B. Furnish all labor, materials, equipment and incidentals required to install any extra fittings, specials, shorts, etc. that are not shown on the Plans or as specified herein but are required as a result of unexpected subsurface conditions or utility locations.

C. All work shall be in accordance with Wareham Fire District Rules and Regulations if in conflict with the specifications below.

1.2 RELATED SECTIONS

A. Section 31 20 00 – Earth Moving.

B. Other sections of the specifications, not referenced above, shall also apply to the extent required for proper performance of the work.

1.3 REFERENCES

A. All pipe and fittings shall conform to the latest edition of the following specifications unless otherwise specified herein.

1. ANSI Standard Specification A21.53 (AWWA-C-153) for Compact Design, 350 psi rating, Ductile Iron Fittings for Water.
2. ANSI Standard Specification A21.11 (AWWA-C-111) for Rubber-Gasket Joints for Cast Iron and Ductile Iron Pressure Pipe and Fittings.
3. ANSI Standard Specification A21.15 (AWWA C115) for Flanged Ductile-Iron Pipe with Threaded Flanges.
4. ANSI Standard Specification 21.4 (C104) Cement Mortar Lining for Ductile Iron Pipe and Fittings.

1.4 SUBMITTALS

A. Submit to the Owner, material specifications and shop drawings for all materials and equipment furnished under this Section.

B. Provide Certificates of Compliance on pipe materials.

1.5 QUALITY ASSURANCE

A. The Contractor shall secure all permits and pay all fees required to carry out the piping work. He shall comply with all laws, ordinances, codes, rules, and regulations of the local and state authorities having jurisdiction over any of the work specified herein. Where provisions of the Contract are in conflict with the codes, the code shall govern requirements set forth in this Section and indicated on the Drawings. The Contract documents shall govern when in excess of the required or minimum regulations.

B. Prior to the first shipment of pipe, submit certified test reports that the pipe for this Contract was manufactured and tested in accordance with the ASTM and ANSI/AWWA Standards specified herein.

C. All fittings shall be from a single manufacturer, not necessarily the pipe manufacturer.

D. Inspection of the fittings will also be made by the Owner after delivery. The fittings shall be subject to rejection at any time on account of failure to meet any of the Specification requirements. Fittings rejected after delivery shall be marked for identification and shall immediately be removed from the job site at no additional cost to the Owner.

2.0 PRODUCTS

2.1 MATERIALS

A. All buried fittings shall be manufactured in North America, ductile iron, compact design, 350 psi rating, with mechanical joints (unless otherwise noted on the plans) and shall conform to AWWA Specification C153-84.

B. Mechanical and push-on joints shall conform to ANSI/AWWA A21.11/C111 as applicable.

C. Couplings and transitional couplings shall consist of a cast iron sleeve and shall have gaskets suitable for the pipe being joined. The bolts and nuts shall be corrosion resistant alloy steel such as Cor-Ten steel or an approved equal. Couplings shall be Romac style 501, Dresser style 153, Rockwell type 431 or approved equal.

D. Solid sleeves shall have a pressure rating of 250 psi and be ductile iron long body type (12” min.) with mechanical joints and retainer glands.

E. Concrete Thrust Blocks

1. Concrete thrust blocks shall be machine mixed concrete, 2500 psi strength after 28 days and shall contain an air-entraining admixture. The maximum stone size is 1.5 in. but under special conditions as required by the Engineer; furnish concrete with a smaller stone size.

3.0 EXECUTION

3.1 HANDLING PIPE AND FITTINGS

A. Care shall be taken in loading, transporting, and unloading to prevent injury to the pipe. Pipe or fittings shall not be dropped. All pipe or fittings shall be examined before installing, and no piece shall be installed which is found to be defective. There shall be no chain or forklift scars on lining. Any damage to the pipe linings or coatings will results in the pipe or fitting being rejected and removed from the job by the Contractor at no additional cost to the Owner.

B. If any defective pipe is discovered after it has been installed, it shall be removed and replaced with a sound pipe in a satisfactory manner at no additional cost to the Owner. All pipe and fittings shall be thoroughly cleaned before installing, shall be kept clean until they are used in the work, and when installed shall conform to the lines, grades and dimensions required.

3.2 INSTALLATION

A. All piping and fittings shall be installed true to alignment and rigidly supported thrust anchors shall be provided where required. If necessary, each length of pipe shall be cleaned out before installation.

B. Pipe shall be installed in accordance with the Town of Wareham Fire District requirements regarding excavation and backfilling, alignment and grade, trench preparation, pipe laying, anchorage, testing, protection and cleaning. All backfilling shall be in accordance with Section 31 00 00.

C. All ductile iron pipe for nipples, closures, and similar purposes shall be cut on the job from full lengths using a power saw as recommended by the manufacturer. The use of cold chisels or squeeze type cutters for cutting is strictly prohibited.

3.3 PUSH-ON JOINTS

Push-on joints shall be made in accordance with the manufacturer's instructions. The bell and spigot shall be thoroughly cleaned of dirt in the trench. The rubber gasket shall be inserted and gasket and spigot shall be lubricated with a lubricant approved by the pipe manufacturer. A clean rag shall be placed under the joint to protect the joint from dirt caused by unintentional grounding of the pipe during jointing. The plain end of the pipe to be laid shall then be aligned and inserted in the bell of the pipe to which it is to be joined, and push home with a jack or by other Engineer approved means. After joining the pipe, a metal feeler gauge shall be used to verify that the rubber gasket is correctly positioned.

3.4 MECHANICAL JOINTS

A. Mechanical joints shall be made in accordance with Appendix A of ANSI/AWWA C111 and the manufacturer's instructions. Thoroughly clean before assembly. Bolts shall be tightened to the manufacturer's specified torques using a torque wrench. Under no conditions shall extension wrenches or an extended handle ratchet wrench be used to gain greater leverage.

B. All fittings shall have mechanical joints unless noted otherwise.

END OF SECTION

SECTION 33 40 00

STORM DRAINAGE SYSTEMS

1.0 GENERAL

1.1 DESCRIPTION OF WORK

A. Site storm drainage piping, fittings, accessories, and bedding.

B. Catch basins, drainage manholes, paved area drainage, and site surface drainage.

C. All work shall be in accordance with MassDOT construction specifications if in conflict with the specifications below.

1.2 RELATED SECTIONS AND DOCUMENTS

A. Section 33 40 00 – Demolition.

B. Section 31 01 10 – Site Preparation.

C. Section 31 20 00 – Earth Moving

D. Section 32 12 16 – Asphalt Pavement.

E. Section 33 11 13 – Water Distribution Systems.

F. Local governing authority and code requirements.

G. Construction Drawings.

1.3 SUBMITTALS / PROJECT RECORD DOCUMENTS

A. Accurately record actual installed locations of pipe runs, connections, catch basins, cleanouts, and invert elevations.

B. Identify and describe unexpected variations to subsoil conditions or discovery of uncharted utilities.

1.4 REGULATORY REQUIREMENTS

A. Contractor shall maintain access for vehicular and pedestrian traffic as required for site operations and other construction activities. Utilize temporary striping, flagmen, barricades, warning signs, and warning lights as required and any other applicable work as required by the Massachusetts Department of Transportation and/or local agencies. Do not close or obstruct roadways, sidewalks, entrances/exits, hydrants, or any utilities without necessary permits.

B. Follow the applicable safety standards and guidelines as established by OSHA and other applicable local, State, and Federal governing agencies.

C. Contact Dig Safe (888-344-7233) 72 hours prior to commencing any excavation.

1.5 REFERENCES / STANDARDS

A. Follow the applicable safety standards and guidelines as established by OSHA and other applicable governing agencies.

B. Follow the applicable standards and references necessary to complete the work, including but not limited to:

AIC 318	Building Code Requirements for Reinforced Concrete
AASHTO M294 and M252	Corrugated Polyethylene Pipe Smooth Interior.
AASHTO M36	Metallic (Zinc or Aluminum) Coated Corrugated Steel Culverts and Under Drains.
ASTM A48	Gray Iron Castings
ANSI/ASTM A74	Cast Iron Soil Pipe and Fittings.
ASTM A615	Deformed and Plain Billet-Steel Bars for Concrete Reinforcement
ANSI/ASTM C12	Installing Vitrified Clay Pipe Lines.
ANSI/ASTM C14	Concrete Sewer, Storm Drain, and Culvert Pipe.
ASTM C32	Sewer and Manhole Brick (Made from Clay or Shale)
ASTM C62	Building Brick (Solid Masonry Units made from Clay or Shale
ASTM C76	Reinforced Concrete Culvert, Storm Drain, and Sewer Pipe.
ASTM C139	Concrete Masonry Units for Construction of Catch Basins and Manholes
ASTM C140	Sampling and Testing Concrete Masonry Units

ASTM C270	Mortar for Unit Masonry
ANSI/ASTM C425	Compression Joints for Vitrified Clay Pipe and Fittings.
ANSI/ASTM C443	Joints for Circular Concrete Sewer and Culvert Pipe, using Rubber Gaskets.
ASTM C448	Standard Sizes of Coarse Aggregate for Highway Construction
ASTM C478	Precast Reinforced Concrete Manhole Sections.
ASTM C564	Rubber Gaskets for Cast Iron Soil Pipe and Fittings.
ASTM C700	Vitrified Clay Pipe, Extra Strength, Standard Strength, and Perforated.
ANSI/ASTM D1557	Moisture Density Relations of Soils using a 10-pound (4.54 kg) Hammer and an 18-inch (457 mm) Drop.
ASTM D2321	Underground Installation of Thermoplastic Pipe for Sewers and Other Gravity-Flow Applications.
ASTM D2922	Density of Soil and Soil-Aggregate in Place by Nuclear Methods (Shallow Depth).
ASTM D3017	Water Content of Soil and Rock in Place by Nuclear Methods (Shallow Depth).
ANSI/ASTM D3034	Type PSM Polyvinyl Chloride (PVC) Sewer Pipe and Fittings.
ASTM D3212	Joints for Drain and Sewer Plastic Pipes Using Flexible Electrometric Seals

1.6 JOB CONDITIONS

A. Coordinate termination of certain sections of existing storm drainage connections outside building, connection to on-site drainage system, and related trenching.

B. Structures to be demolished will be discontinued in use and vacated prior to start of work unless structure needs to remain in place during phased construction.

C. Owner assumes no responsibility for condition of structures to be demolished.

D. Owner will maintain conditions existing at time of inspection for bidding purposes in so far as practicable. Variations within structures may occur by Owner's removal and salvage operations prior to the start of the demolition work.

1.7 ENVIRONMENTAL REQUIREMENTS

A. Conform to applicable regulatory procedures when discovering hazardous or contaminated materials.

B. Comply with governing regulations pertaining to environmental protection.

C. Acquire all necessary permits, licenses, and/or certificates as required by local, State, and/or Federal agencies prior to the start of the work and thereafter as appropriate.

D. The Contractor shall remove and dispose all waste materials generated during this work, including waste paints, lubricants, joint compounds, sealants, glues and adhesives, and other related compounds/chemicals. All waste products shall be disposed according to all applicable Federal, State, and local governing agencies.

E. Any waste classified as a hazardous or toxic waste shall be disposed in the appropriate manner to a licensed hazardous waste disposal facility. Verification of proper disposal shall be submitted upon completion of the project.

1.8 DELIVERY, STORAGE AND HANDLING

A. Deliver materials and products, and store and handle in strict compliance with manufacturer’s instructions and recommendations and applicable governing agencies. Protect from all possible damage.

B. Sequence deliveries to avoid and minimize on-site storage.

C. Materials shall be stored in areas designated by the Engineer and in a manner that is safe since the facility will still be in use during construction.

1.9 QUALITY ASSURANCE / QUALITY CONTROL

The appropriate QA/QC measures will apply throughout the entire work of this project.

2.0 PRODUCTS

2.1 MATERIALS

A. Drainage Pipe and Accessories

1. Reinforced Concrete Pipe. Comply with requirements of ASTM C76, Class III unless another class type is indicated on the Construction Drawings, installed with flexible plastic (Bitumen) gaskets at all joints. Gaskets shall comply with AASHTO M-198 751, Type B, and shall be installed in strict accordance with pipe manufacturer's recommendations.
2. High Density Polyethylene Drain pipe shall be smooth interior wall, perforated corrugated polyethylene tubing conforming to ASTM F 667, equal to ADS N-12 Semi-Rigid Smooth Interior Corrugated Polyethylene Piping, manufactured by Advanced Drainage Systems, Inc., Columbus, OH, or approved equal.
3. The Contractor shall provide all tools, materials, equipment, and supplies necessary to conduct the work fully to meet the requirements of this Section as detailed on the Construction Drawings.

B. Pre-Cast Inlets, Catch Basins and Manholes

1. Drain manholes and catch basins shall be precast concrete.
2. Precast concrete manholes and catch basins shall conform to ASTM C 478, and shall be similar to those manufactured by Concrete Systems Inc., Hudson, NH; or Rotondo and Sons, Inc., Rehoboth, MA 02769

    a. Sections shall have tongue and groove joints.
    b. Joints between sections shall be made with preformed butyl rubber joint sealant conforming to ASTM C 443.
    c. Each section shall have no more than two suitable lifting holes or cast-in lifting devices.
    d. Precast base shall be manufactured with wall openings to receive the ends of pipes which are to be connected to structure.
    e. Pipe openings in base shall be minimum size required to receive pipe, and shall be accurately set to conform to the required line and grade.
    f. Drain pipe shall be joined to wall of concrete manhole or catch basin with nonshrink grout or flexible manhole sleeve, at the Contractor's option.
    g. Manhole steps shall be either extruded aluminum, conforming to Fed. Spec. QQ-A-200/8, or polypropylene plastic reinforced with

3/8 in. diameter steel rod as manufactured by M.A. Industries, Inc., Peachtree City, GA 30269, or approved equal.

1. Steps shall be drop-front, anti-skid design, 12 in. wide. Projection of front edge of step shall be greater than or equal to 5 in. from manhole wall.
2. Steps shall be embedded 4 in. into manhole wall. Those portions of aluminum steps to be embedded in manhole wall shall receive a heavy coat of heavy-bodied bituminous paint. Coating shall be thoroughly dry before steps are embedded in manhole.
3. Steps in precast sections shall be embedded at time of casting.
4. Manholes and catch basins shall be designed to safely withstand an AASHTO H-20 loading, as specified in the AASHTO Specifications.

C. Brick

Brick for support of castings shall be any of the following types:

1. Common brick meeting the physical requirements of ASTM C 62, Grade SW.
2. Clay brick meeting the physical requirements of ASTM C 32, Grade MS.

D. Portland Cement Mortar

1. Mortar shall be a Portland cement mortar conforming to ASTM C 270, Type M.
2. Mortar shall contain a waterproofing admixture. Waterproofing admixture shall be one of the following:

Admixture	Manufacturer
Hydratite Plus	W.R. Grace and Company
Medusa Waterproofing	Medusa Portland Cement Co.
Omicron Mortarproofing	Master Builders Company
Mortaron	The Aquabar Company
Hydrocide Powder	Sonneborn Building Products, Inc.

E. Non-Shrink Grout

Grout shall be nonshrink cement-based type, such as Master Builders Company "Embeco" or U.S. Grout Corporation "5 Star Grout".

F. Castings

1. Catch Basin Castings shall be straight frame with bottom flange, square grate minimum 24-inches on a side having holes approx. 2 ½-inches square, 8-inch rim height, with three flanges for at-curb location, and four flanges at all other locations. Minimum grate and rim weight for 4-flange unit shall be 460 lbs. Castings shall be H-20 load rated. Frame and grate shall be per Plans or approved equal. The use of economy weight castings is not permitted.
2. Double Catch Basin frame and grates shall use two 24-inch grates having holes approx. 2 ½-inches square in one double size, 8-inch high frame, with three flanges for at-curb locations, and 4-flanges for all other locations. Minimum frame and grate combined weight shall be 940 lbs. Castings shall be H-20 load rated. Frame and grate shall Etheridge Type M or approved equal. The use of economy weight castings is not permitted.
3. Manhole Castings shall be Plans standards or approved equal. The use of economy weight castings is not permitted.
4. Area drains shall be extra heavy cast iron frame and grate, manufactured by Zurn Cat. No. Z-610 12 in. Square Top Extra Heavy Duty Drain with secured grate, or approved equal.

G. Bituminous Paint

Bituminous paint shall be Koppers Company, Inc., "Bitumastic Black Solution", Sonneborn Building Products, Inc., "Gilsonite Base Paint", or equivalent bituminous-base product.

H. Asphalt Mastic Cement

Asphalt mastic cement shall be a pitch-base or asphalt-base compound fibrated with non-asbestos fibers conforming to Fed. Spec. SS-C-153.

I. Pipe Bedding and Backfill Material

1. Pipe bedding shall extend from bottom of trench to the spring line of the pipe. Bedding material shall be granular fill, well-rounded pea gravel, or well-rounded crushed rock with maximum particle size of 1-1/2 in.

2. Material around pipe from the spring line to a point at least 12 in. over the top of the pipe shall be selected backfill. Selected backfill shall be clean, well-graded material of Soil Types GW, GP, GM, GC, or SW, as classified by ASTM D 2487. Maximum particle size shall be 4 in.

J. Stone For Drain Outfall

1. Stone for drain outfall shall be sound, durable rock, angular in shape, obtained from on-site excavations if available. Rounded stones, boulders, sandstone, or similar stone, or relatively thin slabs will not be acceptable. Stone for apron and velocity reduction shall weigh between 50 and 300 lb., as indicated on the Drawings.
2. Gravel filter layer material shall be a crushed rock or crushed gravel, conforming to ASTM D 448, Size Number 67 gradation, as follows:

Sieve Size	% Passing by Weight
1 in.	100
3/4 in.	90-100
3/8 in.	20-55
No. 4	0-10
No. 8	0-5

3. Filter fabric shall be a non-woven polypropylene fabric made specifically for use in subsurface drainage structures equal to Mirafi 140N, manufactured by Mirafi, Inc., Charlotte, NC 28224, or approved equal.

2.2 MIX DESIGN AND TESTING

All mix design and testing work shall be conducted as required to conduct the work to fully meet the requirements of this Section.

2.3 CONFIGURATION

Follow the details shown on the Construction Drawings so as to match new work with existing stormwater drainage structures and connections, unless otherwise stated or shown.

3.0 EXECUTION

3.1 EXAMINATION

A. Verify that the trench cut and excavation base are ready to receive work, and excavations, dimensions, and elevations are as indicated on the Construction Drawings.

B. Verify items provided by other Sections of work are properly sized and located.

C. Verify that built-in items are in proper location, and ready for roughing into work.

D. Verify that excavation for manholes is correct.

E. Contractor shall visit the site prior to submitting the bid for work specified herein and on the Construction Drawings and become familiar with existing site conditions. The Contractor shall evaluate the potential access difficulties and provide all necessary equipment and precautions to comply with the requirements of the Specification. Failure to fully investigate the site conditions shall not relieve the Contractor of the responsibility to adhere to the requirements of this Specification. The Engineer and Owner assume no responsibility for information or opinions concerning site conditions not specifically stated in writing. The site location and specific site features are shown on the Construction Drawings.

3.2 PREPARATION

A. Hand trim excavations to required elevations. Correct over excavation with fine aggregate.

B. Remove large stones or other hard matter, which could damage piping or impede consistent backfilling or compaction.

C. Conduct operations with minimum interference to public or private accesses and facilities. Maintain access and egress at all times and clean or sweep any roadways daily or as required by the governing authority. At such times as deemed necessary by the Owner, dust control shall be provided with sprinkling systems or equipment provided by the Contractor.

D. Protect benchmarks, property corners, and all other survey monuments from damage or displacement. If a marker needs to be removed it shall be referenced by a licensed land surveyor and replaced, as necessary, by the same.

E. Provide traffic control as required, in accordance with the U.S. Department of Transportation "Manual of Uniform Traffic Control Devices" and the Massachusetts Department of Transportation requirements.

3.3 INSTALLATION / CONSTRUCTION / DEMOLITION

A. Bedding

1. Excavate pipe trench in accordance with Section 31 00 00 for work of this Section. Hand trim excavation for accurate placement of pipe to elevations indicated.
2. Place bedding material at trench bottom. Level materials in continuous layers not exceeding 12 inches compacted depth.
3. Maintain optimum moisture content of bedding material to attain required compaction density.

B. Pipe

1. Install pipe, fittings, and accessories in accordance with ASTM C12, ASTM D2321, manufacturer's instructions, and/or State or local requirements. Seal joints watertight.
2. Place pipe on minimum 6-inch deep bed of gravel. If installation is in groundwater, place pipe on minimum 6-inch deep bed of ¾" to 1 ½" crushed stone.
3. Lay pipe to slope gradients noted on the Construction Drawings with maximum variation from true slope of 1/8-inch in 10.0 feet.
4. Install aggregate at sides and over top of pipe. Provide top cover to minimum compacted thickness of 1-ft. 0-in. over crown of pipe barrel, compact to 95% dry density.
5. Refer to the Construction Drawings for manhole and catch basin requirements.

C. Catch Basins, Drain Manholes, and Inlets

1. Form bottom of excavation clean and smooth to correct elevation.
2. Form and place reinforced concrete base pad, with provision for storm drainage pipe end sections, or place pre-cast reinforced concrete pad at the locations and elevations as specified on the Construction Drawings.

3. Level top surface of base pad to receive concrete shaft sections, sleeved to receive storm drainage pipe sections.
4. Establish elevations and pipe inverts for inlets and outlets as indicated.
5. Mount lid and frame level in grout. Secure to top cone section to elevation indicated.

D. Backfill

After the drainage systems have set sufficiently, the spaces and surrounding areas shall be refilled to the required elevation with suitable material, which shall be compacted until firm, solid and neatly graded.

E. Cleaning Up and Adjusting

1. Sweep work areas and wash free of stains, discolorations, dirt, and other foreign material just prior to final inspection.
2. Protect concrete, paved surfaces, and work areas from damage until acceptance of work. Exclude traffic from these areas as appropriate after placement. When construction traffic is permitted, maintain pavement as clean as possible by removing surface stains and spillage of materials.

END OF SECTION

Appendix A – State Wage Rates

THE COMMONWEALTH OF MASSACHUSETTS
EXECUTIVE OFFICE OF LABOR AND WORKFORCE DEVELOPMENT
DEPARTMENT OF LABOR STANDARDS

MAURA HEALEY
Governor

KIM DRISCOLL
Lt. Governor

Prevailing Wage Rates

As determined by the Director under the provisions of the Massachusetts General Laws, Chapter 149, Sections 26 to 27H

LAUREN JONES
Secretary

MICHAEL FLANAGAN
Director

Awarding Authority: Town of Rochester

Contract Number:

City/Town: ROCHESTER

Description of Work: The project consists of constructing bit. concrete and concrete sidewalks, bit. conc. paving, vertical granite curbing, water and drainage utility work, earthwork, and surface restoration.

Job Location: Rt 28-Cranberry Hwy & RT 58-County Rd, Rochester

Information about Prevailing Wage Schedules for Awarding Authorities and Contractors

- **The wage rates will remain in effect for the duration of the project, except in the case of multi-year public construction projects. For construction projects lasting longer than one year, awarding authorities must request an updated wage schedule no later than two weeks before the anniversary of the date the contract was executed by the awarding authority and the general contractor.** For multi-year CM AT RISK projects, the awarding authority must request an annual update no later than two weeks before the anniversary date, determined as the earlier of: (a) the execution date of the GMP Amendment, or (b) the execution date of the first amendment to permit procurement of construction services. The annual update requirement is not applicable to 27F "rental of equipment" contracts. **The updated wage schedule must be provided to all contractors, including general and sub-contractors, working on the construction project.**
- This wage schedule applies only to the specific project referenced at the top of this page and uniquely identified by the "Wage Request Number" on all pages of this schedule.
- An Awarding Authority must request an updated wage schedule if it has not opened bids or selected a contractor within 90 days of the date of issuance of the wage schedule. For CM AT RISK projects (bid pursuant to G.L. c.149A), the earlier of: (a) the execution date of the GMP Amendment, or (b) the bid for the first construction scope of work must be within 90-days of the wage schedule issuance date.
- The wage schedule shall be incorporated in any advertisement or call for bids for the project as required by M.G.L. c. 149, § 27. The wage schedule shall be made a part of the contract awarded for the project. The wage schedule must be posted in a conspicuous place at the work site for the life of the project in accordance with M.G.L. c. 149 § 27. The wages listed on the wage schedule must be paid to employees performing construction work on the project whether they are employed by the prime contractor, a filed sub-bidder, or a sub-contractor.
- Apprentices working on the project are required to be registered with the Massachusetts Division of Apprentice Standards (DAS). Apprentices must keep their apprentice identification card on their persons during all work hours on the project. An apprentice registered with DAS may be paid the lower apprentice wage rate at the applicable step as provided on the prevailing wage schedule. **Any apprentice not registered with DAS regardless of whether they are registered with another federal, state, local, or private agency must be paid the journeyworker's rate.**
- Every contractor or subcontractor working on the construction project must submit weekly payroll reports and a Statement of Compliance directly to the awarding authority by mail or email and keep them on file for three years. Each weekly payroll report must contain: the employee's name, address, occupational classification, hours worked, and wages paid. Do not submit weekly payroll reports to DLS. For a sample payroll reporting form go to http://www.mass.gov/dols/pw.
- Contractors with questions about the wage rates or classifications included on the wage schedule have an affirmative obligation to inquire with DLS at (617) 626-6953.
- Contractors must obtain the wage schedules from awarding authorities. Failure of a contractor or subcontractor to pay the prevailing wage rates listed on the wage schedule to all employees who perform construction work on the project is a violation of the law and subjects the contractor or subcontractor to civil and criminal penalties.
- Employees not receiving the prevailing wage rate set forth on the wage schedule may file a complaint with the Fair Labor Division of the office of the Attorney General at (617) 727-3465.

Issue Date: 02/17/2023 **Wage Request Number:** 20230216-074

Classification	Effective Date	Base Wage	Health	Pension	Supplemental Unemployment	Total Rate
Construction						
(2 AXLE) DRIVER - EQUIPMENT *TEAMSTERS JOINT COUNCIL NO. 10 ZONE B*	12/01/2021	$35.95	$13.41	$16.01	$0.00	$65.37
(3 AXLE) DRIVER - EQUIPMENT *TEAMSTERS JOINT COUNCIL NO. 10 ZONE B*	12/01/2021	$36.02	$13.41	$16.01	$0.00	$65.44
(4 & 5 AXLE) DRIVER - EQUIPMENT *TEAMSTERS JOINT COUNCIL NO. 10 ZONE B*	12/01/2021	$36.14	$13.41	$16.01	$0.00	$65.56
ADS/SUBMERSIBLE PILOT *PILE DRIVER LOCAL 56 (ZONE 1)*	08/01/2020	$103.05	$9.40	$23.12	$0.00	$135.57
For apprentice rates see "Apprentice- PILE DRIVER"						
AIR TRACK OPERATOR *LABORERS - ZONE 2*	12/01/2022	$37.91	$9.10	$16.64	$0.00	$63.65
	06/01/2023	$38.81	$9.10	$16.64	$0.00	$64.55
	12/01/2023	$39.71	$9.10	$16.64	$0.00	$65.45
For apprentice rates see "Apprentice- LABORER"						
AIR TRACK OPERATOR (HEAVY & HIGHWAY) *LABORERS - ZONE 2 (HEAVY & HIGHWAY)*	12/01/2022	$37.31	$9.35	$16.89	$0.00	$63.55
	06/01/2023	$38.21	$9.35	$16.89	$0.00	$64.45
	12/01/2023	$39.11	$9.35	$16.89	$0.00	$65.35
	06/01/2024	$40.44	$9.35	$16.89	$0.00	$66.68
	12/01/2024	$41.77	$9.35	$16.89	$0.00	$68.01
	06/01/2025	$43.16	$9.35	$16.89	$0.00	$69.40
	12/01/2025	$44.54	$9.35	$16.89	$0.00	$70.78
	06/01/2026	$45.98	$9.35	$16.89	$0.00	$72.22
	12/01/2026	$47.42	$9.35	$16.89	$0.00	$73.66
For apprentice rates see "Apprentice- LABORER (Heavy and Highway)"						
ASBESTOS WORKER (PIPES & TANKS) *HEAT & FROST INSULATORS LOCAL 6 (SOUTHERN MASS)*	12/01/2020	$38.10	$12.80	$9.45	$0.00	$60.35
ASPHALT RAKER *LABORERS - ZONE 2*	12/01/2022	$37.41	$9.10	$16.64	$0.00	$63.15
	06/01/2023	$38.31	$9.10	$16.64	$0.00	$64.05
	12/01/2023	$39.21	$9.10	$16.64	$0.00	$64.95
For apprentice rates see "Apprentice- LABORER"						
ASPHALT RAKER (HEAVY & HIGHWAY) *LABORERS - ZONE 2 (HEAVY & HIGHWAY)*	12/01/2022	$36.81	$9.35	$16.89	$0.00	$63.05
	06/01/2023	$37.71	$9.35	$16.89	$0.00	$63.95
	12/01/2023	$38.61	$9.35	$16.89	$0.00	$64.85
	06/01/2024	$39.94	$9.35	$16.89	$0.00	$66.18
	12/01/2024	$41.27	$9.35	$16.89	$0.00	$67.51
	06/01/2025	$42.66	$9.35	$16.89	$0.00	$68.90
	12/01/2025	$44.04	$9.35	$16.89	$0.00	$70.28
	06/01/2026	$45.48	$9.35	$16.89	$0.00	$71.72
	12/01/2026	$46.92	$9.35	$16.89	$0.00	$73.16
For apprentice rates see "Apprentice- LABORER (Heavy and Highway)"						

Classification	Effective Date	Base Wage	Health	Pension	Supplemental Unemployment	Total Rate
ASPHALT/CONCRETE/CRUSHER PLANT-ON SITE *OPERATING ENGINEERS LOCAL 4*	12/01/2022	$53.63	$14.25	$16.05	$0.00	$83.93
	06/01/2023	$54.88	$14.25	$16.05	$0.00	$85.18
	12/01/2023	$56.13	$14.25	$16.05	$0.00	$86.43
	06/01/2024	$57.43	$14.25	$16.05	$0.00	$87.73
	12/01/2024	$58.88	$14.25	$16.05	$0.00	$89.18
	06/01/2025	$60.18	$14.25	$16.05	$0.00	$90.48
	12/01/2025	$61.63	$14.25	$16.05	$0.00	$91.93
	06/01/2026	$62.93	$14.25	$16.05	$0.00	$93.23
	12/01/2026	$64.38	$14.25	$16.05	$0.00	$94.68
For apprentice rates see "Apprentice- OPERATING ENGINEERS"						
BACKHOE/FRONT-END LOADER *OPERATING ENGINEERS LOCAL 4*	12/01/2022	$53.63	$14.25	$16.05	$0.00	$83.93
	06/01/2023	$54.88	$14.25	$16.05	$0.00	$85.18
	12/01/2023	$56.13	$14.25	$16.05	$0.00	$86.43
	06/01/2024	$57.43	$14.25	$16.05	$0.00	$87.73
	12/01/2024	$58.88	$14.25	$16.05	$0.00	$89.18
	06/01/2025	$60.18	$14.25	$16.05	$0.00	$90.48
	12/01/2025	$61.63	$14.25	$16.05	$0.00	$91.93
	06/01/2026	$62.93	$14.25	$16.05	$0.00	$93.23
	12/01/2026	$64.38	$14.25	$16.05	$0.00	$94.68
For apprentice rates see "Apprentice- OPERATING ENGINEERS"						
BARCO-TYPE JUMPING TAMPER *LABORERS - ZONE 2*	12/01/2022	$37.41	$9.10	$16.64	$0.00	$63.15
	06/01/2023	$38.31	$9.10	$16.64	$0.00	$64.05
	12/01/2023	$39.21	$9.10	$16.64	$0.00	$64.95
For apprentice rates see "Apprentice- LABORER"						
BLOCK PAVER, RAMMER / CURB SETTER *LABORERS - ZONE 2*	12/01/2022	$37.91	$9.10	$16.64	$0.00	$63.65
	06/01/2023	$38.81	$9.10	$16.64	$0.00	$64.55
	12/01/2023	$39.71	$9.10	$16.64	$0.00	$65.45
For apprentice rates see "Apprentice- LABORER"						
BLOCK PAVER, RAMMER / CURB SETTER (HEAVY & HIGHWAY) *LABORERS - ZONE 2 (HEAVY & HIGHWAY)*	12/01/2022	$37.31	$9.35	$16.89	$0.00	$63.55
	06/01/2023	$38.21	$9.35	$16.89	$0.00	$64.45
	12/01/2023	$39.11	$9.35	$16.89	$0.00	$65.35
	06/01/2024	$40.44	$9.35	$16.89	$0.00	$66.68
	12/01/2024	$41.77	$9.35	$16.89	$0.00	$68.01
	06/01/2025	$43.16	$9.35	$16.89	$0.00	$69.40
	12/01/2025	$44.54	$9.35	$16.89	$0.00	$70.78
	06/01/2026	$45.98	$9.35	$16.89	$0.00	$72.22
	12/01/2026	$47.42	$9.35	$16.89	$0.00	$73.66
For apprentice rates see "Apprentice- LABORER (Heavy and Highway)"						
BOILER MAKER *BOILERMAKERS LOCAL 29*	01/01/2023	$47.37	$7.07	$20.31	$0.00	$74.75
	01/01/2024	$48.12	$7.07	$20.60	$0.00	$75.79

Classification	Effective Date	Base Wage	Health	Pension	Supplemental Unemployment	Total Rate

Apprentice - *BOILERMAKER - Local 29*

Effective Date - 01/01/2023

Step	percent	Apprentice Base Wage	Health	Pension	Supplemental Unemployment	Total Rate
1	65	$30.79	$7.07	$13.22	$0.00	$51.08
2	65	$30.79	$7.07	$13.22	$0.00	$51.08
3	70	$33.16	$7.07	$14.23	$0.00	$54.46
4	75	$35.53	$7.07	$15.24	$0.00	$57.84
5	80	$37.90	$7.07	$16.25	$0.00	$61.22
6	85	$40.26	$7.07	$17.28	$0.00	$64.61
7	90	$42.63	$7.07	$18.28	$0.00	$67.98
8	95	$45.00	$7.07	$19.32	$0.00	$71.39

Effective Date - 01/01/2024

Step	percent	Apprentice Base Wage	Health	Pension	Supplemental Unemployment	Total Rate
1	65	$31.28	$7.07	$13.22	$0.00	$51.57
2	65	$31.28	$7.07	$13.22	$0.00	$51.57
3	70	$33.68	$7.07	$14.23	$0.00	$54.98
4	75	$36.09	$7.07	$15.24	$0.00	$58.40
5	80	$38.50	$7.07	$16.25	$0.00	$61.82
6	85	$40.90	$7.07	$17.28	$0.00	$65.25
7	90	$43.31	$7.07	$18.28	$0.00	$68.66
8	95	$45.71	$7.07	$19.32	$0.00	$72.10

Notes:

Apprentice to Journeyworker Ratio:1:4

BRICK/STONE/ARTIFICIAL MASONRY (INCL. MASONRY WATERPROOFING) *BRICKLAYERS LOCAL 3 (NEW BEDFORD)*	02/01/2023	$60.35	$11.49	$22.34	$0.00	$94.18
	08/01/2023	$62.40	$11.49	$22.34	$0.00	$96.23
	02/01/2024	$63.65	$11.49	$22.34	$0.00	$97.48
	08/01/2024	$65.75	$11.49	$22.34	$0.00	$99.58
	02/01/2025	$67.05	$11.49	$22.34	$0.00	$100.88
	08/01/2025	$69.20	$11.49	$22.34	$0.00	$103.03
	02/01/2026	$70.55	$11.49	$22.34	$0.00	$104.38
	08/01/2026	$72.75	$11.49	$22.34	$0.00	$106.58
	02/01/2027	$74.15	$11.49	$22.34	$0.00	$107.98

Classification	Effective Date	Base Wage	Health	Pension	Supplemental Unemployment	Total Rate

Apprentice - *BRICK/PLASTER/CEMENT MASON - Local 3 New Bedford*

Effective Date - 02/01/2023

Step	percent	Apprentice Base Wage	Health	Pension	Supplemental Unemployment	Total Rate
1	50	$30.18	$11.49	$22.34	$0.00	$64.01
2	60	$36.21	$11.49	$22.34	$0.00	$70.04
3	70	$42.25	$11.49	$22.34	$0.00	$76.08
4	80	$48.28	$11.49	$22.34	$0.00	$82.11
5	90	$54.32	$11.49	$22.34	$0.00	$88.15

Effective Date - 08/01/2023

Step	percent	Apprentice Base Wage	Health	Pension	Supplemental Unemployment	Total Rate
1	50	$31.20	$11.49	$22.34	$0.00	$65.03
2	60	$37.44	$11.49	$22.34	$0.00	$71.27
3	70	$43.68	$11.49	$22.34	$0.00	$77.51
4	80	$49.92	$11.49	$22.34	$0.00	$83.75
5	90	$56.16	$11.49	$22.34	$0.00	$89.99

Notes:

Apprentice to Journeyworker Ratio:1:5

BULLDOZER/GRADER/SCRAPER *OPERATING ENGINEERS LOCAL 4*	12/01/2022	$53.05	$14.25	$16.05	$0.00	$83.35
	06/01/2023	$54.29	$14.25	$16.05	$0.00	$84.59
	12/01/2023	$55.53	$14.25	$16.05	$0.00	$85.83
	06/01/2024	$56.81	$14.25	$16.05	$0.00	$87.11
	12/01/2024	$58.25	$14.25	$16.05	$0.00	$88.55
	06/01/2025	$59.53	$14.25	$16.05	$0.00	$89.83
	12/01/2025	$60.97	$14.25	$16.05	$0.00	$91.27
	06/01/2026	$62.25	$14.25	$16.05	$0.00	$92.55
	12/01/2026	$63.69	$14.25	$16.05	$0.00	$93.99

For apprentice rates see "Apprentice- OPERATING ENGINEERS"

CAISSON & UNDERPINNING BOTTOM MAN *LABORERS - FOUNDATION AND MARINE*	12/01/2022	$43.73	$9.35	$17.97	$0.00	$71.05
	06/01/2023	$44.73	$9.35	$17.97	$0.00	$72.05
	12/01/2023	$45.98	$9.35	$17.97	$0.00	$73.30
	06/01/2024	$47.46	$9.35	$17.97	$0.00	$74.78
	12/01/2024	$48.93	$9.35	$17.97	$0.00	$76.25
	06/01/2025	$50.43	$9.35	$17.97	$0.00	$77.75
	12/01/2025	$51.93	$9.35	$17.97	$0.00	$79.25
	06/01/2026	$53.48	$9.35	$17.97	$0.00	$80.80
	12/01/2026	$54.98	$9.35	$17.97	$0.00	$82.30

For apprentice rates see "Apprentice- LABORER"

Classification	Effective Date	Base Wage	Health	Pension	Supplemental Unemployment	Total Rate
CAISSON & UNDERPINNING LABORER *LABORERS - FOUNDATION AND MARINE*	12/01/2022	$42.58	$9.35	$17.97	$0.00	$69.90
	06/01/2023	$43.58	$9.35	$17.97	$0.00	$70.90
	12/01/2023	$44.83	$9.35	$17.97	$0.00	$72.15
	06/01/2024	$46.31	$9.35	$17.97	$0.00	$73.63
	12/01/2024	$47.78	$9.35	$17.97	$0.00	$75.10
	06/01/2025	$49.28	$9.35	$17.97	$0.00	$76.60
	12/01/2025	$50.78	$9.35	$17.97	$0.00	$78.10
	06/01/2026	$52.33	$9.35	$17.97	$0.00	$79.65
	12/01/2026	$53.83	$9.35	$17.97	$0.00	$81.15
For apprentice rates see "Apprentice- LABORER"						
CAISSON & UNDERPINNING TOP MAN *LABORERS - FOUNDATION AND MARINE*	12/01/2022	$42.58	$9.35	$17.97	$0.00	$69.90
	06/01/2023	$43.58	$9.35	$17.97	$0.00	$70.90
	12/01/2023	$44.83	$9.35	$17.97	$0.00	$72.15
	06/01/2024	$46.31	$9.35	$17.97	$0.00	$73.63
	12/01/2024	$47.78	$9.35	$17.97	$0.00	$75.10
	06/01/2025	$49.28	$9.35	$17.97	$0.00	$76.60
	12/01/2025	$50.78	$9.35	$17.97	$0.00	$78.10
	06/01/2026	$52.33	$9.35	$17.97	$0.00	$79.65
	12/01/2026	$53.83	$9.35	$17.97	$0.00	$81.15
For apprentice rates see "Apprentice- LABORER"						
CARBIDE CORE DRILL OPERATOR *LABORERS - ZONE 2*	12/01/2022	$37.41	$9.10	$16.64	$0.00	$63.15
	06/01/2023	$38.31	$9.10	$16.64	$0.00	$64.05
	12/01/2023	$39.21	$9.10	$16.64	$0.00	$64.95
For apprentice rates see "Apprentice- LABORER"						
CARPENTER *CARPENTERS -ZONE 2 (Eastern Massachusetts)*	09/01/2022	$45.18	$8.68	$19.97	$0.00	$73.83
	03/01/2023	$45.78	$8.68	$19.97	$0.00	$74.43

Classification	Effective Date	Base Wage	Health	Pension	Supplemental Unemployment	Total Rate

Apprentice - *CARPENTER - Zone 2 Eastern MA*

Effective Date - 09/01/2022

Step	percent	Apprentice Base Wage	Health	Pension	Supplemental Unemployment	Total Rate
1	50	$22.59	$8.68	$1.73	$0.00	$33.00
2	60	$27.11	$8.68	$1.73	$0.00	$37.52
3	70	$31.63	$8.68	$14.78	$0.00	$55.09
4	75	$33.89	$8.68	$14.78	$0.00	$57.35
5	80	$36.14	$8.68	$16.51	$0.00	$61.33
6	80	$36.14	$8.68	$16.51	$0.00	$61.33
7	90	$40.66	$8.68	$18.24	$0.00	$67.58
8	90	$40.66	$8.68	$18.24	$0.00	$67.58

Effective Date - 03/01/2023

Step	percent	Apprentice Base Wage	Health	Pension	Supplemental Unemployment	Total Rate
1	50	$22.89	$8.68	$1.73	$0.00	$33.30
2	60	$27.47	$8.68	$1.73	$0.00	$37.88
3	70	$32.05	$8.68	$14.78	$0.00	$55.51
4	75	$34.34	$8.68	$14.78	$0.00	$57.80
5	80	$36.62	$8.68	$16.51	$0.00	$61.81
6	80	$36.62	$8.68	$16.51	$0.00	$61.81
7	90	$41.20	$8.68	$18.24	$0.00	$68.12
8	90	$41.20	$8.68	$18.24	$0.00	$68.12

Notes:

% Indentured After 10/1/17; 45/45/55/55/70/70/80/80
Step 1&2 $30.71/ 3&4 $36.93/ 5&6 $56.82/ 7&8 $63.06

Apprentice to Journeyworker Ratio:1:5

CARPENTER WOOD FRAME *CARPENTERS-ZONE 3 (Wood Frame)*	04/01/2022	$23.66	$7.21	$4.80	$0.00	$35.67
	04/01/2023	$24.16	$7.21	$4.80	$0.00	$36.17

All Aspects of New Wood Frame Work

Classification	Effective Date	Base Wage	Health	Pension	Supplemental Unemployment	Total Rate

Apprentice - *CARPENTER (Wood Frame) - Zone 3*

Effective Date - 04/01/2022

Step	percent	Apprentice Base Wage	Health	Pension	Supplemental Unemployment	Total Rate
1	60	$14.20	$7.21	$0.00	$0.00	$21.41
2	60	$14.20	$7.21	$0.00	$0.00	$21.41
3	65	$15.38	$7.21	$0.00	$0.00	$22.59
4	70	$16.56	$7.21	$0.00	$0.00	$23.77
5	75	$17.75	$7.21	$3.80	$0.00	$28.76
6	80	$18.93	$7.21	$3.80	$0.00	$29.94
7	85	$20.11	$7.21	$3.80	$0.00	$31.12
8	90	$21.29	$7.21	$3.80	$0.00	$32.30

Effective Date - 04/01/2023

Step	percent	Apprentice Base Wage	Health	Pension	Supplemental Unemployment	Total Rate
1	60	$14.50	$7.21	$0.00	$0.00	$21.71
2	60	$14.50	$7.21	$0.00	$0.00	$21.71
3	65	$15.70	$7.21	$0.00	$0.00	$22.91
4	70	$16.91	$7.21	$0.00	$0.00	$24.12
5	75	$18.12	$7.21	$3.80	$0.00	$29.13
6	80	$19.33	$7.21	$3.80	$0.00	$30.34
7	85	$20.54	$7.21	$3.80	$0.00	$31.55
8	90	$21.74	$7.21	$3.80	$0.00	$32.75

Notes:

% Indentured After 10/1/17; 45/45/55/55/70/70/80/80
Step 1&2 $17.86/ 3&4 $20.22/ 5&6 $27.57/ 7&8 $29.94

Apprentice to Journeyworker Ratio:1:5

CEMENT MASONRY/PLASTERING *BRICKLAYERS LOCAL 3 (NEW BEDFORD)*	01/01/2023	$49.45	$12.75	$22.74	$0.87	$85.81
	07/01/2023	$50.59	$12.75	$22.74	$0.87	$86.95
	01/01/2024	$51.73	$12.75	$22.74	$0.87	$88.09

Classification	Effective Date	Base Wage	Health	Pension	Supplemental Unemployment	Total Rate

Apprentice - *CEMENT MASONRY/PLASTERING - Eastern Mass (New Bedford)*

Effective Date - 01/01/2023

Step	percent	Apprentice Base Wage	Health	Pension	Supplemental Unemployment	Total Rate
1	50	$24.73	$12.75	$15.49	$0.00	$52.97
2	60	$29.67	$12.75	$22.74	$0.87	$66.03
3	65	$32.14	$12.75	$22.74	$0.87	$68.50
4	70	$34.62	$12.75	$22.74	$0.87	$70.98
5	75	$37.09	$12.75	$22.74	$0.87	$73.45
6	80	$39.56	$12.75	$22.74	$0.87	$75.92
7	90	$44.51	$12.75	$22.74	$0.87	$80.87

Effective Date - 07/01/2023

Step	percent	Apprentice Base Wage	Health	Pension	Supplemental Unemployment	Total Rate
1	50	$25.30	$12.75	$15.49	$0.00	$53.54
2	60	$30.35	$12.75	$22.74	$0.87	$66.71
3	65	$32.88	$12.75	$22.74	$0.87	$69.24
4	70	$35.41	$12.75	$22.74	$0.87	$71.77
5	75	$37.94	$12.75	$22.74	$0.87	$74.30
6	80	$40.47	$12.75	$22.74	$0.87	$76.83
7	90	$45.53	$12.75	$22.74	$0.87	$81.89

Notes:

Steps 3,4 are 500 hrs. All other steps are 1,000 hrs.

Apprentice to Journeyworker Ratio:1:3

CHAIN SAW OPERATOR *LABORERS - ZONE 2*	12/01/2022	$37.41	$9.10	$16.64	$0.00	$63.15
	06/01/2023	$38.31	$9.10	$16.64	$0.00	$64.05
	12/01/2023	$39.21	$9.10	$16.64	$0.00	$64.95

For apprentice rates see "Apprentice- LABORER"

CLAM SHELLS/SLURRY BUCKETS/HEADING MACHINES *OPERATING ENGINEERS LOCAL 4*	12/01/2022	$54.68	$14.25	$16.05	$0.00	$84.98
	06/01/2023	$55.95	$14.25	$16.05	$0.00	$86.25
	12/01/2023	$57.23	$14.25	$16.05	$0.00	$87.53
	06/01/2024	$58.55	$14.25	$16.05	$0.00	$88.85
	12/01/2024	$60.03	$14.25	$16.05	$0.00	$90.33
	06/01/2025	$61.36	$14.25	$16.05	$0.00	$91.66
	12/01/2025	$62.83	$14.25	$16.05	$0.00	$93.13
	06/01/2026	$64.16	$14.25	$16.05	$0.00	$94.46
	12/01/2026	$65.64	$14.25	$16.05	$0.00	$95.94

For apprentice rates see "Apprentice- OPERATING ENGINEERS"

Classification	Effective Date	Base Wage	Health	Pension	Supplemental Unemployment	Total Rate
COMPRESSOR OPERATOR *OPERATING ENGINEERS LOCAL 4*	12/01/2022	$35.08	$14.25	$16.05	$0.00	$65.38
	06/01/2023	$35.90	$14.25	$16.05	$0.00	$66.20
	12/01/2023	$36.72	$14.25	$16.05	$0.00	$67.02
	06/01/2024	$37.57	$14.25	$16.05	$0.00	$67.87
	12/01/2024	$38.52	$14.25	$16.05	$0.00	$68.82
	06/01/2025	$39.37	$14.25	$16.05	$0.00	$69.67
	12/01/2025	$40.32	$14.25	$16.05	$0.00	$70.62
	06/01/2026	$41.18	$14.25	$16.05	$0.00	$71.48
	12/01/2026	$42.13	$14.25	$16.05	$0.00	$72.43
For apprentice rates see "Apprentice- OPERATING ENGINEERS"						
DELEADER (BRIDGE) *PAINTERS LOCAL 35 - ZONE 2*	01/01/2023	$56.06	$8.65	$23.05	$0.00	$87.76
	07/01/2023	$57.26	$8.65	$23.05	$0.00	$88.96
	01/01/2024	$58.46	$8.65	$23.05	$0.00	$90.16
	07/01/2024	$59.66	$8.65	$23.05	$0.00	$91.36
	01/01/2025	$60.86	$8.65	$23.05	$0.00	$92.56

Apprentice - *PAINTER Local 35 - BRIDGES/TANKS*

Effective Date - 01/01/2023

Step	percent	Apprentice Base Wage	Health	Pension	Supplemental Unemployment	Total Rate
1	50	$28.03	$8.65	$0.00	$0.00	$36.68
2	55	$30.83	$8.65	$6.27	$0.00	$45.75
3	60	$33.64	$8.65	$6.84	$0.00	$49.13
4	65	$36.44	$8.65	$7.41	$0.00	$52.50
5	70	$39.24	$8.65	$19.63	$0.00	$67.52
6	75	$42.05	$8.65	$20.20	$0.00	$70.90
7	80	$44.85	$8.65	$20.77	$0.00	$74.27
8	90	$50.45	$8.65	$21.91	$0.00	$81.01

Effective Date - 07/01/2023

Step	percent	Apprentice Base Wage	Health	Pension	Supplemental Unemployment	Total Rate
1	50	$28.63	$8.65	$0.00	$0.00	$37.28
2	55	$31.49	$8.65	$6.27	$0.00	$46.41
3	60	$34.36	$8.65	$6.84	$0.00	$49.85
4	65	$37.22	$8.65	$7.41	$0.00	$53.28
5	70	$40.08	$8.65	$19.63	$0.00	$68.36
6	75	$42.95	$8.65	$20.20	$0.00	$71.80
7	80	$45.81	$8.65	$20.77	$0.00	$75.23
8	90	$51.53	$8.65	$21.91	$0.00	$82.09

Notes:

Steps are 750 hrs.

Apprentice to Journeyworker Ratio:1:1

DEMO: ADZEMAN *LABORERS - ZONE 2*	12/01/2022	$43.33	$9.10	$17.57	$0.00	$70.00
	06/01/2023	$44.33	$9.10	$17.57	$0.00	$71.00
	12/01/2023	$45.58	$9.10	$17.57	$0.00	$72.25

Classification	Effective Date	Base Wage	Health	Pension	Supplemental Unemployment	Total Rate
For apprentice rates see "Apprentice- LABORER"						
DEMO: BACKHOE/LOADER/HAMMER OPERATOR *LABORERS - ZONE 2*	12/01/2022	$44.33	$9.10	$17.57	$0.00	$71.00
	06/01/2023	$45.33	$9.10	$17.57	$0.00	$72.00
	12/01/2023	$46.58	$9.10	$17.57	$0.00	$73.25
For apprentice rates see "Apprentice- LABORER"						
DEMO: BURNERS *LABORERS - ZONE 2*	12/01/2022	$44.08	$9.10	$17.57	$0.00	$70.75
	06/01/2023	$45.08	$9.10	$17.57	$0.00	$71.75
	12/01/2023	$46.33	$9.10	$17.57	$0.00	$73.00
For apprentice rates see "Apprentice- LABORER"						
DEMO: CONCRETE CUTTER/SAWYER *LABORERS - ZONE 2*	12/01/2022	$44.33	$9.10	$17.57	$0.00	$71.00
	06/01/2023	$45.33	$9.10	$17.57	$0.00	$72.00
	12/01/2023	$46.58	$9.10	$17.57	$0.00	$73.25
For apprentice rates see "Apprentice- LABORER"						
DEMO: JACKHAMMER OPERATOR *LABORERS - ZONE 2*	12/01/2022	$44.08	$9.10	$17.57	$0.00	$70.75
	06/01/2023	$45.08	$9.10	$17.57	$0.00	$71.75
	12/01/2023	$46.33	$9.10	$17.57	$0.00	$73.00
For apprentice rates see "Apprentice- LABORER"						
DEMO: WRECKING LABORER *LABORERS - ZONE 2*	12/01/2022	$43.33	$9.10	$17.57	$0.00	$70.00
	06/01/2023	$44.33	$9.10	$17.57	$0.00	$71.00
	12/01/2023	$45.58	$9.10	$17.57	$0.00	$72.25
For apprentice rates see "Apprentice- LABORER"						
DIRECTIONAL DRILL MACHINE OPERATOR *OPERATING ENGINEERS LOCAL 4*	12/01/2022	$53.05	$14.25	$16.05	$0.00	$83.35
	06/01/2023	$54.29	$14.25	$16.05	$0.00	$84.59
	12/01/2023	$55.53	$14.25	$16.05	$0.00	$85.83
	06/01/2024	$56.81	$14.25	$16.05	$0.00	$87.11
	12/01/2024	$58.25	$14.25	$16.05	$0.00	$88.55
	06/01/2025	$59.53	$14.25	$16.05	$0.00	$89.83
	12/01/2025	$60.97	$14.25	$16.05	$0.00	$91.27
	06/01/2026	$62.25	$14.25	$16.05	$0.00	$92.55
	12/01/2026	$63.69	$14.25	$16.05	$0.00	$93.99
For apprentice rates see "Apprentice- OPERATING ENGINEERS"						
DIVER *PILE DRIVER LOCAL 56 (ZONE 1)*	08/01/2020	$68.70	$9.40	$23.12	$0.00	$101.22
For apprentice rates see "Apprentice- PILE DRIVER"						
DIVER TENDER *PILE DRIVER LOCAL 56 (ZONE 1)*	08/01/2020	$49.07	$9.40	$23.12	$0.00	$81.59
For apprentice rates see "Apprentice- PILE DRIVER"						
DIVER TENDER (EFFLUENT) *PILE DRIVER LOCAL 56 (ZONE 1)*	08/01/2020	$73.60	$9.40	$23.12	$0.00	$106.12
For apprentice rates see "Apprentice- PILE DRIVER"						
DIVER/SLURRY (EFFLUENT) *PILE DRIVER LOCAL 56 (ZONE 1)*	08/01/2020	$103.05	$9.40	$23.12	$0.00	$135.57
For apprentice rates see "Apprentice- PILE DRIVER"						
DRAWBRIDGE OPERATOR (Construction) *DRAWBRIDGE - SEIU LOCAL 888*	07/01/2020	$26.77	$6.67	$3.93	$0.16	$37.53
ELECTRICIAN *ELECTRICIANS LOCAL 223*	09/01/2022	$46.35	$11.50	$16.18	$0.00	$74.03
	09/01/2023	$47.87	$11.75	$16.86	$0.00	$76.48

Classification	Effective Date	Base Wage	Health	Pension	Supplemental Unemployment	Total Rate

Apprentice - *ELECTRICIAN - Local 223*

Effective Date - 09/01/2022

Step	percent	Apprentice Base Wage	Health	Pension	Supplemental Unemployment	Total Rate
1	40	$18.54	$11.50	$0.56	$0.00	$30.60
2	45	$20.86	$11.50	$0.63	$0.00	$32.99
3	50	$23.18	$11.50	$0.70	$0.00	$35.38
4	55	$25.49	$11.50	$7.35	$0.00	$44.34
5	60	$27.81	$11.50	$7.86	$0.00	$47.17
6	65	$30.13	$11.50	$8.37	$0.00	$50.00
7	70	$32.45	$11.50	$8.89	$0.00	$52.84
8	75	$34.76	$11.50	$9.40	$0.00	$55.66

Effective Date - 09/01/2023

Step	percent	Apprentice Base Wage	Health	Pension	Supplemental Unemployment	Total Rate
1	40	$19.15	$11.75	$0.57	$0.00	$31.47
2	45	$21.54	$11.75	$0.65	$0.00	$33.94
3	50	$23.94	$11.75	$0.72	$0.00	$36.41
4	55	$26.33	$11.75	$7.79	$0.00	$45.87
5	60	$28.72	$11.75	$8.31	$0.00	$48.78
6	65	$31.12	$11.75	$8.65	$0.00	$51.52
7	70	$33.51	$11.75	$9.38	$0.00	$54.64
8	75	$35.90	$11.75	$9.90	$0.00	$57.55

Notes:

Apprentice to Journeyworker Ratio:2:3***

ELEVATOR CONSTRUCTOR *ELEVATOR CONSTRUCTORS LOCAL 4*	01/01/2022	$65.62	$16.03	$20.21	$0.00	$101.86

Apprentice - *ELEVATOR CONSTRUCTOR - Local 4*

Effective Date - 01/01/2022

Step	percent	Apprentice Base Wage	Health	Pension	Supplemental Unemployment	Total Rate
1	50	$32.81	$16.03	$0.00	$0.00	$48.84
2	55	$36.09	$16.03	$20.21	$0.00	$72.33
3	65	$42.65	$16.03	$20.21	$0.00	$78.89
4	70	$45.93	$16.03	$20.21	$0.00	$82.17
5	80	$52.50	$16.03	$20.21	$0.00	$88.74

Notes:

Steps 1-2 are 6 mos.; Steps 3-5 are 1 year

Apprentice to Journeyworker Ratio:1:1

ELEVATOR CONSTRUCTOR HELPER *ELEVATOR CONSTRUCTORS LOCAL 4*	01/01/2022	$45.93	$16.03	$20.21	$0.00	$82.17

Classification	Effective Date	Base Wage	Health	Pension	Supplemental Unemployment	Total Rate
For apprentice rates see "Apprentice - ELEVATOR CONSTRUCTOR"						
FENCE & GUARD RAIL ERECTOR (HEAVY & HIGHWAY) *LABORERS - ZONE 2 (HEAVY & HIGHWAY)*	12/01/2022	$36.81	$9.35	$16.89	$0.00	$63.05
	06/01/2023	$37.71	$9.35	$16.89	$0.00	$63.95
	12/01/2023	$38.61	$9.35	$16.89	$0.00	$64.85
	06/01/2024	$39.94	$9.35	$16.89	$0.00	$66.18
	12/01/2024	$41.27	$9.35	$16.89	$0.00	$67.51
	06/01/2025	$42.66	$9.35	$16.89	$0.00	$68.90
	12/01/2025	$44.04	$9.35	$16.89	$0.00	$70.28
	06/01/2026	$45.48	$9.35	$16.89	$0.00	$71.72
	12/01/2026	$46.92	$9.35	$16.89	$0.00	$73.16
For apprentice rates see "Apprentice- LABORER (Heavy and Highway)						
FIELD ENG.INST.PERSON-BLDG,SITE,HVY/HWY *OPERATING ENGINEERS LOCAL 4*	11/05/2022	$48.67	$14.25	$16.05	$0.00	$78.97
	05/01/2023	$49.91	$14.25	$16.05	$0.00	$80.21
	11/01/2023	$51.15	$14.25	$16.05	$0.00	$81.45
	05/01/2024	$52.39	$14.25	$16.05	$0.00	$82.69
	11/01/2024	$53.68	$14.25	$16.05	$0.00	$83.98
	05/01/2025	$55.12	$14.25	$16.05	$0.00	$85.42
	11/01/2025	$56.41	$14.25	$16.05	$0.00	$86.71
	05/01/2026	$57.85	$14.25	$16.05	$0.00	$88.15
	11/01/2026	$59.14	$14.25	$16.05	$0.00	$89.44
	05/01/2027	$60.57	$14.25	$16.05	$0.00	$90.87
For apprentice rates see "Apprentice- OPERATING ENGINEERS"						
FIELD ENG.PARTY CHIEF-BLDG,SITE,HVY/HWY *OPERATING ENGINEERS LOCAL 4*	11/01/2022	$50.22	$14.25	$16.05	$0.00	$80.52
	05/01/2023	$51.47	$14.25	$16.05	$0.00	$81.77
	11/01/2023	$52.72	$14.25	$16.05	$0.00	$83.02
	05/01/2024	$53.97	$14.25	$16.05	$0.00	$84.27
	11/01/2024	$55.27	$14.25	$16.05	$0.00	$85.57
	05/01/2025	$56.72	$14.25	$16.05	$0.00	$87.02
	11/01/2025	$58.02	$14.25	$16.05	$0.00	$88.32
	05/01/2026	$59.47	$14.25	$16.05	$0.00	$89.77
	11/01/2026	$60.77	$14.25	$16.05	$0.00	$91.07
	05/01/2027	$62.22	$14.25	$16.05	$0.00	$92.52
For apprentice rates see "Apprentice- OPERATING ENGINEERS"						
FIELD ENG.ROD PERSON-BLDG,SITE,HVY/HWY *OPERATING ENGINEERS LOCAL 4*	11/01/2022	$24.31	$14.25	$16.05	$0.00	$54.61
	05/01/2023	$25.05	$14.25	$16.05	$0.00	$55.35
	11/01/2023	$25.78	$14.25	$16.05	$0.00	$56.08
	05/01/2024	$26.51	$14.25	$16.05	$0.00	$56.81
	11/01/2024	$27.27	$14.25	$16.05	$0.00	$57.57
	05/01/2025	$28.12	$14.25	$16.05	$0.00	$58.42
	11/01/2025	$28.88	$14.25	$16.05	$0.00	$59.18
	05/01/2026	$29.73	$14.25	$16.05	$0.00	$60.03
	11/01/2026	$30.49	$14.25	$16.05	$0.00	$60.79
	05/01/2027	$31.34	$14.25	$16.05	$0.00	$61.64
For apprentice rates see "Apprentice- OPERATING ENGINEERS"						
FIRE ALARM INSTALLER *ELECTRICIANS LOCAL 223*	09/01/2020	$43.66	$10.90	$14.66	$0.00	$69.22
For apprentice rates see "Apprentice- ELECTRICIAN"						

Classification	Effective Date	Base Wage	Health	Pension	Supplemental Unemployment	Total Rate
FIRE ALARM REPAIR / MAINTENANCE / COMMISSIONING *ELECTRICIANS* *LOCAL 223*	09/01/2020	$36.86	$10.90	$12.45	$0.00	$60.21
For apprentice rates see "Apprentice- TELECOMMUNICATIONS TECHNICIAN"						
FIREMAN (ASST. ENGINEER) *OPERATING ENGINEERS LOCAL 4*	12/01/2022	$43.54	$14.25	$16.05	$0.00	$73.84
	06/01/2023	$44.56	$14.25	$16.05	$0.00	$74.86
	12/01/2023	$45.57	$14.25	$16.05	$0.00	$75.87
	06/01/2024	$46.63	$14.25	$16.05	$0.00	$76.93
	12/01/2024	$47.81	$14.25	$16.05	$0.00	$78.11
	06/01/2025	$48.87	$14.25	$16.05	$0.00	$79.17
	12/01/2025	$50.04	$14.25	$16.05	$0.00	$80.34
	06/01/2026	$51.10	$14.25	$16.05	$0.00	$81.40
	12/01/2026	$52.28	$14.25	$16.05	$0.00	$82.58
For apprentice rates see "Apprentice- OPERATING ENGINEERS"						
FLAGGER & SIGNALER (HEAVY & HIGHWAY) *LABORERS - ZONE 2 (HEAVY & HIGHWAY)*	12/01/2022	$25.23	$9.35	$16.89	$0.00	$51.47
	06/01/2023	$25.98	$9.35	$16.89	$0.00	$52.22
	12/01/2023	$25.98	$9.35	$16.89	$0.00	$52.22
	06/01/2024	$27.01	$9.35	$16.89	$0.00	$53.25
	12/01/2024	$27.01	$9.35	$16.89	$0.00	$53.25
	06/01/2025	$28.09	$9.35	$16.89	$0.00	$54.33
	12/01/2025	$28.09	$9.35	$16.89	$0.00	$54.33
	06/01/2026	$29.21	$9.35	$16.89	$0.00	$55.45
	12/01/2026	$29.21	$9.35	$16.89	$0.00	$55.45
For apprentice rates see "Apprentice- LABORER (Heavy and Highway)"						
FLOORCOVERER *FLOORCOVERERS LOCAL 2168 ZONE I*	03/01/2022	$49.93	$8.68	$20.27	$0.00	$78.88

Apprentice - *FLOORCOVERER - Local 2168 Zone I*

Effective Date - 03/01/2022

Step	percent	Apprentice Base Wage	Health	Pension	Supplemental Unemployment	Total Rate
1	50	$24.97	$8.68	$1.79	$0.00	$35.44
2	55	$27.46	$8.68	$1.79	$0.00	$37.93
3	60	$29.96	$8.68	$14.90	$0.00	$53.54
4	65	$32.45	$8.68	$14.90	$0.00	$56.03
5	70	$34.95	$8.68	$16.69	$0.00	$60.32
6	75	$37.45	$8.68	$16.69	$0.00	$62.82
7	80	$39.94	$8.68	$18.48	$0.00	$67.10
8	85	$42.44	$8.68	$18.48	$0.00	$69.60

Notes: Steps are 750 hrs.
% After 10/1/17; 45/45/55/55/70/70/80/80 (1500hr Steps)
Step 1&2 $32.94/ 3&4 $39.66/ 5&6 $60.32/ 7&8 $67.10

Apprentice to Journeyworker Ratio:1:1

Classification	Effective Date	Base Wage	Health	Pension	Supplemental Unemployment	Total Rate
FORK LIFT/CHERRY PICKER *OPERATING ENGINEERS LOCAL 4*	12/01/2022	$53.63	$14.25	$16.05	$0.00	$83.93
	06/01/2023	$54.88	$14.25	$16.05	$0.00	$85.18
	12/01/2023	$56.13	$14.25	$16.05	$0.00	$86.43
	06/01/2024	$57.43	$14.25	$16.05	$0.00	$87.73
	12/01/2024	$58.88	$14.25	$16.05	$0.00	$89.18
	06/01/2025	$60.18	$14.25	$16.05	$0.00	$90.48
	12/01/2025	$61.63	$14.25	$16.05	$0.00	$91.93
	06/01/2026	$62.93	$14.25	$16.05	$0.00	$93.23
	12/01/2026	$64.38	$14.25	$16.05	$0.00	$94.68
For apprentice rates see "Apprentice- OPERATING ENGINEERS"						
GENERATOR/LIGHTING PLANT/HEATERS *OPERATING ENGINEERS LOCAL 4*	12/01/2022	$35.08	$14.25	$16.05	$0.00	$65.38
	06/01/2023	$35.90	$14.25	$16.05	$0.00	$66.20
	12/01/2023	$36.72	$14.25	$16.05	$0.00	$67.02
	06/01/2024	$37.57	$14.25	$16.05	$0.00	$67.87
	12/01/2024	$38.52	$14.25	$16.05	$0.00	$68.82
	06/01/2025	$39.37	$14.25	$16.05	$0.00	$69.67
	12/01/2025	$40.32	$14.25	$16.05	$0.00	$70.62
	06/01/2026	$41.18	$14.25	$16.05	$0.00	$71.48
	12/01/2026	$42.13	$14.25	$16.05	$0.00	$72.43
For apprentice rates see "Apprentice- OPERATING ENGINEERS"						
GLAZIER (GLASS PLANK/AIR BARRIER/INTERIOR SYSTEMS) *GLAZIERS LOCAL 1333*	06/01/2020	$39.18	$10.80	$10.45	$0.00	$60.43

Apprentice - *GLAZIER - Local 1333*

Effective Date - 06/01/2020

Step	percent	Apprentice Base Wage	Health	Pension	Supplemental Unemployment	Total Rate
1	50	$19.59	$10.80	$1.80	$0.00	$32.19
2	56	$22.04	$10.80	$1.80	$0.00	$34.64
3	63	$24.49	$10.80	$2.45	$0.00	$37.74
4	69	$26.94	$10.80	$2.45	$0.00	$40.19
5	75	$29.39	$10.80	$3.15	$0.00	$43.34
6	81	$31.83	$10.80	$3.15	$0.00	$45.78
7	88	$34.28	$10.80	$10.45	$0.00	$55.53
8	94	$36.73	$10.80	$10.45	$0.00	$57.98

Notes:

Apprentice to Journeyworker Ratio:1:3

Classification	Effective Date	Base Wage	Health	Pension	Supplemental Unemployment	Total Rate
HOISTING ENGINEER/CRANES/GRADALLS *OPERATING ENGINEERS LOCAL 4*	12/01/2022	$53.63	$14.25	$16.05	$0.00	$83.93
	06/01/2023	$54.88	$14.25	$16.05	$0.00	$85.18
	12/01/2023	$56.13	$14.25	$16.05	$0.00	$86.43
	06/01/2024	$57.43	$14.25	$16.05	$0.00	$87.73
	12/01/2024	$58.88	$14.25	$16.05	$0.00	$89.18
	06/01/2025	$60.18	$14.25	$16.05	$0.00	$90.48
	12/01/2025	$61.63	$14.25	$16.05	$0.00	$91.93
	06/01/2026	$62.93	$14.25	$16.05	$0.00	$93.23
	12/01/2026	$64.38	$14.25	$16.05	$0.00	$94.68

Apprentice - *OPERATING ENGINEERS - Local 4*

Effective Date - 12/01/2022

Step	percent	Apprentice Base Wage	Health	Pension	Supplemental Unemployment	Total Rate
1	55	$29.50	$14.25	$0.00	$0.00	$43.75
2	60	$32.18	$14.25	$16.05	$0.00	$62.48
3	65	$34.86	$14.25	$16.05	$0.00	$65.16
4	70	$37.54	$14.25	$16.05	$0.00	$67.84
5	75	$40.22	$14.25	$16.05	$0.00	$70.52
6	80	$42.90	$14.25	$16.05	$0.00	$73.20
7	85	$45.59	$14.25	$16.05	$0.00	$75.89
8	90	$48.27	$14.25	$16.05	$0.00	$78.57

Effective Date - 06/01/2023

Step	percent	Apprentice Base Wage	Health	Pension	Supplemental Unemployment	Total Rate
1	55	$30.18	$14.25	$0.00	$0.00	$44.43
2	60	$32.93	$14.25	$16.05	$0.00	$63.23
3	65	$35.67	$14.25	$16.05	$0.00	$65.97
4	70	$38.42	$14.25	$16.05	$0.00	$68.72
5	75	$41.16	$14.25	$16.05	$0.00	$71.46
6	80	$43.90	$14.25	$16.05	$0.00	$74.20
7	85	$46.65	$14.25	$16.05	$0.00	$76.95
8	90	$49.39	$14.25	$16.05	$0.00	$79.69

Notes:

Apprentice to Journeyworker Ratio:1:6

HVAC (DUCTWORK) *SHEETMETAL WORKERS LOCAL 17 - B*	04/01/2022	$38.91	$13.65	$17.15	$2.09	$71.80

For apprentice rates see "Apprentice- SHEET METAL WORKER"

HVAC (ELECTRICAL CONTROLS) *ELECTRICIANS LOCAL 223*	09/01/2020	$43.66	$10.90	$14.66	$0.00	$69.22

For apprentice rates see "Apprentice- ELECTRICIAN"

HVAC (TESTING AND BALANCING - AIR) *SHEETMETAL WORKERS LOCAL 17 - B*	04/01/2022	$38.91	$13.65	$17.15	$2.09	$71.80

For apprentice rates see "Apprentice- SHEET METAL WORKER"

Classification	Effective Date	Base Wage	Health	Pension	Supplemental Unemployment	Total Rate
HVAC (TESTING AND BALANCING -WATER) *PLUMBERS & PIPEFITTERS LOCAL 51*	08/30/2021	$46.49	$10.15	$19.95	$0.00	$76.59
For apprentice rates see "Apprentice- PIPEFITTER" or "PLUMBER/PIPEFITTER"						
HVAC MECHANIC *PLUMBERS & PIPEFITTERS LOCAL 51*	08/30/2021	$46.49	$10.15	$19.95	$0.00	$76.59
For apprentice rates see "Apprentice- PIPEFITTER" or "PLUMBER/PIPEFITTER"						
HYDRAULIC DRILLS *LABORERS - ZONE 2*	12/01/2022	$37.91	$9.10	$16.64	$0.00	$63.65
	06/01/2023	$38.81	$9.10	$16.64	$0.00	$64.55
	12/01/2023	$39.71	$9.10	$16.64	$0.00	$65.45
For apprentice rates see "Apprentice- LABORER"						
HYDRAULIC DRILLS (HEAVY & HIGHWAY) *LABORERS - ZONE 2 (HEAVY & HIGHWAY)*	12/01/2022	$37.31	$9.35	$16.89	$0.00	$63.55
	06/01/2023	$38.21	$9.35	$16.89	$0.00	$64.45
	12/01/2023	$39.11	$9.35	$16.89	$0.00	$65.35
	06/01/2024	$40.44	$9.35	$16.89	$0.00	$66.68
	12/01/2024	$41.77	$9.35	$16.89	$0.00	$68.01
	06/01/2025	$43.16	$9.35	$16.89	$0.00	$69.40
	12/01/2025	$44.54	$9.35	$16.89	$0.00	$70.78
	06/01/2026	$45.98	$9.35	$16.89	$0.00	$72.22
	12/01/2026	$47.42	$9.35	$16.89	$0.00	$73.66
For apprentice rates see "Apprentice- LABORER (Heavy and Highway)"						
INSULATOR (PIPES & TANKS) *HEAT & FROST INSULATORS LOCAL 6 (SOUTHERN MASS)*	09/01/2022	$48.95	$13.80	$17.14	$0.00	$79.89

Apprentice - *ASBESTOS INSULATOR (Pipes & Tanks) - Local 6 Southern MA*

Effective Date - 09/01/2022

Step	percent	Apprentice Base Wage	Health	Pension	Supplemental Unemployment	Total Rate
1	50	$24.48	$13.80	$12.42	$0.00	$50.70
2	60	$29.37	$13.80	$13.36	$0.00	$56.53
3	70	$34.27	$13.80	$14.31	$0.00	$62.38
4	80	$39.16	$13.80	$15.25	$0.00	$68.21

Notes:

Steps are 1 year

Apprentice to Journeyworker Ratio:1:4

IRONWORKER/WELDER *IRONWORKERS LOCAL 37*	03/16/2021	$42.46	$7.70	$17.10	$0.00	$67.26

Classification	Effective Date	Base Wage	Health	Pension	Supplemental Unemployment	Total Rate

Apprentice - *IRONWORKER - Local 37*

Effective Date - 03/16/2021

Step	percent	Apprentice Base Wage	Health	Pension	Supplemental Unemployment	Total Rate
1	70	$29.72	$7.70	$17.10	$0.00	$54.52
2	75	$31.85	$7.70	$17.10	$0.00	$56.65
3	80	$33.97	$7.70	$17.10	$0.00	$58.77
4	85	$36.09	$7.70	$17.10	$0.00	$60.89
5	90	$38.21	$7.70	$17.10	$0.00	$63.01
6	95	$40.34	$7.70	$17.10	$0.00	$65.14

Notes:

Apprentice to Journeyworker Ratio:1:4

JACKHAMMER & PAVING BREAKER OPERATOR *LABORERS - ZONE 2*	12/01/2022	$37.41	$9.10	$16.64	$0.00	$63.15
	06/01/2023	$38.31	$9.10	$16.64	$0.00	$64.05
	12/01/2023	$39.21	$9.10	$16.64	$0.00	$64.95
For apprentice rates see "Apprentice- LABORER"						
LABORER *LABORERS - ZONE 2*	12/01/2022	$37.16	$9.10	$16.64	$0.00	$62.90
	06/01/2023	$38.06	$9.10	$16.64	$0.00	$63.80
	12/01/2023	$38.96	$9.10	$16.64	$0.00	$64.70

Apprentice - *LABORER - Zone 2*

Effective Date - 12/01/2022

Step	percent	Apprentice Base Wage	Health	Pension	Supplemental Unemployment	Total Rate
1	60	$22.30	$9.10	$16.64	$0.00	$48.04
2	70	$26.01	$9.10	$16.64	$0.00	$51.75
3	80	$29.73	$9.10	$16.64	$0.00	$55.47
4	90	$33.44	$9.10	$16.64	$0.00	$59.18

Effective Date - 06/01/2023

Step	percent	Apprentice Base Wage	Health	Pension	Supplemental Unemployment	Total Rate
1	60	$22.84	$9.10	$16.64	$0.00	$48.58
2	70	$26.64	$9.10	$16.64	$0.00	$52.38
3	80	$30.45	$9.10	$16.64	$0.00	$56.19
4	90	$34.25	$9.10	$16.64	$0.00	$59.99

Notes:

Apprentice to Journeyworker Ratio:1:5

Classification	Effective Date	Base Wage	Health	Pension	Supplemental Unemployment	Total Rate
LABORER (HEAVY & HIGHWAY) *LABORERS - ZONE 2 (HEAVY & HIGHWAY)*	12/01/2022	$36.56	$9.35	$16.89	$0.00	$62.80
	06/01/2023	$37.46	$9.35	$16.89	$0.00	$63.70
	12/01/2023	$38.36	$9.35	$16.89	$0.00	$64.60
	06/01/2024	$39.69	$9.35	$16.89	$0.00	$65.93
	12/01/2024	$41.02	$9.35	$16.89	$0.00	$67.26
	06/01/2025	$42.41	$9.35	$16.89	$0.00	$68.65
	12/01/2025	$43.79	$9.35	$16.89	$0.00	$70.03
	06/01/2026	$45.23	$9.35	$16.89	$0.00	$71.47
	12/01/2026	$46.67	$9.35	$16.89	$0.00	$72.91

Apprentice - *LABORER (Heavy & Highway) - Zone 2*

Effective Date - 12/01/2022

Step	percent	Apprentice Base Wage	Health	Pension	Supplemental Unemployment	Total Rate
1	60	$21.94	$9.35	$16.89	$0.00	$48.18
2	70	$25.59	$9.35	$16.89	$0.00	$51.83
3	80	$29.25	$9.35	$16.89	$0.00	$55.49
4	90	$32.90	$9.35	$16.89	$0.00	$59.14

Effective Date - 06/01/2023

Step	percent	Apprentice Base Wage	Health	Pension	Supplemental Unemployment	Total Rate
1	60	$22.48	$9.35	$16.89	$0.00	$48.72
2	70	$26.22	$9.35	$16.89	$0.00	$52.46
3	80	$29.97	$9.35	$16.89	$0.00	$56.21
4	90	$33.71	$9.35	$16.89	$0.00	$59.95

Notes:

Apprentice to Journeyworker Ratio:1:5

LABORER: CARPENTER TENDER *LABORERS - ZONE 2*	12/01/2022	$37.16	$9.10	$16.64	$0.00	$62.90
	06/01/2023	$38.06	$9.10	$16.64	$0.00	$63.80
	12/01/2023	$38.96	$9.10	$16.64	$0.00	$64.70
For apprentice rates see "Apprentice- LABORER"						
LABORER: CEMENT FINISHER TENDER *LABORERS - ZONE 2*	12/01/2022	$37.16	$9.10	$16.64	$0.00	$62.90
	06/01/2023	$38.06	$9.10	$16.64	$0.00	$63.80
	12/01/2023	$38.96	$9.10	$16.64	$0.00	$64.70
For apprentice rates see "Apprentice- LABORER"						
LABORER: HAZARDOUS WASTE/ASBESTOS REMOVER *LABORERS - ZONE 2*	12/01/2022	$37.25	$9.10	$16.70	$0.00	$63.05
	06/01/2023	$38.15	$9.10	$16.70	$0.00	$63.95
	12/01/2023	$39.05	$9.10	$16.70	$0.00	$64.85
For apprentice rates see "Apprentice- LABORER"						
LABORER: MASON TENDER *LABORERS - ZONE 2*	12/01/2022	$37.41	$9.10	$16.64	$0.00	$63.15
	06/01/2023	$38.31	$9.10	$16.64	$0.00	$64.05
	12/01/2023	$39.21	$9.10	$16.64	$0.00	$64.95
For apprentice rates see "Apprentice- LABORER"						

Classification	Effective Date	Base Wage	Health	Pension	Supplemental Unemployment	Total Rate
LABORER: MASON TENDER (HEAVY & HIGHWAY) *LABORERS - ZONE 2 (HEAVY & HIGHWAY)*	12/01/2022	$36.81	$9.35	$16.89	$0.00	$63.05
	06/01/2023	$37.71	$9.35	$16.89	$0.00	$63.95
	12/01/2023	$38.61	$9.35	$16.89	$0.00	$64.85
	06/01/2024	$39.94	$9.35	$16.89	$0.00	$66.18
	12/01/2024	$41.27	$9.35	$16.89	$0.00	$67.51
	06/01/2025	$42.66	$9.35	$16.89	$0.00	$68.90
	12/01/2025	$44.04	$9.35	$16.89	$0.00	$70.28
	06/01/2026	$45.48	$9.35	$16.89	$0.00	$71.72
	12/01/2026	$46.92	$9.35	$16.89	$0.00	$73.16
For apprentice rates see "Apprentice- LABORER (Heavy and Highway)						
LABORER: MULTI-TRADE TENDER *LABORERS - ZONE 2*	12/01/2022	$37.16	$9.10	$16.64	$0.00	$62.90
	06/01/2023	$38.06	$9.10	$16.64	$0.00	$63.80
	12/01/2023	$38.96	$9.10	$16.64	$0.00	$64.70
For apprentice rates see "Apprentice- LABORER"						
LABORER: TREE REMOVER *LABORERS - ZONE 2*	12/01/2022	$37.16	$9.10	$16.64	$0.00	$62.90
	06/01/2023	$38.06	$9.10	$16.64	$0.00	$63.80
	12/01/2023	$38.96	$9.10	$16.64	$0.00	$64.70
This classification applies to the removal of standing trees, and the trimming and removal of branches and limbs when related to public works construction or site clearance incidental to construction . For apprentice rates see "Apprentice- LABORER"						
LASER BEAM OPERATOR *LABORERS - ZONE 2*	12/01/2022	$37.41	$9.10	$16.64	$0.00	$63.15
	06/01/2023	$38.31	$9.10	$16.64	$0.00	$64.05
	12/01/2023	$39.21	$9.10	$16.64	$0.00	$64.95
For apprentice rates see "Apprentice- LABORER"						
LASER BEAM OPERATOR (HEAVY & HIGHWAY) *LABORERS - ZONE 2 (HEAVY & HIGHWAY)*	12/01/2022	$36.81	$9.35	$16.89	$0.00	$63.05
	06/01/2023	$37.71	$9.35	$16.89	$0.00	$63.95
	12/01/2023	$38.61	$9.35	$16.89	$0.00	$64.85
	06/01/2024	$39.94	$9.35	$16.89	$0.00	$66.18
	12/01/2024	$41.27	$9.35	$16.89	$0.00	$67.51
	06/01/2025	$42.66	$9.35	$16.89	$0.00	$68.90
	12/01/2025	$44.04	$9.35	$16.89	$0.00	$70.28
	06/01/2026	$45.48	$9.35	$16.89	$0.00	$71.72
	12/01/2026	$46.92	$9.35	$16.89	$0.00	$73.16
For apprentice rates see "Apprentice- LABORER (Heavy and Highway)						
MARBLE & TILE FINISHERS *BRICKLAYERS LOCAL 3 - MARBLE & TILE*	02/01/2023	$46.25	$11.49	$20.37	$0.00	$78.11
	08/01/2023	$47.89	$11.49	$20.37	$0.00	$79.75
	02/01/2024	$48.89	$11.49	$20.37	$0.00	$80.75
	08/01/2024	$50.57	$11.49	$20.37	$0.00	$82.43
	02/01/2025	$51.61	$11.49	$20.37	$0.00	$83.47
	08/01/2025	$53.33	$11.49	$20.37	$0.00	$85.19
	02/01/2026	$54.41	$11.49	$20.37	$0.00	$86.27
	08/01/2026	$56.17	$11.49	$20.37	$0.00	$88.03
	02/01/2027	$57.29	$11.49	$20.37	$0.00	$89.15

Classification	Effective Date	Base Wage	Health	Pension	Supplemental Unemployment	Total Rate

Apprentice - *MARBLE & TILE FINISHER - Local 3 Marble & Tile*

Effective Date - 02/01/2023

Step	percent	Apprentice Base Wage	Health	Pension	Supplemental Unemployment	Total Rate
1	50	$23.13	$11.49	$20.37	$0.00	$54.99
2	60	$27.75	$11.49	$20.37	$0.00	$59.61
3	70	$32.38	$11.49	$20.37	$0.00	$64.24
4	80	$37.00	$11.49	$20.37	$0.00	$68.86
5	90	$41.63	$11.49	$20.37	$0.00	$73.49

Effective Date - 08/01/2023

Step	percent	Apprentice Base Wage	Health	Pension	Supplemental Unemployment	Total Rate
1	50	$23.95	$11.49	$20.37	$0.00	$55.81
2	60	$28.73	$11.49	$20.37	$0.00	$60.59
3	70	$33.52	$11.49	$20.37	$0.00	$65.38
4	80	$38.31	$11.49	$20.37	$0.00	$70.17
5	90	$43.10	$11.49	$20.37	$0.00	$74.96

Notes:

Apprentice to Journeyworker Ratio:1:3

MARBLE MASONS,TILELAYERS & TERRAZZO MECH *BRICKLAYERS LOCAL 3 - MARBLE & TILE*	02/01/2023	$60.37	$11.49	$22.31	$0.00	$94.17
	08/01/2023	$62.42	$11.49	$22.31	$0.00	$96.22
	02/01/2024	$63.67	$11.49	$22.31	$0.00	$97.47
	08/01/2024	$65.77	$11.49	$22.31	$0.00	$99.57
	02/01/2025	$67.07	$11.49	$22.31	$0.00	$100.87
	08/01/2025	$69.22	$11.49	$22.31	$0.00	$103.02
	02/01/2026	$70.57	$11.49	$22.31	$0.00	$104.37
	08/01/2026	$72.77	$11.49	$22.31	$0.00	$106.57
	02/01/2027	$74.17	$11.49	$22.31	$0.00	$107.97

Classification	Effective Date	Base Wage	Health	Pension	Supplemental Unemployment	Total Rate

Apprentice - *MARBLE-TILE-TERRAZZO MECHANIC - Local 3 Marble & Tile*

Effective Date - 02/01/2023

Step	percent	Apprentice Base Wage	Health	Pension	Supplemental Unemployment	Total Rate
1	50	$30.19	$11.49	$22.31	$0.00	$63.99
2	60	$36.22	$11.49	$22.31	$0.00	$70.02
3	70	$42.26	$11.49	$22.31	$0.00	$76.06
4	80	$48.30	$11.49	$22.31	$0.00	$82.10
5	90	$54.33	$11.49	$22.31	$0.00	$88.13

Effective Date - 08/01/2023

Step	percent	Apprentice Base Wage	Health	Pension	Supplemental Unemployment	Total Rate
1	50	$31.21	$11.49	$22.31	$0.00	$65.01
2	60	$37.45	$11.49	$22.31	$0.00	$71.25
3	70	$43.69	$11.49	$22.31	$0.00	$77.49
4	80	$49.94	$11.49	$22.31	$0.00	$83.74
5	90	$56.18	$11.49	$22.31	$0.00	$89.98

Notes:

Apprentice to Journeyworker Ratio:1:5

MECH. SWEEPER OPERATOR (ON CONST. SITES) *OPERATING ENGINEERS LOCAL 4*	12/01/2022	$53.05	$14.25	$16.05	$0.00	$83.35
	06/01/2023	$54.29	$14.25	$16.05	$0.00	$84.59
	12/01/2023	$55.53	$14.25	$16.05	$0.00	$85.83
	06/01/2024	$56.81	$14.25	$16.05	$0.00	$87.11
	12/01/2024	$58.25	$14.25	$16.05	$0.00	$88.55
	06/01/2025	$59.53	$14.25	$16.05	$0.00	$89.83
	12/01/2025	$60.97	$14.25	$16.05	$0.00	$91.27
	06/01/2026	$62.25	$14.25	$16.05	$0.00	$92.55
	12/01/2026	$63.69	$14.25	$16.05	$0.00	$93.99
For apprentice rates see "Apprentice- OPERATING ENGINEERS"						
MECHANICS MAINTENANCE *OPERATING ENGINEERS LOCAL 4*	12/01/2022	$53.05	$14.25	$16.05	$0.00	$83.35
	06/01/2023	$54.29	$14.25	$16.05	$0.00	$84.59
	12/01/2023	$55.53	$14.25	$16.05	$0.00	$85.83
	06/01/2024	$56.81	$14.25	$16.05	$0.00	$87.11
	12/01/2024	$58.25	$14.25	$16.05	$0.00	$88.55
	06/01/2025	$59.53	$14.25	$16.05	$0.00	$89.83
	12/01/2025	$60.97	$14.25	$16.05	$0.00	$91.27
	06/01/2026	$62.25	$14.25	$16.05	$0.00	$92.55
	12/01/2026	$63.69	$14.25	$16.05	$0.00	$93.99
For apprentice rates see "Apprentice- OPERATING ENGINEERS"						
MILLWRIGHT (Zone 2) *MILLWRIGHTS LOCAL 1121 - Zone 2*	01/02/2023	$41.92	$8.58	$21.57	$0.00	$72.07

Classification	Effective Date	Base Wage	Health	Pension	Supplemental Unemployment	Total Rate

Apprentice - *MILLWRIGHT - Local 1121 Zone 2*

Effective Date - 01/02/2023

Step	percent	Apprentice Base Wage	Health	Pension	Supplemental Unemployment	Total Rate
1	55	$23.06	$8.58	$5.72	$0.00	$37.36
2	65	$27.25	$8.58	$17.93	$0.00	$53.76
3	75	$31.44	$8.58	$18.98	$0.00	$59.00
4	85	$35.63	$8.58	$20.01	$0.00	$64.22

Notes: Step 1&2 Appr. indentured after 1/6/2020 receive no pension, but do receive annuity. (Step 1 $5.72, Step 2 $6.66)
Steps are 2,000 hours

Apprentice to Journeyworker Ratio:1:4

MORTAR MIXER *LABORERS - ZONE 2*	12/01/2022	$37.41	$9.10	$16.64	$0.00	$63.15
	06/01/2023	$38.31	$9.10	$16.64	$0.00	$64.05
	12/01/2023	$39.21	$9.10	$16.64	$0.00	$64.95
For apprentice rates see "Apprentice- LABORER"						
OILER (OTHER THAN TRUCK CRANES,GRADALLS) *OPERATING ENGINEERS LOCAL 4*	12/01/2022	$24.37	$14.25	$16.05	$0.00	$54.67
	06/01/2023	$24.94	$14.25	$16.05	$0.00	$55.24
	12/01/2023	$25.51	$14.25	$16.05	$0.00	$55.81
	06/01/2024	$26.11	$14.25	$16.05	$0.00	$56.41
	12/01/2024	$26.77	$14.25	$16.05	$0.00	$57.07
	06/01/2025	$27.37	$14.25	$16.05	$0.00	$57.67
	12/01/2025	$28.03	$14.25	$16.05	$0.00	$58.33
	06/01/2026	$28.62	$14.25	$16.05	$0.00	$58.92
	12/01/2026	$29.29	$14.25	$16.05	$0.00	$59.59
For apprentice rates see "Apprentice- OPERATING ENGINEERS"						
OILER (TRUCK CRANES, GRADALLS) *OPERATING ENGINEERS LOCAL 4*	12/01/2022	$29.57	$14.25	$16.05	$0.00	$59.87
	06/01/2023	$30.27	$14.25	$16.05	$0.00	$60.57
	12/01/2023	$30.96	$14.25	$16.05	$0.00	$61.26
	06/01/2024	$31.68	$14.25	$16.05	$0.00	$61.98
	12/01/2024	$32.48	$14.25	$16.05	$0.00	$62.78
	06/01/2025	$33.20	$14.25	$16.05	$0.00	$63.50
	12/01/2025	$34.00	$14.25	$16.05	$0.00	$64.30
	06/01/2026	$34.72	$14.25	$16.05	$0.00	$65.02
	12/01/2026	$35.52	$14.25	$16.05	$0.00	$65.82
For apprentice rates see "Apprentice- OPERATING ENGINEERS"						
OTHER POWER DRIVEN EQUIPMENT - CLASS II *OPERATING ENGINEERS LOCAL 4*	12/01/2022	$53.05	$14.25	$16.05	$0.00	$83.35
	06/01/2023	$54.29	$14.25	$16.05	$0.00	$84.59
	12/01/2023	$55.53	$14.25	$16.05	$0.00	$85.83
	06/01/2024	$56.81	$14.25	$16.05	$0.00	$87.11
	12/01/2024	$58.25	$14.25	$16.05	$0.00	$88.55
	06/01/2025	$59.53	$14.25	$16.05	$0.00	$89.83
	12/01/2025	$60.97	$14.25	$16.05	$0.00	$91.27
	06/01/2026	$62.25	$14.25	$16.05	$0.00	$92.55
	12/01/2026	$63.69	$14.25	$16.05	$0.00	$93.99

Classification	Effective Date	Base Wage	Health	Pension	Supplemental Unemployment	Total Rate
For apprentice rates see "Apprentice- OPERATING ENGINEERS"						
PAINTER (BRIDGES/TANKS) *PAINTERS LOCAL 35 - ZONE 2*	01/01/2023	$56.06	$8.65	$23.05	$0.00	$87.76
	07/01/2023	$57.26	$8.65	$23.05	$0.00	$88.96
	01/01/2024	$58.46	$8.65	$23.05	$0.00	$90.16
	07/01/2024	$59.66	$8.65	$23.05	$0.00	$91.36
	01/01/2025	$60.86	$8.65	$23.05	$0.00	$92.56

Apprentice - *PAINTER Local 35 - BRIDGES/TANKS*

Effective Date - 01/01/2023

Step	percent	Apprentice Base Wage	Health	Pension	Supplemental Unemployment	Total Rate
1	50	$28.03	$8.65	$0.00	$0.00	$36.68
2	55	$30.83	$8.65	$6.27	$0.00	$45.75
3	60	$33.64	$8.65	$6.84	$0.00	$49.13
4	65	$36.44	$8.65	$7.41	$0.00	$52.50
5	70	$39.24	$8.65	$19.63	$0.00	$67.52
6	75	$42.05	$8.65	$20.20	$0.00	$70.90
7	80	$44.85	$8.65	$20.77	$0.00	$74.27
8	90	$50.45	$8.65	$21.91	$0.00	$81.01

Effective Date - 07/01/2023

Step	percent	Apprentice Base Wage	Health	Pension	Supplemental Unemployment	Total Rate
1	50	$28.63	$8.65	$0.00	$0.00	$37.28
2	55	$31.49	$8.65	$6.27	$0.00	$46.41
3	60	$34.36	$8.65	$6.84	$0.00	$49.85
4	65	$37.22	$8.65	$7.41	$0.00	$53.28
5	70	$40.08	$8.65	$19.63	$0.00	$68.36
6	75	$42.95	$8.65	$20.20	$0.00	$71.80
7	80	$45.81	$8.65	$20.77	$0.00	$75.23
8	90	$51.53	$8.65	$21.91	$0.00	$82.09

Notes:

Steps are 750 hrs.

Apprentice to Journeyworker Ratio:1:1

PAINTER (SPRAY OR SANDBLAST, NEW) * * If 30% or more of surfaces to be painted are new construction, NEW paint rate shall be used.*PAINTERS LOCAL 35 - ZONE 2*	01/01/2023	$46.96	$8.65	$23.05	$0.00	$78.66
	07/01/2023	$48.16	$8.65	$23.05	$0.00	$79.86
	01/01/2024	$49.36	$8.65	$23.05	$0.00	$81.06
	07/01/2024	$50.56	$8.65	$23.05	$0.00	$82.26
	01/01/2025	$51.76	$8.65	$23.05	$0.00	$83.46

Classification	Effective Date	Base Wage	Health	Pension	Supplemental Unemployment	Total Rate

Apprentice - *PAINTER Local 35 Zone 2 - Spray/Sandblast - New*

Effective Date - 01/01/2023

Step	percent	Apprentice Base Wage	Health	Pension	Supplemental Unemployment	Total Rate
1	50	$23.48	$8.65	$0.00	$0.00	$32.13
2	55	$25.83	$8.65	$6.27	$0.00	$40.75
3	60	$28.18	$8.65	$6.84	$0.00	$43.67
4	65	$30.52	$8.65	$7.41	$0.00	$46.58
5	70	$32.87	$8.65	$19.63	$0.00	$61.15
6	75	$35.22	$8.65	$20.20	$0.00	$64.07
7	80	$37.57	$8.65	$20.77	$0.00	$66.99
8	90	$42.26	$8.65	$21.91	$0.00	$72.82

Effective Date - 07/01/2023

Step	percent	Apprentice Base Wage	Health	Pension	Supplemental Unemployment	Total Rate
1	50	$24.08	$8.65	$0.00	$0.00	$32.73
2	55	$26.49	$8.65	$6.27	$0.00	$41.41
3	60	$28.90	$8.65	$6.84	$0.00	$44.39
4	65	$31.30	$8.65	$7.41	$0.00	$47.36
5	70	$33.71	$8.65	$19.63	$0.00	$61.99
6	75	$36.12	$8.65	$20.20	$0.00	$64.97
7	80	$38.53	$8.65	$20.77	$0.00	$67.95
8	90	$43.34	$8.65	$21.91	$0.00	$73.90

Notes:

Steps are 750 hrs.

Apprentice to Journeyworker Ratio:1:1

PAINTER (SPRAY OR SANDBLAST, REPAINT) *PAINTERS LOCAL 35 - ZONE 2*	01/01/2023	$45.02	$8.65	$23.05	$0.00	$76.72
	07/01/2023	$46.22	$8.65	$23.05	$0.00	$77.92
	01/01/2024	$47.42	$8.65	$23.05	$0.00	$79.12
	07/01/2024	$48.62	$8.65	$23.05	$0.00	$80.32
	01/01/2025	$49.82	$8.65	$23.05	$0.00	$81.52

Classification	Effective Date	Base Wage	Health	Pension	Supplemental Unemployment	Total Rate

Apprentice - *PAINTER Local 35 Zone 2 - Spray/Sandblast - Repaint*

Effective Date - 01/01/2023

Step	percent	Apprentice Base Wage	Health	Pension	Supplemental Unemployment	Total Rate
1	50	$22.51	$8.65	$0.00	$0.00	$31.16
2	55	$24.76	$8.65	$6.27	$0.00	$39.68
3	60	$27.01	$8.65	$6.84	$0.00	$42.50
4	65	$29.26	$8.65	$7.41	$0.00	$45.32
5	70	$31.51	$8.65	$19.63	$0.00	$59.79
6	75	$33.77	$8.65	$20.20	$0.00	$62.62
7	80	$36.02	$8.65	$20.77	$0.00	$65.44
8	90	$40.52	$8.65	$21.91	$0.00	$71.08

Effective Date - 07/01/2023

Step	percent	Apprentice Base Wage	Health	Pension	Supplemental Unemployment	Total Rate
1	50	$23.11	$8.65	$0.00	$0.00	$31.76
2	55	$25.42	$8.65	$6.27	$0.00	$40.34
3	60	$27.73	$8.65	$6.84	$0.00	$43.22
4	65	$30.04	$8.65	$19.06	$0.00	$57.75
5	70	$32.35	$8.65	$19.63	$0.00	$60.63
6	75	$34.67	$8.65	$20.20	$0.00	$63.52
7	80	$36.98	$8.65	$20.77	$0.00	$66.40
8	90	$41.60	$8.65	$21.91	$0.00	$72.16

Notes:

Steps are 750 hrs.

Apprentice to Journeyworker Ratio:1:1

PAINTER / TAPER (BRUSH, NEW) *	01/01/2023	$45.56	$8.65	$23.05	$0.00	$77.26
* If 30% or more of surfaces to be painted are new construction, NEW paint rate shall be used.*PAINTERS LOCAL 35 - ZONE 2*	07/01/2023	$46.76	$8.65	$23.05	$0.00	$78.46
	01/01/2024	$47.96	$8.65	$23.05	$0.00	$79.66
	07/01/2024	$49.16	$8.65	$23.05	$0.00	$80.86
	01/01/2025	$50.36	$8.65	$23.05	$0.00	$82.06

Classification	Effective Date	Base Wage	Health	Pension	Supplemental Unemployment	Total Rate

Apprentice - *PAINTER - Local 35 Zone 2 - BRUSH NEW*

Effective Date - 01/01/2023

Step	percent	Apprentice Base Wage	Health	Pension	Supplemental Unemployment	Total Rate
1	50	$22.78	$8.65	$0.00	$0.00	$31.43
2	55	$25.06	$8.65	$6.27	$0.00	$39.98
3	60	$27.34	$8.65	$6.84	$0.00	$42.83
4	65	$29.61	$8.65	$7.41	$0.00	$45.67
5	70	$31.89	$8.65	$19.63	$0.00	$60.17
6	75	$34.17	$8.65	$20.20	$0.00	$63.02
7	80	$36.45	$8.65	$20.77	$0.00	$65.87
8	90	$41.00	$8.65	$21.91	$0.00	$71.56

Effective Date - 07/01/2023

Step	percent	Apprentice Base Wage	Health	Pension	Supplemental Unemployment	Total Rate
1	50	$23.38	$8.65	$0.00	$0.00	$32.03
2	55	$25.72	$8.65	$6.27	$0.00	$40.64
3	60	$28.06	$8.65	$6.84	$0.00	$43.55
4	65	$30.39	$8.65	$7.41	$0.00	$46.45
5	70	$32.73	$8.65	$19.63	$0.00	$61.01
6	75	$35.07	$8.65	$20.20	$0.00	$63.92
7	80	$37.41	$8.65	$20.77	$0.00	$66.83
8	90	$42.08	$8.65	$21.91	$0.00	$72.64

Notes:

Steps are 750 hrs.

Apprentice to Journeyworker Ratio:1:1

PAINTER / TAPER (BRUSH, REPAINT) *PAINTERS LOCAL 35 - ZONE 2*	01/01/2023	$43.62	$8.65	$23.05	$0.00	$75.32
	07/01/2023	$44.82	$8.65	$23.05	$0.00	$76.52
	01/01/2024	$46.02	$8.65	$23.05	$0.00	$77.72
	07/01/2024	$47.22	$8.65	$23.05	$0.00	$78.92
	01/01/2025	$48.42	$8.65	$23.05	$0.00	$80.12

Classification	Effective Date	Base Wage	Health	Pension	Supplemental Unemployment	Total Rate

Apprentice - *PAINTER Local 35 Zone 2 - BRUSH REPAINT*

Effective Date - 01/01/2023

Step	percent	Apprentice Base Wage	Health	Pension	Supplemental Unemployment	Total Rate
1	50	$21.81	$8.65	$0.00	$0.00	$30.46
2	55	$23.99	$8.65	$6.27	$0.00	$38.91
3	60	$26.17	$8.65	$6.84	$0.00	$41.66
4	65	$28.35	$8.65	$7.41	$0.00	$44.41
5	70	$30.53	$8.65	$19.63	$0.00	$58.81
6	75	$32.72	$8.65	$20.20	$0.00	$61.57
7	80	$34.90	$8.65	$20.77	$0.00	$64.32
8	90	$39.26	$8.65	$21.91	$0.00	$69.82

Effective Date - 07/01/2023

Step	percent	Apprentice Base Wage	Health	Pension	Supplemental Unemployment	Total Rate
1	50	$22.41	$8.65	$0.00	$0.00	$31.06
2	55	$24.65	$8.65	$6.27	$0.00	$39.57
3	60	$26.89	$8.65	$6.84	$0.00	$42.38
4	65	$29.13	$8.65	$7.41	$0.00	$45.19
5	70	$31.37	$8.65	$19.63	$0.00	$59.65
6	75	$33.62	$8.65	$20.20	$0.00	$62.47
7	80	$35.86	$8.65	$20.77	$0.00	$65.28
8	90	$40.34	$8.65	$21.91	$0.00	$70.90

Notes:

Steps are 750 hrs.

Apprentice to Journeyworker Ratio:1:1

PAINTER TRAFFIC MARKINGS (HEAVY/HIGHWAY) *LABORERS - ZONE 2 (HEAVY & HIGHWAY)*	12/01/2022	$36.56	$9.35	$16.89	$0.00	$62.80
	06/01/2023	$37.46	$9.35	$16.89	$0.00	$63.70
	12/01/2023	$38.36	$9.35	$16.89	$0.00	$64.60
	06/01/2024	$39.69	$9.35	$16.89	$0.00	$65.93
	12/01/2024	$41.02	$9.35	$16.89	$0.00	$67.26
	06/01/2025	$42.41	$9.35	$16.89	$0.00	$68.65
	12/01/2025	$43.79	$9.35	$16.89	$0.00	$70.03
	06/01/2026	$45.23	$9.35	$16.89	$0.00	$71.47
	12/01/2026	$46.67	$9.35	$16.89	$0.00	$72.91
For apprentice rates see "Apprentice- LABORER (Heavy and Highway)						
PANEL & PICKUP TRUCKS DRIVER *TEAMSTERS JOINT COUNCIL NO. 10 ZONE B*	12/01/2021	$35.78	$13.41	$16.01	$0.00	$65.20
PIER AND DOCK CONSTRUCTOR (UNDERPINNING AND DECK) *PILE DRIVER LOCAL 56 (ZONE 1)* For apprentice rates see "Apprentice- PILE DRIVER"	08/01/2020	$49.07	$9.40	$23.12	$0.00	$81.59
PILE DRIVER *PILE DRIVER LOCAL 56 (ZONE 1)*	08/01/2020	$49.07	$9.40	$23.12	$0.00	$81.59

Classification	Effective Date	Base Wage	Health	Pension	Supplemental Unemployment	Total Rate

Apprentice - *PILE DRIVER - Local 56 Zone 1*

Effective Date - 08/01/2020

Step	percent	Apprentice Base Wage	Health	Pension	Supplemental Unemployment	Total Rate
1	50	$24.54	$9.40	$23.12	$0.00	$57.06
2	60	$29.44	$9.40	$23.12	$0.00	$61.96
3	70	$34.35	$9.40	$23.12	$0.00	$66.87
4	75	$36.80	$9.40	$23.12	$0.00	$69.32
5	80	$39.26	$9.40	$23.12	$0.00	$71.78
6	80	$39.26	$9.40	$23.12	$0.00	$71.78
7	90	$44.16	$9.40	$23.12	$0.00	$76.68
8	90	$44.16	$9.40	$23.12	$0.00	$76.68

Notes:

% Indentured After 10/1/17; 45/45/55/55/70/70/80/80
Step 1&2 $34.01/ 3&4 $41.46/ 5&6 $62.80/ 7&8 $69.25

Apprentice to Journeyworker Ratio:1:5

PIPELAYER *LABORERS - ZONE 2*	12/01/2022	$37.41	$9.10	$16.64	$0.00	$63.15
	06/01/2023	$38.31	$9.10	$16.64	$0.00	$64.05
	12/01/2023	$39.21	$9.10	$16.64	$0.00	$64.95
For apprentice rates see "Apprentice- LABORER"						
PIPELAYER (HEAVY & HIGHWAY) *LABORERS - ZONE 2 (HEAVY & HIGHWAY)*	12/01/2022	$36.81	$9.35	$16.89	$0.00	$63.05
	06/01/2023	$37.71	$9.35	$16.89	$0.00	$63.95
	12/01/2023	$38.61	$9.35	$16.89	$0.00	$64.85
	06/01/2024	$39.94	$9.35	$16.89	$0.00	$66.18
	12/01/2024	$41.27	$9.35	$16.89	$0.00	$67.51
	06/01/2025	$42.66	$9.35	$16.89	$0.00	$68.90
	12/01/2025	$44.04	$9.35	$16.89	$0.00	$70.28
	06/01/2026	$45.48	$9.35	$16.89	$0.00	$71.72
	12/01/2026	$46.92	$9.35	$16.89	$0.00	$73.16
For apprentice rates see "Apprentice- LABORER (Heavy and Highway)"						
PLUMBER & PIPEFITTER *PLUMBERS & PIPEFITTERS LOCAL 51*	08/30/2021	$46.49	$10.15	$19.95	$0.00	$76.59

Classification	Effective Date	Base Wage	Health	Pension	Supplemental Unemployment	Total Rate

Apprentice - *PLUMBER/PIPEFITTER - Local 51*

Effective Date - 08/30/2021

Step	percent	Apprentice Base Wage	Health	Pension	Supplemental Unemployment	Total Rate
1	40	$18.60	$10.15	$2.50	$0.00	$31.25
2	50	$23.25	$10.15	$2.50	$0.00	$35.90
3	60	$27.89	$10.15	$8.80	$0.00	$46.84
4	70	$32.54	$10.15	$14.08	$0.00	$56.77
5	80	$37.19	$10.15	$17.60	$0.00	$64.94

Notes:

Steps 2000hrs. Prior 9/1/05; 40/40/45/50/55/60/65/75/80/85

Apprentice to Journeyworker Ratio:1:3

PNEUMATIC CONTROLS (TEMP.) *PLUMBERS & PIPEFITTERS LOCAL 51*	08/30/2021	$46.49	$10.15	$19.95	$0.00	$76.59
For apprentice rates see "Apprentice- PIPEFITTER" or "PLUMBER/PIPEFITTER"						
PNEUMATIC DRILL/TOOL OPERATOR *LABORERS - ZONE 2*	12/01/2022	$37.41	$9.10	$16.64	$0.00	$63.15
	06/01/2023	$38.31	$9.10	$16.64	$0.00	$64.05
	12/01/2023	$39.21	$9.10	$16.64	$0.00	$64.95
For apprentice rates see "Apprentice- LABORER"						
PNEUMATIC DRILL/TOOL OPERATOR (HEAVY & HIGHWAY) *LABORERS - ZONE 2 (HEAVY & HIGHWAY)*	12/01/2022	$36.81	$9.35	$16.89	$0.00	$63.05
	06/01/2023	$37.71	$9.35	$16.89	$0.00	$63.95
	12/01/2023	$38.61	$9.35	$16.89	$0.00	$64.85
	06/01/2024	$39.94	$9.35	$16.89	$0.00	$66.18
	12/01/2024	$41.27	$9.35	$16.89	$0.00	$67.51
	06/01/2025	$42.66	$9.35	$16.89	$0.00	$68.90
	12/01/2025	$44.04	$9.35	$16.89	$0.00	$70.28
	06/01/2026	$45.48	$9.35	$16.89	$0.00	$71.72
	12/01/2026	$46.92	$9.35	$16.89	$0.00	$73.16
For apprentice rates see "Apprentice- LABORER (Heavy and Highway)						
POWDERMAN & BLASTER *LABORERS - ZONE 2*	12/01/2022	$38.16	$9.10	$16.64	$0.00	$63.90
	06/01/2023	$39.06	$9.10	$16.64	$0.00	$64.80
	12/01/2023	$39.96	$9.10	$16.64	$0.00	$65.70
For apprentice rates see "Apprentice- LABORER"						
POWDERMAN & BLASTER (HEAVY & HIGHWAY) *LABORERS - ZONE 2 (HEAVY & HIGHWAY)*	12/01/2022	$37.56	$9.35	$16.89	$0.00	$63.80
	06/01/2023	$38.46	$9.35	$16.89	$0.00	$64.70
	12/01/2023	$39.36	$9.35	$16.89	$0.00	$65.60
	06/01/2024	$40.69	$9.35	$16.89	$0.00	$66.93
	12/01/2024	$42.02	$9.35	$16.89	$0.00	$68.26
	06/01/2025	$43.41	$9.35	$16.89	$0.00	$69.65
	12/01/2025	$44.79	$9.35	$16.89	$0.00	$71.03
	06/01/2026	$46.23	$9.35	$16.89	$0.00	$72.47
	12/01/2026	$47.67	$9.35	$16.89	$0.00	$73.91
For apprentice rates see "Apprentice- LABORER (Heavy and Highway)						

Classification	Effective Date	Base Wage	Health	Pension	Supplemental Unemployment	Total Rate
POWER SHOVEL/DERRICK/TRENCHING MACHINE *OPERATING ENGINEERS LOCAL 4*	12/01/2022	$53.63	$14.25	$16.05	$0.00	$83.93
	06/01/2023	$54.88	$14.25	$16.05	$0.00	$85.18
	12/01/2023	$56.13	$14.25	$16.05	$0.00	$86.43
	06/01/2024	$57.43	$14.25	$16.05	$0.00	$87.73
	12/01/2024	$58.88	$14.25	$16.05	$0.00	$89.18
	06/01/2025	$60.18	$14.25	$16.05	$0.00	$90.48
	12/01/2025	$61.63	$14.25	$16.05	$0.00	$91.93
	06/01/2026	$62.93	$14.25	$16.05	$0.00	$93.23
	12/01/2026	$64.38	$14.25	$16.05	$0.00	$94.68
For apprentice rates see "Apprentice- OPERATING ENGINEERS"						
PUMP OPERATOR (CONCRETE) *OPERATING ENGINEERS LOCAL 4*	12/01/2022	$53.63	$14.25	$16.05	$0.00	$83.93
	06/01/2023	$54.88	$14.25	$16.05	$0.00	$85.18
	12/01/2023	$56.13	$14.25	$16.05	$0.00	$86.43
	06/01/2024	$57.43	$14.25	$16.05	$0.00	$87.73
	12/01/2024	$58.88	$14.25	$16.05	$0.00	$89.18
	06/01/2025	$60.18	$14.25	$16.05	$0.00	$90.48
	12/01/2025	$61.63	$14.25	$16.05	$0.00	$91.93
	06/01/2026	$62.93	$14.25	$16.05	$0.00	$93.23
	12/01/2026	$64.38	$14.25	$16.05	$0.00	$94.68
For apprentice rates see "Apprentice- OPERATING ENGINEERS"						
PUMP OPERATOR (DEWATERING, OTHER) *OPERATING ENGINEERS LOCAL 4*	12/01/2022	$35.08	$14.25	$16.05	$0.00	$65.38
	06/01/2023	$35.90	$14.25	$16.05	$0.00	$66.20
	12/01/2023	$36.72	$14.25	$16.05	$0.00	$67.02
	06/01/2024	$37.57	$14.25	$16.05	$0.00	$67.87
	12/01/2024	$38.52	$14.25	$16.05	$0.00	$68.82
	06/01/2025	$39.37	$14.25	$16.05	$0.00	$69.67
	12/01/2025	$40.32	$14.25	$16.05	$0.00	$70.62
	06/01/2026	$41.18	$14.25	$16.05	$0.00	$71.48
	12/01/2026	$42.13	$14.25	$16.05	$0.00	$72.43
For apprentice rates see "Apprentice- OPERATING ENGINEERS"						
READY-MIX CONCRETE DRIVER *TEAMSTERS 653 - Southeastern Concrete (Weymouth)*	08/01/2022	$24.50	$13.41	$6.90	$0.00	$44.81
	05/01/2023	$25.00	$13.41	$6.90	$0.00	$45.31
	08/01/2023	$25.00	$13.91	$6.90	$0.00	$45.81
RECLAIMERS *OPERATING ENGINEERS LOCAL 4*	12/01/2022	$53.05	$14.25	$16.05	$0.00	$83.35
	06/01/2023	$54.29	$14.25	$16.05	$0.00	$84.59
	12/01/2023	$55.53	$14.25	$16.05	$0.00	$85.83
	06/01/2024	$56.81	$14.25	$16.05	$0.00	$87.11
	12/01/2024	$58.25	$14.25	$16.05	$0.00	$88.55
	06/01/2025	$59.53	$14.25	$16.05	$0.00	$89.83
	12/01/2025	$60.97	$14.25	$16.05	$0.00	$91.27
	06/01/2026	$62.25	$14.25	$16.05	$0.00	$92.55
	12/01/2026	$63.69	$14.25	$16.05	$0.00	$93.99
For apprentice rates see "Apprentice- OPERATING ENGINEERS"						
RIDE-ON MOTORIZED BUGGY OPERATOR *LABORERS - ZONE 2*	12/01/2022	$37.41	$9.10	$16.64	$0.00	$63.15
	06/01/2023	$38.31	$9.10	$16.64	$0.00	$64.05
	12/01/2023	$39.21	$9.10	$16.64	$0.00	$64.95

Classification	Effective Date	Base Wage	Health	Pension	Supplemental Unemployment	Total Rate
For apprentice rates see "Apprentice- LABORER"						
ROLLER/SPREADER/MULCHING MACHINE *OPERATING ENGINEERS LOCAL 4*	12/01/2022	$53.05	$14.25	$16.05	$0.00	$83.35
	06/01/2023	$54.29	$14.25	$16.05	$0.00	$84.59
	12/01/2023	$55.53	$14.25	$16.05	$0.00	$85.83
	06/01/2024	$56.81	$14.25	$16.05	$0.00	$87.11
	12/01/2024	$58.25	$14.25	$16.05	$0.00	$88.55
	06/01/2025	$59.53	$14.25	$16.05	$0.00	$89.83
	12/01/2025	$60.97	$14.25	$16.05	$0.00	$91.27
	06/01/2026	$62.25	$14.25	$16.05	$0.00	$92.55
	12/01/2026	$63.69	$14.25	$16.05	$0.00	$93.99
For apprentice rates see "Apprentice- OPERATING ENGINEERS"						
ROOFER (Inc.Roofer Waterproofng &Roofer Damproofg) *ROOFERS LOCAL 33*	02/01/2023	$48.53	$12.78	$20.20	$0.00	$81.51
	08/01/2023	$50.03	$12.78	$20.20	$0.00	$83.01
	02/01/2024	$51.28	$12.78	$20.20	$0.00	$84.26
	08/01/2024	$52.78	$12.78	$20.20	$0.00	$85.76
	02/01/2025	$54.03	$12.78	$20.20	$0.00	$87.01
	08/01/2025	$55.53	$12.78	$20.20	$0.00	$88.51
	02/01/2026	$56.78	$12.78	$20.20	$0.00	$89.76

Apprentice - *ROOFER - Local 33*

Effective Date - 02/01/2023

Step	percent	Apprentice Base Wage	Health	Pension	Supplemental Unemployment	Total Rate
1	50	$24.27	$12.78	$5.59	$0.00	$42.64
2	60	$29.12	$12.78	$20.20	$0.00	$62.10
3	65	$31.54	$12.78	$20.20	$0.00	$64.52
4	75	$36.40	$12.78	$20.20	$0.00	$69.38
5	85	$41.25	$12.78	$20.20	$0.00	$74.23

Effective Date - 08/01/2023

Step	percent	Apprentice Base Wage	Health	Pension	Supplemental Unemployment	Total Rate
1	50	$25.02	$12.78	$5.59	$0.00	$43.39
2	60	$30.02	$12.78	$20.20	$0.00	$63.00
3	65	$32.52	$12.78	$20.20	$0.00	$65.50
4	75	$37.52	$12.78	$20.20	$0.00	$70.50
5	85	$42.53	$12.78	$20.20	$0.00	$75.51

Notes: ** 1:5, 2:6-10, the 1:10; Reroofing: 1:4, then 1:1
Step 1 is 2000 hrs.; Steps 2-5 are 1000 hrs.
(Hot Pitch Mechanics' receive $1.00 hr. above ROOFER)

Apprentice to Journeyworker Ratio:**

Classification	Effective Date	Base Wage	Health	Pension	Supplemental Unemployment	Total Rate
ROOFER SLATE / TILE / PRECAST CONCRETE *ROOFERS LOCAL 33*	02/01/2023	$48.78	$12.78	$20.20	$0.00	$81.76
	08/01/2023	$50.28	$12.78	$20.20	$0.00	$83.26
	02/01/2024	$51.53	$12.78	$20.20	$0.00	$84.51
	08/01/2024	$53.03	$12.78	$20.20	$0.00	$86.01
	02/01/2025	$54.28	$12.78	$20.20	$0.00	$87.26
	08/01/2025	$55.78	$12.78	$20.20	$0.00	$88.76
	02/01/2026	$57.03	$12.78	$20.20	$0.00	$90.01
For apprentice rates see "Apprentice- ROOFER"						
SHEETMETAL WORKER *SHEETMETAL WORKERS LOCAL 17 - B*	04/01/2022	$37.41	$13.95	$17.85	$2.08	$71.29

Apprentice - *SHEET METAL WORKER - Local 17-B*

Effective Date - 04/01/2022

Step	percent	Apprentice Base Wage	Health	Pension	Supplemental Unemployment	Total Rate
1	40	$14.96	$13.95	$4.10	$1.02	$34.03
2	45	$16.83	$13.95	$4.61	$1.09	$36.48
3	50	$18.71	$13.95	$11.26	$1.35	$45.27
4	55	$20.58	$13.95	$11.26	$1.41	$47.20
5	60	$22.45	$13.95	$14.60	$1.53	$52.53
6	65	$24.32	$13.95	$14.88	$1.59	$54.74
7	70	$26.19	$13.95	$15.16	$1.66	$56.96
8	75	$28.06	$13.95	$15.44	$1.72	$59.17
9	80	$29.93	$13.95	$15.72	$1.79	$61.39
10	85	$31.80	$13.95	$15.57	$1.85	$63.17

Notes:

Apprentice to Journeyworker Ratio:1:3

SPECIALIZED EARTH MOVING EQUIP < 35 TONS *TEAMSTERS JOINT COUNCIL NO. 10 ZONE B*	12/01/2021	$36.24	$13.41	$16.01	$0.00	$65.66
SPECIALIZED EARTH MOVING EQUIP > 35 TONS *TEAMSTERS JOINT COUNCIL NO. 10 ZONE B*	12/01/2021	$36.53	$13.41	$16.01	$0.00	$65.95
SPRINKLER FITTER *SPRINKLER FITTERS LOCAL 550 - (Section B) Zone 2*	10/01/2022	$59.00	$10.44	$22.60	$0.00	$92.04
	03/01/2023	$60.53	$10.44	$22.60	$0.00	$93.57
	10/01/2023	$62.11	$10.44	$22.60	$0.00	$95.15
	03/01/2024	$63.73	$10.44	$22.60	$0.00	$96.77
	10/01/2024	$65.35	$10.44	$22.60	$0.00	$98.39
	03/01/2025	$66.97	$10.44	$22.60	$0.00	$100.01

Classification	Effective Date	Base Wage	Health	Pension	Supplemental Unemployment	Total Rate

Apprentice - *SPRINKLER FITTER - Local 550 (Section B) Zone 2*

Effective Date - 10/01/2022

Step	percent	Apprentice Base Wage	Health	Pension	Supplemental Unemployment	Total Rate
1	35	$20.65	$10.44	$9.10	$0.00	$40.19
2	40	$23.60	$10.44	$9.10	$0.00	$43.14
3	45	$26.55	$10.44	$9.10	$0.00	$46.09
4	50	$29.50	$10.44	$9.10	$0.00	$49.04
5	55	$32.45	$10.44	$9.10	$0.00	$51.99
6	60	$35.40	$10.44	$11.10	$0.00	$56.94
7	65	$38.35	$10.44	$11.10	$0.00	$59.89
8	70	$41.30	$10.44	$11.10	$0.00	$62.84
9	75	$44.25	$10.44	$11.10	$0.00	$65.79
10	80	$47.20	$10.44	$11.10	$0.00	$68.74

Effective Date - 03/01/2023

Step	percent	Apprentice Base Wage	Health	Pension	Supplemental Unemployment	Total Rate
1	35	$21.19	$10.44	$9.10	$0.00	$40.73
2	40	$24.21	$10.44	$9.10	$0.00	$43.75
3	45	$27.24	$10.44	$9.10	$0.00	$46.78
4	50	$30.27	$10.44	$9.10	$0.00	$49.81
5	55	$33.29	$10.44	$9.10	$0.00	$52.83
6	60	$36.32	$10.44	$11.10	$0.00	$57.86
7	65	$39.34	$10.44	$11.10	$0.00	$60.88
8	70	$42.37	$10.44	$11.10	$0.00	$63.91
9	75	$45.40	$10.44	$11.10	$0.00	$66.94
10	80	$48.42	$10.44	$11.10	$0.00	$69.96

Notes: Apprentice entered prior 9/30/10:
40/45/50/55/60/65/70/75/80/85
Steps are 850 hours

Apprentice to Journeyworker Ratio:1:3

STEAM BOILER OPERATOR *OPERATING ENGINEERS LOCAL 4*	12/01/2022	$53.05	$14.25	$16.05	$0.00	$83.35
	06/01/2023	$54.29	$14.25	$16.05	$0.00	$84.59
	12/01/2023	$55.53	$14.25	$16.05	$0.00	$85.83
	06/01/2024	$56.81	$14.25	$16.05	$0.00	$87.11
	12/01/2024	$58.25	$14.25	$16.05	$0.00	$88.55
	06/01/2025	$59.53	$14.25	$16.05	$0.00	$89.83
	12/01/2025	$60.97	$14.25	$16.05	$0.00	$91.27
	06/01/2026	$62.25	$14.25	$16.05	$0.00	$92.55
	12/01/2026	$63.69	$14.25	$16.05	$0.00	$93.99

For apprentice rates see "Apprentice- OPERATING ENGINEERS"

Classification	Effective Date	Base Wage	Health	Pension	Supplemental Unemployment	Total Rate
TAMPERS, SELF-PROPELLED OR TRACTOR DRAWN *OPERATING ENGINEERS LOCAL 4*	12/01/2022	$53.05	$14.25	$16.05	$0.00	$83.35
	06/01/2023	$54.29	$14.25	$16.05	$0.00	$84.59
	12/01/2023	$55.53	$14.25	$16.05	$0.00	$85.83
	06/01/2024	$56.81	$14.25	$16.05	$0.00	$87.11
	12/01/2024	$58.25	$14.25	$16.05	$0.00	$88.55
	06/01/2025	$59.53	$14.25	$16.05	$0.00	$89.83
	12/01/2025	$60.97	$14.25	$16.05	$0.00	$91.27
	06/01/2026	$62.25	$14.25	$16.05	$0.00	$92.55
	12/01/2026	$63.69	$14.25	$16.05	$0.00	$93.99
For apprentice rates see "Apprentice- OPERATING ENGINEERS"						
TELECOMMUNICATION TECHNICIAN *ELECTRICIANS LOCAL 223*	09/01/2022	$38.16	$11.25	$13.31	$0.00	$62.72
	09/01/2023	$39.40	$11.50	$13.91	$0.00	$64.81
	09/01/2024	$40.69	$11.75	$14.53	$0.00	$66.97

Apprentice - *TELECOMMUNICATION TECHNICIAN - Local 223*

Effective Date - 09/01/2022

Step	percent	Apprentice Base Wage	Health	Pension	Supplemental Unemployment	Total Rate
1	0	$0.00	$0.00	$0.00	$0.00	$0.00

Notes: See Electrician Apprentice Wages

Telecom Apprentice Wages shall be the same as the Electrician Apprentice Wages

Apprentice to Journeyworker Ratio:2:3***

TERRAZZO FINISHERS *BRICKLAYERS LOCAL 3 - MARBLE & TILE*	02/01/2023	$59.29	$11.49	$22.34	$0.00	$93.12
	08/01/2023	$61.34	$11.49	$22.34	$0.00	$95.17
	02/01/2024	$62.59	$11.49	$22.34	$0.00	$96.42
	08/01/2024	$64.69	$11.49	$22.34	$0.00	$98.52
	02/01/2025	$65.99	$11.49	$22.34	$0.00	$99.82
	08/01/2025	$68.14	$11.49	$22.34	$0.00	$101.97
	02/01/2026	$69.49	$11.49	$22.34	$0.00	$103.32
	08/01/2026	$71.69	$11.49	$22.34	$0.00	$105.52
	02/01/2027	$73.09	$11.49	$22.34	$0.00	$106.92

Classification	Effective Date	Base Wage	Health	Pension	Supplemental Unemployment	Total Rate

Apprentice - *TERRAZZO FINISHER - Local 3 Marble & Tile*

Effective Date - 02/01/2023

Step	percent	Apprentice Base Wage	Health	Pension	Supplemental Unemployment	Total Rate
1	50	$29.65	$11.49	$22.34	$0.00	$63.48
2	60	$35.57	$11.49	$22.34	$0.00	$69.40
3	70	$41.50	$11.49	$22.34	$0.00	$75.33
4	80	$47.43	$11.49	$22.34	$0.00	$81.26
5	90	$53.36	$11.49	$22.34	$0.00	$87.19

Effective Date - 08/01/2023

Step	percent	Apprentice Base Wage	Health	Pension	Supplemental Unemployment	Total Rate
1	50	$30.67	$11.49	$22.34	$0.00	$64.50
2	60	$36.80	$11.49	$22.34	$0.00	$70.63
3	70	$42.94	$11.49	$22.34	$0.00	$76.77
4	80	$49.07	$11.49	$22.34	$0.00	$82.90
5	90	$55.21	$11.49	$22.34	$0.00	$89.04

Notes:

Apprentice to Journeyworker Ratio:1:3

TEST BORING DRILLER *LABORERS - FOUNDATION AND MARINE*	12/01/2022	$46.58	$9.35	$17.97	$0.00	$73.90
	06/01/2023	$47.58	$9.35	$17.97	$0.00	$74.90
	12/01/2023	$48.83	$9.35	$17.97	$0.00	$76.15
	06/01/2024	$50.31	$9.35	$17.97	$0.00	$77.63
	12/01/2024	$51.78	$9.35	$17.97	$0.00	$79.10
	06/01/2025	$53.28	$9.35	$17.97	$0.00	$80.60
	12/01/2025	$54.78	$9.35	$17.97	$0.00	$82.10
	06/01/2026	$56.33	$9.35	$17.97	$0.00	$83.65
	12/01/2026	$57.83	$9.35	$17.97	$0.00	$85.15
For apprentice rates see "Apprentice- LABORER"						
TEST BORING DRILLER HELPER *LABORERS - FOUNDATION AND MARINE*	12/01/2022	$42.70	$9.35	$17.97	$0.00	$70.02
	06/01/2023	$43.70	$9.35	$17.97	$0.00	$71.02
	12/01/2023	$44.95	$9.35	$17.97	$0.00	$72.27
	06/01/2024	$46.43	$9.35	$17.97	$0.00	$73.75
	12/01/2024	$47.90	$9.35	$17.97	$0.00	$75.22
	06/01/2025	$49.40	$9.35	$17.97	$0.00	$76.72
	12/01/2025	$50.90	$9.35	$17.97	$0.00	$78.22
	06/01/2026	$52.45	$9.35	$17.97	$0.00	$79.77
	12/01/2026	$53.95	$9.35	$17.97	$0.00	$81.27
For apprentice rates see "Apprentice- LABORER"						

Classification	Effective Date	Base Wage	Health	Pension	Supplemental Unemployment	Total Rate
TEST BORING LABORER *LABORERS - FOUNDATION AND MARINE*	12/01/2022	$42.58	$9.35	$17.97	$0.00	$69.90
	06/01/2023	$43.58	$9.35	$17.97	$0.00	$70.90
	12/01/2023	$44.83	$9.35	$17.97	$0.00	$72.15
	06/01/2024	$46.31	$9.35	$17.97	$0.00	$73.63
	12/01/2024	$47.78	$9.35	$17.97	$0.00	$75.10
	06/01/2025	$49.28	$9.35	$17.97	$0.00	$76.60
	12/01/2025	$50.78	$9.35	$17.97	$0.00	$78.10
	06/01/2026	$52.33	$9.35	$17.97	$0.00	$79.65
	12/01/2026	$53.83	$9.35	$17.97	$0.00	$81.15
For apprentice rates see "Apprentice- LABORER"						
TRACTORS/PORTABLE STEAM GENERATORS *OPERATING ENGINEERS LOCAL 4*	12/01/2022	$53.05	$14.25	$16.05	$0.00	$83.35
	06/01/2023	$54.29	$14.25	$16.05	$0.00	$84.59
	12/01/2023	$55.53	$14.25	$16.05	$0.00	$85.83
	06/01/2024	$56.81	$14.25	$16.05	$0.00	$87.11
	12/01/2024	$58.25	$14.25	$16.05	$0.00	$88.55
	06/01/2025	$59.53	$14.25	$16.05	$0.00	$89.83
	12/01/2025	$60.97	$14.25	$16.05	$0.00	$91.27
	06/01/2026	$62.25	$14.25	$16.05	$0.00	$92.55
	12/01/2026	$63.69	$14.25	$16.05	$0.00	$93.99
For apprentice rates see "Apprentice- OPERATING ENGINEERS"						
TRAILERS FOR EARTH MOVING EQUIPMENT *TEAMSTERS JOINT COUNCIL NO. 10 ZONE B*	12/01/2021	$36.82	$13.41	$16.01	$0.00	$66.24
TUNNEL WORK - COMPRESSED AIR *LABORERS (COMPRESSED AIR)*	12/01/2022	$54.81	$9.35	$18.42	$0.00	$82.58
	06/01/2023	$55.81	$9.35	$18.42	$0.00	$83.58
	12/01/2023	$57.06	$9.35	$18.42	$0.00	$84.83
	06/01/2024	$58.54	$9.35	$18.42	$0.00	$86.31
	12/01/2024	$60.01	$9.35	$18.42	$0.00	$87.78
	06/01/2025	$61.51	$9.35	$18.42	$0.00	$89.28
	12/01/2025	$63.01	$9.35	$18.42	$0.00	$90.78
	06/01/2026	$64.56	$9.35	$18.42	$0.00	$92.33
	12/01/2026	$66.06	$9.35	$18.42	$0.00	$93.83
For apprentice rates see "Apprentice- LABORER"						
TUNNEL WORK - COMPRESSED AIR (HAZ. WASTE) *LABORERS (COMPRESSED AIR)*	12/01/2022	$56.81	$9.35	$18.42	$0.00	$84.58
	06/01/2023	$57.81	$9.35	$18.42	$0.00	$85.58
	12/01/2023	$59.06	$9.35	$18.42	$0.00	$86.83
	06/01/2024	$60.54	$9.35	$18.42	$0.00	$88.31
	12/01/2024	$62.01	$9.35	$18.42	$0.00	$89.78
	06/01/2025	$63.51	$9.35	$18.42	$0.00	$91.28
	12/01/2025	$65.01	$9.35	$18.42	$0.00	$92.78
	06/01/2026	$66.56	$9.35	$18.42	$0.00	$94.33
	12/01/2026	$68.06	$9.35	$18.42	$0.00	$95.83
For apprentice rates see "Apprentice- LABORER"						

Classification	Effective Date	Base Wage	Health	Pension	Supplemental Unemployment	Total Rate
TUNNEL WORK - FREE AIR *LABORERS (FREE AIR TUNNEL)*	12/01/2022	$46.88	$9.35	$18.42	$0.00	$74.65
	06/01/2023	$47.88	$9.35	$18.42	$0.00	$75.65
	12/01/2023	$49.13	$9.35	$18.42	$0.00	$76.90
	06/01/2024	$50.61	$9.35	$18.42	$0.00	$78.38
	12/01/2024	$52.08	$9.35	$18.42	$0.00	$79.85
	06/01/2025	$53.58	$9.35	$18.42	$0.00	$81.35
	12/01/2025	$55.08	$9.35	$18.42	$0.00	$82.85
	06/01/2026	$56.63	$9.35	$18.42	$0.00	$84.40
	12/01/2026	$58.13	$9.35	$18.42	$0.00	$85.90
For apprentice rates see "Apprentice- LABORER"						
TUNNEL WORK - FREE AIR (HAZ. WASTE) *LABORERS (FREE AIR TUNNEL)*	12/01/2022	$48.88	$9.35	$18.42	$0.00	$76.65
	06/01/2023	$49.88	$9.35	$18.42	$0.00	$77.65
	12/01/2023	$51.13	$9.35	$18.42	$0.00	$78.90
	06/01/2024	$52.61	$9.35	$18.42	$0.00	$80.38
	12/01/2024	$54.08	$9.35	$18.42	$0.00	$81.85
	06/01/2025	$55.58	$9.35	$18.42	$0.00	$83.35
	12/01/2025	$57.08	$9.35	$18.42	$0.00	$84.85
	06/01/2026	$58.63	$9.35	$18.42	$0.00	$86.40
	12/01/2026	$60.13	$9.35	$18.42	$0.00	$87.90
For apprentice rates see "Apprentice- LABORER"						
VAC-HAUL *TEAMSTERS JOINT COUNCIL NO. 10 ZONE B*	12/01/2021	$36.24	$13.41	$16.01	$0.00	$65.66
WAGON DRILL OPERATOR *LABORERS - ZONE 2*	12/01/2022	$37.41	$9.10	$16.64	$0.00	$63.15
	06/01/2023	$38.31	$9.10	$16.64	$0.00	$64.05
	12/01/2023	$39.21	$9.10	$16.64	$0.00	$64.95
For apprentice rates see "Apprentice- LABORER"						
WAGON DRILL OPERATOR (HEAVY & HIGHWAY) *LABORERS - ZONE 2 (HEAVY & HIGHWAY)*	12/01/2022	$36.81	$9.35	$16.89	$0.00	$63.05
	06/01/2023	$37.71	$9.35	$16.89	$0.00	$63.95
	12/01/2023	$38.61	$9.35	$16.89	$0.00	$64.85
	06/01/2024	$39.94	$9.35	$16.89	$0.00	$66.18
	12/01/2024	$41.27	$9.35	$16.89	$0.00	$67.51
	06/01/2025	$42.66	$9.35	$16.89	$0.00	$68.90
	12/01/2025	$44.04	$9.35	$16.89	$0.00	$70.28
	06/01/2026	$45.48	$9.35	$16.89	$0.00	$71.72
	12/01/2026	$46.92	$9.35	$16.89	$0.00	$73.16
For apprentice rates see "Apprentice- LABORER (Heavy and Highway)"						
WASTE WATER PUMP OPERATOR *OPERATING ENGINEERS LOCAL 4*	12/01/2022	$53.63	$14.25	$16.05	$0.00	$83.93
	06/01/2023	$54.88	$14.25	$16.05	$0.00	$85.18
	12/01/2023	$56.13	$14.25	$16.05	$0.00	$86.43
	06/01/2024	$57.43	$14.25	$16.05	$0.00	$87.73
	12/01/2024	$58.88	$14.25	$16.05	$0.00	$89.18
	06/01/2025	$60.18	$14.25	$16.05	$0.00	$90.48
	12/01/2025	$61.63	$14.25	$16.05	$0.00	$91.93
	06/01/2026	$62.93	$14.25	$16.05	$0.00	$93.23
	12/01/2026	$64.38	$14.25	$16.05	$0.00	$94.68
For apprentice rates see "Apprentice- OPERATING ENGINEERS"						

Classification	Effective Date	Base Wage	Health	Pension	Supplemental Unemployment	Total Rate
WATER METER INSTALLER *PLUMBERS & PIPEFITTERS LOCAL 51*	08/30/2021	$46.49	$10.15	$19.95	$0.00	$76.59

For apprentice rates see "Apprentice- PLUMBER/PIPEFITTER" or "PLUMBER/GASFITTER"

Additional Apprentice Information:

Minimum wage rates for apprentices employed on public works projects are listed above as a percentage of the pre-determined hourly wage rate established by the Commissioner under the provisions of the M.G.L. c. 149, ss. 26-27D. Apprentice ratios are established by the Division of Apprenticeship Training pursuant to M.G.L. c. 23, ss. 11E-11L.

All apprentices must be registered with the Division of Apprenticeship Training in accordance with M.G.L. c. 23, ss. 11E-11L.

All steps are six months (1000 hours.)
Ratios are expressed in allowable number of apprentices to journeymen or fraction thereof, unless otherwise specified.

** Multiple ratios are listed in the comment field.
*** APP to JM; 1:1, 2:2, 2:3, 3:4, 4:4, 4:5, 4:6, 5:7, 6:7, 6:8, 6:9, 7:10, 8:10, 8:11, 8:12, 9:13, 10:13, 10:14, etc.
**** APP to JM; 1:1, 1:2, 2:3, 2:4, 3:5, 4:6, 4:7, 5:8, 6:9, 6:10, 7:11, 8:12, 8:13, 9:14, 10:15, 10:16, etc.

Appendix B – MassDOT Access Permit

Charles D. Baker. Governor
Karyn E. Polito, Lieutenant Governor
Jamey Tesler, Secretary & CEO
Jonathan L. Gulliver, Highway Administrator

massDOT
Massachusetts Department of Transportation
Highway Division

5-2020-0529

PERMIT – ROCHESTER

Subject to all terms, conditions, and restrictions printed or written below, permission is hereby granted to **AD MAKEPEACE,** LLC, James Kane, 158 Tihonet Road, Wareham, MA 02571, to enter upon the State Highway in the Town of **ROCHESTER** on Auto Routes 28 and 58, locally known as Cranberry Highway and County Road respectively, for the purpose of closing four (4) existing driveways, modifying/reconstructing two (2) existing driveways, and relocating an existing driveway to provide access to a mixed-use development located at #22 Cranberry Highway. The work will also involve the installation of granite curbing/transition curbing, sidewalk, wheelchair ramps, and landscaping.

The work is for access to a new residential development which will contain 208 rental units to be constructed in four (4) 4-story apartment buildings, Building A-D. Other on-site amenities and common areas will include a 3,123 square foot clubhouse building and community garden, as well as a central courtyard consisting of an outdoor pool patio area, playground, and grilling area.

Access to the Mixed-Use Development will be provided by two (2) reconstructed "Full-Access" driveways on Cranberry Highway (Route 28) at the northerly line of the State Highway Layout (SHLO), and one (1) relocated "Full-Access" driveway on County Road (Route 58) at the westerly line of the (SHLO), as shown on the approved sketch and as follows:

- Cranberry Highway (Route 28):

1) Curb Cut A - Reconstructed "Full-Access" driveway between approximate Stations 3+80 and 4+17, flaring to Stations 3+40 and 4+57 at the edge of the hardened surface, with light grading within the project limits.
2) Curb Cut B - Reconstructed "Full-Access" driveway between approximate Stations 10+34 and 10+88, flaring to Stations 10+04 and 11+18 at the edge of the hardened surface, with light grading within the project limits.

- County Road (Route 58):

3) Relocated "Full-Access" driveway between approximate Stations 3+32 and 3+56, flaring to Stations 3+03 and 3+88 at the edge of the hardened surface, with light grading within the project limits.

The Grantee(s) will close four (4) existing driveways, three (3) which currently accesses the property on Cranberry Highway (Route 28) and one (1) on County Road (Route 58), that are located between the following Stations:

- Cranberry Highway (Route 28):
  - Station 5+28 and Station 5+69
  - Station 6+51 and Station 6+99
  - Station 8+83 and Station 9+41

- County Road (Route 58):
  - Station 1+93 and Station 2+62

District 5, 1000 County Street Taunton, MA 02780
Tel: (857) 368-5000, Fax: (508) 880-6102
www.mass.gov/orgs/highway-division

All hot mix asphalt pavement must be removed between the existing edge of road and the State Highway Layout (SHLO). The Grantee(s) is responsible for the proper disposal of all removed material. Granite curb, edging, or berm (if applicable) will then be installed to match the existing edge of road and the area brought up to grade and loamed and seeded. No plantings, mulch, or gravel will be allowed within the State Highway Layout.

THIS PERMIT IS BEING ISSUED FOR WORK WITHIN THE STATE HIGHWAY LAYOUT (SHLO) ONLY. AUTHORIZATION TO PERFORM ASSOCIATED WORK OUTSIDE OF SHLO MUST BE GRANTED BY IMPACTED PROPERTY OWNERS.

All openings in the paved surface must be backfilled and paved with a temporary patch consisting of 3" (inches) hot mix asphalt at the end of every workday. Exposed gravel will not be permitted to remain in the roadway overnight.

Upon completion of the work, the Grantee or Agent must upload into SHAPS a letter from the local building inspector or governing authority indicating that the installed ramps and sidewalks are in conformance with AAB and ADA regulations.

THE PROPOSED WORK FALLS WITHIN THE AREA OF A SIGNALIZED INTERSECTION, the Grantee(s) must contact the District Traffic Maintenance Engineer at (857) 368-5260 at least two (2) weeks prior to the commencement of said work to locate the existing traffic signal conduit/detectors and to coordinate this work so as not to disturb the traffic signals. The Grantee(s) shall provide the District Traffic Maintenance Engineer with the Permit number, the approximate Stations where the work will take place, and the limits of the work. The Grantee(s) will be responsible for marking the limits of the work in the field so that MassDOT, Highway Division, can mark the locations of all existing traffic signal conduit/detectors within those limits. The Grantee(s) will be responsible to repair/replace all damaged items and will be billed for any cost incurred to restore normal operation to MassDOT, Highway Division, signal equipment to the satisfaction of the Engineer.

All stormwater must be kept within the site. Any impacts to the State Highway Layout will require additional drainage mitigation by the Grantee(s).

Any change in design, or use of property, additional building or lot development will require the Grantee(s) to reapply online (https://shaps.massdot.state.ma.us/) for a new or amended Driveway Permit.

Please note that any utility work within the State Highway Layout requires a separate Permit. In the case of telephone/water/sewer/gas/electric/cable, the respective utility needs to apply online (https://shaps.massdot.state.ma.us/) under a separate Permit Application(s) and they must be listed as owner and applicant.

All work, including the Traffic Management Plan, is to be done as described herein and as shown on the approved sketch and plan(s)/documentation as follows:

- "Rochester Crossroads Smart Growth Development, Cranberry Highway, Rochester, MA, Project Narrative & Stormwater Report", as prepared by Allen & Major Associates, Inc., Civil Engineering - Land Surveying - Environmental Consulting - Landscape Architecture, 10 Main Street, Lakeville, MA 02347, tel: (508) 923-1010, dated September 14, 2020, and last revised July 29, 2021.
- "Rochester Crossroads Smart Growth Development, 22 Cranberry Highway, Rochester, MA", as drafted by Allen & Major Associates, Inc., Civil Engineering - Land Surveying - Environmental Consulting - Landscape Architecture, 10 Main Street, Lakeville, MA 02347, tel: (508) 923-1010, and dated October 25, 2019.

- "Traffic Impact Study, Rochester Crossroads Mixed-Use Development, County Road (Route 58) and Cranberry Highway (Route 28), Rochester, MA", as prepared by McMahon Associates, Inc., 14 Breakneck Hill Road, Lincoln, RI 02865, TEL: (401) 648-7200, and dated December 2019.

The Grantee(s) are hereby informed that if the proposed change in use generates unanticipated additional traffic volumes, the Grantee(s) shall be required to forward a current traffic study to MassDOT, Highway Division for review. Once reviewed, MassDOT, Highway Division will determine whether the existing driveway/roadway geometry is sufficient for safe access to and from the property.

Prior to any work being done within the State Highway Layout, the Grantee(s) must upload/submit a Work Request in the State Highway Access Permit System (SHAPS) to obtain approval for the proposed work schedule. Said form to be completed/uploaded can be found under the Forms and Sample Submission Documents tab and is entitled "Work Request Form D1 - D5". One (1) of these forms must be uploaded by the close of business every Thursday for the entire duration of the project in order to request approval for the following week's work schedule.

The Grantee(s) must adhere to 520 CMR 14.00: Excavation and Trench Safety as promulgated by the Department of Public Safety in conjunction with the Division of Occupational Safety pursuant to authority granted by M.G.L. c. 82a § 1. If not already approved, a Trench Permit Rider must be completed and uploaded to SHAPS before any trench work is performed under this Permit.

States of Emergencies and Executive Orders

In addition to the conditions and restrictions herein contained, the Grantee is responsible for complying with any relevant Executive Orders or State of Emergencies that may be issued by the Governor's office while this permit is active. The Governor may declare a State of Emergency in the event or imminent threat of natural or man-made disasters. A State of Emergency can cover a specific municipality, multiple communities, or the entire Commonwealth.

Detailed information on States of Emergencies and Executive Orders can be found on the Mass.Gov website https:/www.mass.gov/service-details/state-of-emergency-information and https:/www.mass.gov/Massachusetts-executve-orders

The Grantee or Applicant shall **record** any Vehicular Access Permit or any Non-Vehicular Access Permit involving drainage at the appropriate **Registry of Deeds**. Any permit issued by MassDOT, Highway Division, that requires recording shall not be effective until recorded at the appropriate registry of deeds and a copy of the recorded document is submitted to the District Highway Director.

The Grantee(s) must strictly adhere to the Order of Conditions (SE 272-0587) issued by the Rochester Conservation Commission, dated January 4, 2021, the conditions of the Site Plan Review approval issued by the Rochester Planning Board, dated January 26, 2021, and the conditions of the Hydrogeological Evaluation Report approval (X284342) issued by the Massachusetts Department of Environmental Protection, dated December 3, 2019, which shall be made an integral part of this Permit.

The Grantee(s) shall be responsible for all litter and debris generated from their property during the work as described herein and/or from all prospective residents, visitors or patrons of all existing or proposed facilities mentioned herein. This responsibility shall remain in effect for the entirety of all current or future owners of said property. The Grantee(s) shall perform routine inspections and upkeep within the State Highway Layout. If conditions warrant an individual to enter in or within the proximity of a travelled way, the Grantee(s) shall assume all liability and responsibility for the removal of all litter and debris or the hiring of an appropriate party to perform such duties. Significant work within the travelled way may require a police detail. In consideration to all abutters, the Grantee(s) must take notice to the drifting of debris and the removal thereof. If it is found that this requirement is not being fulfilled in a satisfactory manner, MassDOT, Highway Division may decide to clean the area at the Grantee's expense.

CONDITIONS FOR WORK RELATED TO SIDEWALKS, WHEELCHAIR RAMPS CONSTRUCTION

The Grantee(s) shall construct proposed sidewalks/wheelchair ramps as approved in the Permit Plans.

To install the granite curbing, the roadway shall be sawcut in neat, true lines. The granite curbing shall be installed according to MassDOT, Highway Division standards. All abutting edges of the existing pavement shall be coated with RS-1 emulsion immediately prior to the placement of the permanent hot mix asphalt.

Sidewalks/wheelchairs ramps must be graded in such a manner that no ponding of water occurs within the Highway Layout. If such ponding results, the Grantee(s) shall be responsible for its correction.

The Grantee(s) will construct sidewalks and handicap ramps in conformance with 521 CMR Rules and Regulations of the Architectural Access Board (AAB) and Americans with Disabilities Act (ADA) within all sidewalk areas included in this project. The approved driveway design, while depicting the detectable warning panels, is not an indication of conformance with AAB & ADA regulations. The Grantee(s) is solely responsible for ensuring the ramps, landing areas, and detectable panels are designed and constructed to meet AAB & ADA regulations. Please note that after the completion of this project, the Grantee(s) must contact the local building inspector or governing authority for a written approval of the installed sidewalks and wheelchair ramps.

In reference to poles located near wheelchair ramps or near the edge of the roadway, be advised that a minimum of 1-1/2' (feet) is required between the edge of the roadway and the face/front of the pole. Additionally, a minimum clear distance around poles shall be 3' (feet) excluding the width of curb.

The Grantee(s) shall be responsible for the maintenance and repair of the portion of the proposed sidewalk/wheelchair ramps located within the State Highway Layout and shall routinely inspect the sidewalk/wheelchair for deficiencies such as settling, heaving, cracks etc. This responsibility shall remain in effect until MassDOT, Highway Division reconstructs the sidewalk.

The Grantee(s) must contact the appropriate utility company to remove and reset any utility pole(s), hydrants or any other item located within the proposed sidewalk area. The Grantee(s) may be required to pay the utility company for all cost associated with relocating said items.

District 5, 1000 County Street Taunton, MA 02780
Tel: (857) 368-5000, Fax: (508) 880-6102
www.mass.gov/orgs/highway-division

DRAINAGE IMPACTS

Note that existing drainage lines are not located/marked out by Dig-Safe, therefore, care should be taken during excavation operations to ensure that drainage components located within the limit(s) of work are not impacted during work to be performed under this Permit. The Grantee(s) may send a request for drainage plans in anticipation of the work to the Highway Maintenance Engineer at Aidee.Cira@dot.state.ma.us. Requests should be sent a minimum of five (5) business days ahead of the proposed work. Be advised that if additional information is needed, the Grantee(s) will be required to perform survey work of the drainage structures to identify the location of the drainage components.

If the work under this Permit includes the installation or relocation of drainage structures or work alters the existing State drainage system, the Grantee(s) shall be responsible to clean the drainage system, including any other structure/drainage line/outfall within the project limits to ensure the drainage system works adequately.

The Grantee(s) shall be responsible for any damage that occurs to said drainage components as a result of the work. Should any damage(s) occur, the Grantee(s) must immediately contact the Highway Maintenance Section at (857) 368-5240.

TIME RESTRICTIONS AND NOTIFICATIONS

No work shall be performed in the hardened surface of the roadway between November 15th and April 1st of any year without prior written approval from the District Highway Director.

No pavement shall be laid between November 15th and April 1st of any year without prior written approval from the District Highway Director.

No work shall be performed on this project on Saturdays, Sundays, and Holidays, or on the Friday after a Thursday Holiday. Work is also restricted on the day before and the day after a long Holiday weekend without prior written approval by the District Highway Director.

No equipment, trucks, etc., shall occupy any part of the travelled way except between the hours of **9:00 a.m. and 3:00 p.m., Monday - Friday**. In no case will operations exceed the specified hours. This includes the placement of traffic control devices, equipment, or anything that restricts the flow of traffic through the construction zone. Any change in work hours will require prior written approval by the District Highway Director. The 12-minute rule will remain in effect for the duration of the permit.

All other work, off the pavement, on this project is restricted to a normal 8-hour day, Monday - Friday, with the prime Contractor and all subcontractors working on the same shift. Any change in work hours will require prior written approval by the District Highway Director.

GENERAL TRAFFIC MANAGEMENT AND SAFETY REQUIREMENTS

If required by MassDOT, Highway Division District Five, variable message boards (VMBs) utilized as part of the approved traffic management plan under this permit must be properly secured with regards to hacking and unauthorized tampering prevention. The Grantee(s) shall adhere to all appropriate security specifications and take all necessary precautions to mitigate the risk of the boards being hacked. All VMBs shall be stored in a secured area and shall have a lockable, weatherproof enclosure for the operator interface, removable local keyboards which shall be removed whenever possible, and a password protected controller with local administrative passwords changed on a regular basis.

If any portion of the roadway will be blocked with equipment to facilitate the proposed work, the Grantee(s) will be required to submit a Traffic Management Plan (TMP) to MassDOT, Highway Division, to be reviewed and approved by the District Traffic Maintenance Engineer prior to working within or impacting the roadway. The plan must include information relating to proper signing, traffic control device placement and police details.

It is imperative to maintain two-way traffic at all times and these operations are managed so that motorists travel "delay" is minimized. At any time during the operation when a traffic delay of over twelve (12) minutes occurs and the situation is worsening, the Resident Engineer, Contractor, or Police Detail will begin to suspend operations. Continuously increasing "delays" of over twelve (12) minutes are not to be permitted.

If traffic must be "stopped", the duration shall not be more than five (5) minutes.

Uniformed State/Local Police Officer(s) and their official vehicle(s) may be necessary to provide protection for those installing and removing all temporary traffic warning signs and devices and to perform all traffic management as required.

The Grantee(s) will monitor the flow of traffic during peak traffic volumes and if necessary, shall suspend all operations. Work will resume at the discretion of the Police detail officer and/or to the satisfaction of the supervising MassDOT, Highway Division, Engineer.

In the event of inclement weather or dense fog, which lessens the visibility of advance warning signs, vehicles and workers, the Grantee(s) will suspend all operations so as not to interfere with the safety of the motoring public and the operations of work. In the event of snow or icing conditions, all vehicles and equipment must be removed from the roadway and/or shoulder area so as not to interfere with Snow and Ice Operations.

The Grantee(s) shall provide safe and ready means of access and egress to all public and private roads and drives 24 hours per day. Every effort must be made as not to interfere with or inconvenience all abutters throughout the duration of this project.

Signs and traffic control devices are required for advance notice of the work and within the work area.
The Grantee(s) or Applicant will supply all required signs and traffic warning devices and shall be in accordance with the Massachusetts Manual on Uniform Traffic Control Devices. The number and location of all signs and devices shall be as deemed necessary by the Engineer for the safe and efficient performance of the work and the safety of the travelling public.

All warning devices shall be subject to removal, replacement, and/or repositioning by the applicant as often as deemed necessary by the Engineer.

Cones or non-reflectorized warning devices shall not be left in operating position on the highway when the daytime operations have ceased. If it becomes necessary for MassDOT, Highway Division, to remove the construction warning devices or their appurtenances from the project due to negligence by the applicant, all costs for this work will be charged to the Grantee(s).

All vehicles, except passenger's cars, which are assigned to the permitted project and which operate on the site at speeds of 25 MPH or less, shall have an official SLOW-MOVING VEHICLE emblem displayed. All vehicles and equipment on this project must be equipped with back-up alarms.

All personnel who are working on the travelled way or breakdown lanes shall wear approved safety vests and hard hats.

GENERAL CONDITIONS AND APPROVED PROCEDURES

The Grantee(s) must contact the "Dig Safe" Center at 811 to obtain a "Dig Safe" number prior to starting the proposed excavation for the purpose of identifying the location of underground utilities.

The Grantee(s) must remove any granite curb/edging or berm located within the area of the proposed drive to facilitate the construction of the driveway. All material will then be removed from within the State Highway Layout and properly stored or discarded at the expense of the Grantee(s) or Contractor. If the quality of the removed granite curb is in good condition, the Grantee(s) may reuse said pieces to close any existing drive mentioned herein. DO NOT return curbing to MassDOT, Highway Division.

The driveway(s) must be constructed on a minus grade (unless special conditions are granted herein) from the edge of the hardened surface to the State Highway Layout Line and graded in such a manner that no ponding of water occurs within the Highway Layout. The Grantee(s) shall be responsible for the disposal of all surface water from their property and the proposed driveways(s). If such run-off or ponding occurs, the Grantee(s) shall be responsible for its correction at their expense.
The driveway(s) shall have an 8" (inch) gravel base that has been machine compacted then paved with 4" (inches) of hot mix asphalt laid in two (2) courses consisting of a 2-1/2" (inch) intermediate course and a 1-1/2" (inch) surface course. Any hot mix asphalt berm or granite edging that exists in the driveway area must be sawcut and removed. The new pavement must butt into and not overlap the edge of the hardened surface of the roadway.

All abutting edges of the existing pavement shall be coated with a hot poured joint sealer immediately prior to the placement of the permanent bituminous concrete.

The Grantee(s) shall be responsible for the portion of the proposed drive(s) located within the State Highway Layout and shall routinely inspect them for deficiencies such as settling, heaving, cracks etc. Such deficiencies shall be corrected at the cost of the Grantee(s) and to the satisfaction of the Engineer.

If existing or proposed sidewalk is included in this project, the Grantee(s) will install concrete wheelchair ramps in conformance with the Architectural Access Board Regulations.

If the integrity of any existing sidewalks, catch basins, manholes or any other underground structures or equipment is compromised, the Grantee(s) will reconstruct and/or replace all items according to MassDOT, Highway Division, Standards at the cost of the Grantee(s) and to the satisfaction of the Engineer.

The Grantee(s) is responsible to ensure that the installation of the poles is in conformance with the rules and regulations of the Architectural Access Board (AAB), the Americans with Disabilities Act (ADA) and the MassDOT - Highway Division - Utility Accommodation Policy on State Highway Right of Way (May 2013). In reference to poles located near wheelchair ramps or near the edge of the roadway, be advised that a minimum of 1-1/2' (feet) is required between the edge of the roadway and the face/front of the pole. Additionally, a minimum clear distance around poles shall be 3' (feet), excluding the width of curb.

All traffic control signs installed on the Grantee(s) property, or any signs associated with said property, shall be maintained or replaced at the owner's expense. Furthermore, advertising signs and their structures whether portable or permanent, are not allowed within the State Highway Layout.

All present and future signs or structures located on the property of the Grantee(s) shall be at least 12/' (feet) from all lines of the State Highway.

The Grantee(s) must not disturb or remove any MassDOT, Highway Division, bound(s) (MHB) associated with this project. If so disturbed or missing, the bound(s) must be reset/replaced by a Registered Land Surveyor. All procedures and materials must be in compliance with Massachusetts Design and Construction Standards. A copy of the paid bill must be submitted to this office upon completion of said work.

All disturbed areas within the State Highway Layout must be graded, loamed, and seeded to the Engineer's satisfaction.

The Grantee(s) shall be responsible for all litter and debris generated during the proposed construction as described herein.

DRAINAGE AND UTILITY CASTINGS

"The use of risers to adjust drainage and utility structures will not be allowed. All adjustment work done to existing or new drainage structures shall conform to Section 220 of MassHighway Standard Specifications and according to Plates 201.3.0 and 202.9.0 of MassHighway Standards."

ENVIRONMENTAL LIABILITY AND COMPLIANCE

The Grantee(s) assumes all risk associated with any environmental condition within the subject property and shall be solely responsible for all costs associated with evaluating, assessing, and remediating, in accordance with all applicable laws, any environmental contamination (1) discovered during Grantee's work or activities under this Permit to the extent such evaluation, assessment or remediation is required for Grantee's work, or (2) resulting from the Grantee's work or activities under this Permit. The Grantee(s) shall notify MassDOT, Highway Division, of any such assessment and remediation activities.

The Grantee(s) is hereby held solely responsible for obtaining and maintaining any and all environmental compliance permits required by local, state, and federal laws and regulations when regular or emergency work is proposed within, or in close proximity to, any wetland area. These environmental compliance requirements include, but are not limited to, a Negative Determination of Applicability or Order of Conditions from the local Conservation Commission, a Water Quality Certificate from the Department of Environmental Protection, and a Programmatic General Permit from the U.S. Army Corps of Engineers. The Grantee(s) shall forward to MassDOT, Highway Division, a copy of each such environmental compliance permit.

CLOSING CONDITIONS

All of said work shall comply with the terms and conditions herein and must be done as directed by and to the satisfaction of the Engineer.

All work done under this contract shall be in conformance with the 2021 Edition of the MassDOT Highway Division Standard Specifications for Highways and Bridges and any subsequent "Supplemental Specifications". All construction shall conform to the October 2017 edition of the Massachusetts Department of Transportation, Highway Division "Construction Standard Details (English Edition)"; the latest Manual on Uniform Traffic Control Devices with Massachusetts Amendments; the latest edition to the following: the 1996 Construction and Traffic Standard Details (as related to Traffic Standard details only); the 1990 Standard Drawings for Traffic Signs and Supports; the 1968 Standard Drawings for Traffic Signals and Highway Lighting; the latest edition of American Standard for Nursery Stock; the Plans and these Special Provisions.

The Grantee(s) shall indemnify and save harmless the Commonwealth and MassDOT, Highway Division, against all suits, claims or liability of every name and nature arising at the time out of or in consequence of the acts of the

Grantee(s) in the performance of the work covered by this Permit and/or failure to comply with the terms and conditions of this Permit whether by themselves or their employees or subcontractors.

It is noted that the Grantee(s) will be responsible for future corrective actions resulting from defected work under the subject permit. Any damage to roadway and/or shoulder as a result of the permitted work is the Grantee's responsibility and shall be repaired at his/her expense.

The Completion of Work Form and supporting photos, along with a written letter of compliance from the local building inspector or governing authority with respect to the installed sidewalks and wheelchair ramps shall be electronically uploaded, via the State Highway Access Permit System (SHAPS), as soon as possible after the completion of the physical work to begin the sign-off process.

MassDOT, Highway Division, will hold the permit on file for a period of not less than three (3) years. If the completion of work form is not uploaded, the liability assumed under this permit will continue.

A copy of this permit must be on the job site at all times for inspection. Failure to have this permit available at the site will result in suspension of the rights granted by the Permit.

"FOLLOWING CONDITIONS APPLY TO PERMITS"
Conditions Relating Particularly to Permits for the Laying of Pipes, Conduits, etc.

After any pipes, conduits, drains or other underground structures are laid, or any excavation is made in the roadway, the trenches or openings shall be properly backfilled with suitable material, the back-filling shall be thoroughly tamped, and the surface of the road over said structures shall be left even with the adjoining ground. If the work is done in cold weather no frozen material shall be used for backfilling.

Wherever the hardened surface of the roadway, gutters, or any part of the surface of the highway is disturbed it shall be replaced in as good condition as before it was disturbed, and if new materials are required, they shall correspond with those already in place on the road.

Where service pipes are to cross the highway, the connections shall be made without disturbing the hardened surface of the roadway, by driving the pipes under the roadway, or the service pipes shall be carried under and across the road in a larger pipe, unless otherwise ordered by the Director.

The Grantee shall maintain the surface of the roadway over said structures as long as MassDOT may deem necessary, until all signs of the trenches shall have been eliminated.

Conditions Relating Particularly to Permits for the Erection of Poles, Wires, and Overhead Structures, and the Cutting and Trimming of Trees

In the erection of pole lines, unless otherwise herein provided, no trees located within the limits of the State Highway shall be cut or trimmed. No guy wires shall be attached to trees without a special Permit from MassDOT, and in no event shall they be so attached as to girdle the trees or in any way interfere with their growth. The wires shall be so protected at all time and places that they shall not interfere with or injure the trees either inside or outside the location of the highway.

Where the cutting or trimming of trees is authorized by this Permit, only such cutting, and trimming shall be done as may be designated by the Director.

In the construction or reconstruction of pole lines no guy wires shall be erected nearer to the surface of the ground than 6' (feet); provided, however, that the owners of such lines may maintain such guy wires at a lower elevation than 6' (feet) from the ground until such time as MassDOT shall notify them to remove said wires or to the elevation first stated.

In order to protect the trees through which any wires may pass, said wires shall be insulated and such other tree guards used as may be directed by the Director.
Where high tension wires are erected under this Permit, they shall be so located that, under conditions of maximum severity as regards a coating of ice or snow, there shall be a space of at least 8' (feet) between such high-tension wires and other wires.

The Grantee shall, within sixty (60) days from the date of completion of the work, file in the office of MassDOT a plan showing the location of each pole erected in accordance with the Permit, said plan to be of such size and in such form as MassDOT may direct.

General and Additional Conditions

Whenever the word "MassDOT" is used herein it shall mean the Massachusetts Department of Transportation of the Commonwealth of Massachusetts.

Whenever the word "Director" is used herein it shall mean the District Highway Director or other authorized representative of MassDOT.

Whenever the word "Grantee" is used herein it shall mean the person or persons, corporation or municipality to whom this Permit is granted, or their legal representatives.

During the progress of the work all structures underground and above ground shall be properly protected from damage or injury; such barriers shall be erected and maintained as may be necessary for the protection of the traveling public; the same shall be properly lighted at night; and the Grantee shall be responsible for the damages to persons or property due to or resulting from any work done under this Permit.

Except as herein authorized, no excavation shall be made, or obstacle placed within the limits of the State highways in such a manner as to interfere unnecessarily with the travel over said road.

If any grading of sidewalk work done under this Permit interferes with the drainage of the State highway in any way, such catch basins and outlets shall be constructed as may be necessary, in the opinion of the Director, to take proper care of such drainage.

Wherever the hardened surface of the roadway is disturbed and the Director may consider it necessary or advisable to do so, said surface will be restored by the employees of MassDOT, at such time as MassDOT may direct, and the expense thereof shall be borne by the Grantee, who shall purchase and deliver on the road the materials necessary for said work if and when directed by the Director. All payments to the supplier and to laborers, inspectors, etc., employed by MassDOT for or on account of the work herein contemplated shall be made by said Grantee forthwith on receipt of written orders, pay rolls, or vouchers approved by MassDOT.

IF THE GRANTEE DOES ANY WORK CONTRARY TO THE ORDERS OF THE DIRECTOR, AND, AFTER DUE NOTICE, FAILS TO CORRECT SUCH WORK OR TO REMOVE STRUCTURES OR MATERIALS ORDERED TO BE REMOVED, OR FAILS TO COMPLETE WITHIN THE SPECIFIED TIME THE WORK AUTHORIZED BY THIS PERMIT, MASSDOT MAY, WITH OR WITHOUT NOTICE, CORRECT OR COMPLETE SUCH WORK IN WHOLE OR IN PART, OR REMOVE SUCH STRUCTURES OR MATERIALS, AND THE GRANTEE SHALL REIMBURSE MASSDOT FOR ANY EXPENSE INCURRED IN CORRECTING AND/OR COMPLETING THE WORK OR REMOVING THE STRUCTURES OR MATERIALS.

ALL OF THE WORK HEREIN CONTEMPLATED SHALL BE DONE UNDER THE SUPERVISION AND TO THE SATISFACTION OF THE MASSACHUSETTS DEPARTMENT OF TRANSPORTATION, AND THE ENTIRE EXPENSE THEREOF SHALL BE BORNE BY THE GRANTEE.
On the completion of the work herein contemplated all rubbish and debris shall be removed and the roadway and roadsides shall be left neat and presentable and satisfactory to the Director.

MassDOT hereby reserves the right to order the change of location or the removal of any structure or structures authorized by this Permit at any time, said change or removal to be made by and at the expense of the Grantee or its / their successors or assigns.

This Permit may be modified or revoked at any time by MassDOT without rendering said MassDOT or the Commonwealth of Massachusetts liable in any way.

The Grantee shall pay the salary, subsistence, and travel expenses of any inspector appointed by MassDOT to supervise the work herein contemplated.

All of the above conditions shall be applicable to the work herein authorized, unless the same are inconsistent with the conditions on the face of the Permit, in which case the conditions written or printed on the face of the Permit shall apply.

The acceptance of this Permit or the doing of any work thereunder shall constitute an agreement by the Grantee to comply with all of the conditions and restrictions printed or written herein.

Charles D. Baker. Governor
Karyn E. Polito, Lieutenant Governor
Jamey Tesler, Secretary of Transportation & CEO
Jonathan L. Gulliver, Highway Administrator

5-2020-0529

Approved Signature

Mary-Joe Perry by B.T.
District Highway Director

Date of Issue: September 15, 2021

Permit Expiration: Thursday, September 15, 2022

District 5, 1000 County Street Taunton, MA 02780
Tel: (857) 368-5000, FAX: (508) 880-6102
www.mass.gov/orgs/highway-division

Appendix C – Wareham Fire District Rules and Regulations

WAREHAM FIRE DISTRICT
PLANNING, MATERIAL AND CONSTRUCTION SPECIFICATIONS
TABLE OF CONTENTS

1.0 PREFACE 2
2.0 DEFINITIONS 2
3.0 GENERAL NOTES 4
4.0 WATER MAIN MATERIALS 5
5.0 WATER SERVICE MATERIALS 8
6.0 WATER SERVICE APPLICATION PROCEDURE 9
7.0 PLANS 10
8.0 INSPECTIONS, TESTS, PERMITS, AND RECORDS 11
9.0 EXCAVATIONS 12
10.0 TRENCHING, BACKFILLING, AND PAVING 15
11.0 PRESSURE, CHLORINATING, AND BACTERIA TESTING 19
12.0 METER SET-UP 21
13.0 METERS REQUIRED 21
14.0 METER PITS 21
15.0 MANUFACTURED HOUSING - UNIT CHARGE AND MASTER METERS 22
16.0 SERVICE INACTIVATION 22
17.0 BACKFLOW DEVICES 22
18.0 WATER SERVICE CONFLICTS WITH SEPTIC OR SEWER 22
19.0 FIRE SERVICE 23
20.0 IRRIGATION SERVICES 23
21.0 NON-PAYMENT SHUT OFF POLICY 23
22.0 PAYMENT PLAN POLICY 24
23.0 FINAL READINGS FOR PROPERTY TRANSFER 25
24.0 RETURN CHECK POLICY 25
25.0 CUSTOMER REQUESTS FOR METER TESTING OR REPLACEMENT 25
26.0 STANDARD METER REPLACEMENT SCHEDULE 25
27.0 UTILITY MARK OUTS 26
28.0 SEASONAL DEMAND MANAGEMENT & SERVICE LINE LEAKS 26
29.0 RESIDENTIAL WATER SERVICE APPLICATION RULES 27
30.0 PLUMBING FAILURE – ABATEMENT POLICY 28
31.0 WATER METER TAMPERING POLICY 29
32.0 SCHEDULE OF RATES, FEES & CHARGES 31

APPENDICES 35

1.0 PREFACE

The intent of these rules is to provide customers, contractors, engineers, developers and others with a uniform set of regulations and standards by which any proposed or actual water work must adhere to these standards. These specifications may be amended from time to time at the discretion of the Board of Water Commissioners or their designee. Failure to know of, or conform to these specifications shall not be considered reason for deviation from these standards. It is the equal responsibility of the property owner and contractor to ensure proper compliance with the specifications as prescribed at the time of the work.

Property owners and contractors are encouraged to arrange for on-site pre-design and pre-construction meetings with the Superintendent or designee (Ph: 508-295-0450) to determine compliance with these specifications. Exceptions to these specifications may be granted if the deviation is in the benefit of the Wareham Fire District - Water Department (WFD), and upon written approval from the Board of Water Commissioners or their designee. Failure to comply with these rules may result in the termination of service. Any rule, regulation, or standard previously adopted by the Board of Water Commissioners or by the District not specifically addressed in these rules shall be enforceable as if it is part of these rules.

2.0 DEFINITIONS

Board or BoWC– Board of Water Commissioners

Certificate of Acceptance – Written verification from the Board of Water Commissioners or their designee, that all water system work is complete and without any outstanding deficiencies. Certificates of acceptance shall be issued by no sooner than one year after substantial completion of the work as determined by the WFD, and only if all deficiencies have been corrected.

Curb Stop Fee – A minimum fee charged to all inactive accounts as provided for in the rate schedule. A curb stop fee shall apply only to those accounts which 1) the water meter has been physically removed and returned to the Water Department, and 2) the curb stop is shut off. Inactive accounts that do not meet both conditions shall be charged the minimum fee even if shut off at the curb stop. The curb stop fee shall be charge twice annually to each account of record until such time the service is physically removed from the water system at the corporation stop.

Development Fees – A system development fee shall be paid for each new connection to either an existing main or a new service. The fee shall be paid prior to the connection being made by each new water taker. The development fee shall be based on tap size as listed in the rate schedule at the time service is required.

Dig Safe - Dig Safe® is a not-for-profit clearinghouse that notifies participating utility companies of your plans to dig. In turn, these utilities (or their contract locating companies) respond to mark out the location of their underground facilities. Dig Safe is a free service, funded entirely by its member utility companies and can be found at http://www.digsafe.com/ or by calling 811. Note:

1. Dig Safe does not mark utility lines. Participating utilities mark out utility locations.
2. WFD is <u>not</u> part of Dig Safe. All mark out requests must be made separately to WFD.

District – The Town of Wareham, Massachusetts less the area served by the Onset Fire District.

Engineer - The Districts' Consulting Engineer or his designated representative.

Inspector - The WFD Superintendent or his designated representative.

Inspection Service Fee – Three percent (3%) of the calculated total worth of the improvement to be paid prior to the commencement of work or time spent on site by WFD personnel at the current labor rates, whichever is greater.

Lateral or Non-Metered Connection – A water connection to any and all detached residential dwellings or commercial buildings after a meter. Each building serviced off a single meter shall be counted as a lateral connection and charged as prescribed in the rate schedule. Lateral water usage shall be included in the metered service allowance per billing.

Lead Free - The District only accepts service material, fittings, and meters which are considered "lead free." Lead free is as defined in the latest laws and regulations promulgated as well as associated amendments by the United States Environmental Protection (e.g. Lead and Copper Rule, Lead Contamination and Control Act, PART 141- National Primary Drinking Water Regulations: Part I, etc.), or Massachusetts Department of Environmental Protection.

Fire Protection (District) – Includes only those fire hydrants owned by the WFD and which are located within the public right-of-way. The water department is responsible for the repair, replacement and maintenance of fire hydrants owned by the WFD.

Fire Protection (Private and Town) – Includes both sprinkler systems and hydrants that: (1) provides exclusive protection to public or private building or parcel; or (2) is located on private property. Each privately/Town owned sprinkler and hydrant shall pay an annual "readiness to serve" charge in lieu of usage as prescribed in the rate schedule. The WFD is not responsible for the repair, replacement or maintenance of any private hydrant or sprinkler service.

Minimum Fee – A fee as described in the rate schedule charged to all active and inactive service accounts that have a water meter installed, or that are charged a flat fee (i.e. permitted manufactured housing or non-domestic un-metered accounts). The minimum fee shall be charge twice annually to each account of record.

Outside Water Sale – Water purchased from the tap at the Water Office at 2550 Cranberry Highway or from a metered hydrant.

Private - The term private is used to denote features and items which are not owned or accepted by the WFD.

Retainage– A specified amount retained by the District as a non-interest-bearing receipt calculated as two percent of the total worth of the improvement payable on substantial completion. The minimum retainage held as security shall be not less than $2,000.00. Said retainage shall be released only upon receipt of a written certificate of acceptance from the WFD.

Service Call – A service call is any customer initiated request for service. Service calls include but are not limited to, turn on/off, final readings, missed meter appointments, missed service appointments, relocating or reinstalling remote reading devices and meters, seasonal installations, inspections, and damaged meter replacements. A separate charge shall be established for scheduled and un-scheduled service calls. An un-scheduled service call is one where the service is provided on the day it is requested.

Specifications- Wareham Fire District Water Department Standard Specifications, Rules & Regulations as published and amended from time-to-time by the Board of Water Commissioners or their designee.

Standards - As a default position, the WFD uses American Water Works Association (AWWA) Standards and manuals of practice as the basis for products and practices. Where not specifically referenced here within, it should be understood these are the standards for materials and practices the WFD adheres to for day to day operation. The WFD also adheres to other industry standards common in the industry such as the Ductile Iron Research Association (DIPRA), National Sanitary Foundation (NSF), American National Standards Institute (ANSI) standards or as specifically reference here within. Where there is a conflict in one of these standards, the stricter standard will be adhered to for the product or practice.

Substantial Completion - The point in the work at which the WFD determines the installation is complete and all noted deficiencies as of that date have been corrected. Substantial completion does not constitute final approval or acceptance of the work for the release of retained funds held by the District.

Superintendent - The Water Superintendent of the Wareham Fire District Water Department.

Warranty Deposit - Funds held for addressing improper road cut trench and subsequent repairs. If road cut is within the paved area of the road, a $1,000 deposit will be held for 365 days. If road cut is within shoulder of the road, a $500 deposit will be held for 180 days. A request at the end of the time period must be made to WFD to release funds. At this time the WFD will inspect the road cut and if found satisfactory will refund the deposit. If the road cut is unsatisfactory, the contractor shall make the necessary repairs. If the contactor refuses to make the necessary repairs, the deposit will be used to make necessary repairs. Any remaining deposit after repairs will be provided back to owner.

Water - Potable water produced and supplied by the WFD.

Water Department or WFD - The Wareham Fire District Water Department, (WFD)

Water System (System) - Any pipe, valve, meter, fixture, facility, apparatus, or appendage that is in any way associated with the production, storage, transmission, and/or use of municipal water. The water system also can be referred to as the treatment and distribution system.

Work - The furnishing of materials, equipment, labor, and all incidentals necessary for adherence to these specifications.

3.0 GENERAL NOTES

Contractors should contact the Superintendent or designee at (508) 295-0450 for a pre-construction meeting, and an estimate of inspection charges, warranty charges, retainage charges, or any other charges, at least ten business days before the scheduled start of work.

Phased installation of water mains shall not be permitted in any new development unless specifically approved by the BoWC. The District reserves the right to retain water related securities until such time the installation, testing, and final inspection of all work is complete and deficiencies corrected for a period of one year after substantial completion.

Department personnel shall inspect water system improvements during the installation. The contractor is responsible for notifying the WFD five days before any work is to take place. WFD inspectors must be on site for the following:

1. Test pits, taps, tie-ins, or the installation of mains, hydrants and services.
2. When crossing any culvert, drainage pipe, stream or obstacle requiring a change in pipe material, direction, elevation, or as deemed necessary by the Superintendent.
3. Flushing, pressure testing disinfecting operations, dechlorination, and acceptance sampling 24 hours and 48 hours after dechlorination.

The Superintendent shall issue a Notice of Completion to the contractor when the improvements reach the point of substantial completion and all fees due to the WFD are paid in full. A Notice of Completion provided to the contractor does not relieve the property owner from correcting items identified as deficient during later inspections. WFD policy requires additional inspections of system improvements until the improvement is fully accepted. The WFD shall note each deficiency and may retain water related securities until the deficiencies are corrected. Property owners are encouraged to coordinate with the Superintendent before making a request for refunding securities to avoid delays in the release of securities.

Only licensed persons in the employment of the WFD shall operate any gate valve, hydrant, or curbstop on any main or service for turning water on or off.

No water shall be sold or taken from any hydrant, blowoff, corporation, or curbstop for any construction, paving, dust control, or hydro-seeding, or any other purposes without the permission of the Superintendent. All non-account water sold shall be through a meter and backflow owned and supplied by the WFD. The

charge for water sold shall be at current water rates. Any unauthorized use of water shall be reported by the WFD to the police for prosecution.

4.0 WATER MAIN MATERIALS

All water main materials used within the WFD system shall conform to ANSI/AWWA standards, and where applicable, have National Sanitary Foundation approval. All material must be installed as to have no leakage under 150 pounds hydrostatic pressure. In general, the WFD has standardized on lead-free materials and ductile iron for pipe and fittings. Cast iron fittings shall not be accepted.

PIPE: All water main pipe shall be buried at a depth of no less than 4.5 feet and not more than 6 feet deep and conform to one of the following standards:

a) District owned water mains

i. Class 52 (or better) or pressure class 350 North American made cement lined ductile iron pipe. Pipes will be manufactured by McWane Ductile, US Pipe, American Pipe, or approved equal.

ii. Pipe shall meet the latest revision of the following standards:

ANSI/AWWA	C104/A21.4	Cement - Mortar Linings
ANSI/AWWA	C105-A21.5	Polyethylene Encasement for Ductile Iron Pipe
ANSI/AWWA	C110/ A21.10	Ductile-Iron and Grey-Iron Fittings, 3 Inch Through 48 Inch for Water
ANSI/AWWA	C111/A21.11	Rubber - Gasket Joints
ANSI/AWWA	C115/A21.15	Flanged Pipe
ANSI/AWWA	C150/A21.50	Design
ANSI/AWWA	C151/A21.51	Water Pipe
ANSI/AWWA	C153/A21.53	Fittings - Ductile Iron
ANSI/AWWA	C600	Installation

iii. All products shall be constructed of ductile iron. Cast iron products are only acceptable if written permission is provided by the WFD.

b) **Private owned mains -** Beyond District owned gate valves:

i. Material listed in paragraph a) above or

ii. C-900 DR-14 PVC (Permitted only beyond District owned gate valves)

i. Where organic contaminants exist (e.g. petroleum) in the soil that are not compatible providing safe water with PVC pipe, PVC pipe shall not be used. In such situations only ductile iron pipe shall be acceptable.

iii. Fittings shall be ductile iron.

c) **Pipe Laying Conditions:** Pipe laying conditions shall be Type 5 (Table 1).

Table 1: Pipe Laying Conditions (Source: McWane Ductile)

LAYING CONDITIONS

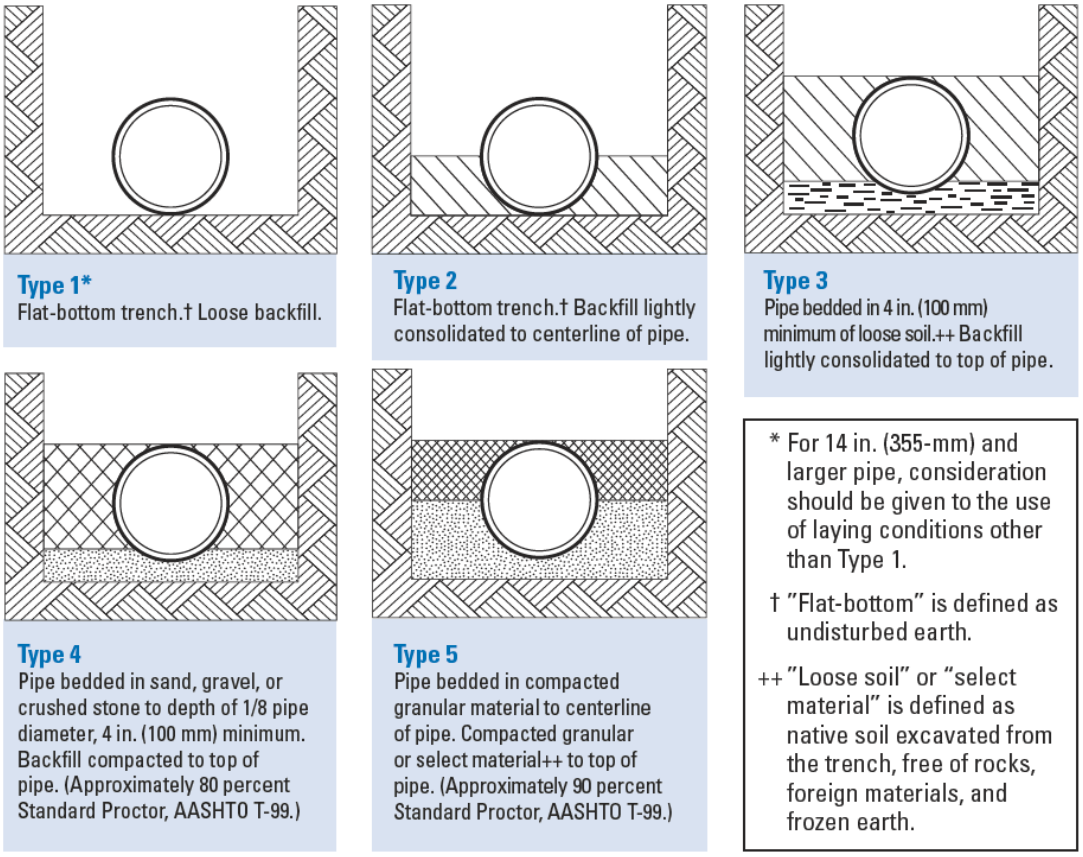

Notes:
Consideration of the pipe-zone embedment conditions included in this figure may be influenced by factors other than pipe strength. For additional information on pipe bedding and backfill, see ANSI/AWWA C600.

American Association of State Highway and Transportation Officials, 444 N. Capitol St. N.W., Suite 225, Washington, DC 20001.

d) **Minimum Size**: The sizing of water mains shall be based on sound engineering principals. All water mains shall be minimum 8-inch nominal diameter. All hydrant connections shall be minimum 6-inch diameter.

e) **Minimum Length**: Pipe length for water mains shall be no less than 18 feet.

f) **Pipe Protection from Corrosion**: Where there is possible excessive corrosion due to corrosive soil conditions, a polyethylene encasement for ductile iron pipe shall be implemented per ANSI/AWWA C105/A21.5 or ASTM A674. Soil corrosivity testing shall be performed by a N.A.C.E. International certified personnel. All contractors installing pipe are required to perform this test and provide the results to the WFD.

g) **Restraining System:** All pipes shall be restrained. Restraints shall be provided by Sure Stop 350 gaskets for sizes 3 inch to 24 inches in diameter and TR Flex over 24 inches in diameter or equal by approved manufacturers (Field Lok 350, Fast grip). Where soil is believed to provide the necessary friction for restraint, permission shall be obtained by the WFD in writing and calculations by certified by a professional engineer in the state of

Massachusetts shall be provided. Thrust blocks or mechanical joint restraints can be provided as described below are acceptable alternatives where appropriate.

h) **Water Body Crossing:** When it is necessary to cross a body of water requiring only a small deflection in the joints, restrained standard push-on or mechanical joint pipe can be used. If the water is deep and the angle of deflection in the joint necessary to follow the contour of the riverbed is great, ball and socket pipe–with a deflection up to 15 degrees should be used. A combination of restrained and ball and socket joints shall be used.

i) **Gaskets**: Gaskets shall be used for appropriate application and contaminants present and meet AWWA standards. Nitrile gaskets shall be used where petroleum contamination exists. Manufacture recommended joint lubricants shall be used during assembly.

j) **Electrical Grounding**: No electrical grounds shall be made on water pipes, water services, fitting, water meters, or any other appurtenance. Electrical grounding shall be provided in accordance with the Massachusetts Electric Code.

k) **Looping**: Dead ends shall be minimized by looping of all mains when practical, from one part of the system to another. When dead end mains are allowed by WFD in writing, they shall be equipped with the means to provide adequate flushing which will give a velocity of 3.0 feet per second or greater in the main being flushed or provided with an automatic flushing unit at the discretion of the WFD. The WFD may also require a meter pit and meter associated with the automatic flushing unit.

PIPE FITTINGS: All pipe fittings shall be mechanical joint ductile iron class 350 conforming to AWWA standard C-153 and constructed of ductile iron. All mechanical joints shall be secured with a restraint as defined below.

Similar to pipe, the fitting shall be wrapped in polyethylene if the soil conditions are found to be corrosive.

MECHANICAL JOINT RESTRAINTS: Retaining glands shall be provided wherever any water pipe is inserted into any valve, hydrant, or fitting, unless approved by WFD to do otherwise. Due to the varied pressures found in the system, the use of non-restraint type mechanical joint glands for the purpose of inserting pipe into any valve, hydrant or fitting is not authorized and will require replacement if used. The use of thrust blocking in addition to mechanical restraints is at the discretion of the contractor. The following retaining devices are approved for fittings, hydrants, and valves:

a. Mega-Lug® restraints
b. GripRing® restraints
c. or approved equal.

VALVES: All gate, hydrant, and tapping valves shall open left and conform to AWWA Standard C-509 for resilient wedge valves constructed of ductile iron. The distance from the top of the valve nut to *final* grade should be no greater than six (6) feet. Valves buried greater than six (6) feet below *final* grade require an extension on the valve nut. Valves shall be operated through a 5¼ valve box. AWWA C515 - Standard for Reduced-Wall Resilient Seated Gate Valves for Water Supply Service shall only be acceptable if provided in writing by the WFD. Gate valves shall be constructed of ductile iron.

TAPPING SLEEVES: Tapping sleeves shall be full circumference shell and seal 316 stainless steel. Please note that for existing asbestos cement pipe that exists in the distribution system, contractors should determine the pipe Outside Diameter (OD) by test pitting before ordering the sleeve. Sleeves that do not properly fit the OD will be rejected.

AIR RELEASE VALVES: Air release valves are not permitted for use in the WFD system unless specifically approved in writing by WFD.

TESTING AND BLOWOFF ASSEMBLIES: Blowoff assemblies for air purging, pressure testing, and disinfection shall be temporary installations. The WFD requires a one (1) inch assembly consisting only of a tapping saddle, one-inch corporation, and HDPE tubing. Ten feet of tubing should remain above grade for pressure testing and disinfection purposes. Assemblies should be installed as close to the main line tap as possible, yet be safely out of the travel way. Consideration should be given to the need to re-excavate the corporation once testing is complete. Upon successful completion of required testing, the tubing will be removed from the corporation, and the corporation closed at the saddle. Hydrants located "in-line" at the end of any main may be used for flushing instead of a blowoff assembly.

FIRE HYDRANTS: All fire hydrants shall meet AWWA C502: Standards for Dry-Barrel Fire Hydrants. Hydrants shall be 5¼-inch diameter open left valve Mueller Super Centurion traffic model hydrants. All hydrants shall have a gate valve attached to an anchoring tee. Hydrants shall be painted in accordance with WFD color scheme. Steamer port shall be painted as to indicate main line diameter. The steamer port invert shall be 18 inches above *final* grade. Barrel risers will be installed as required.

VALVE BOXES: All gate and hydrant valves shall be operated through a North American made water valve box. The box shall consist of a cover marked “water”, a bell or flared base, and a 5¼-inch diameter top flanged sliding top. The valve box shall measure the length from the valve body to the finished grade plus six (6) inches. All valve nuts shall be centered and plumb in the box at a depth of between four and one half (4 ½) and six (6) feet below *final* grade. Valves buried greater than six (6) feet below *final* grade will require a centering extension rod drilled and tapped onto the valve nut.

VALVE BOX EXTENSIONS: Valve boxes may be brought to final grade utilizing 5¼ by 12 inch valve box flanged extensions. Pioneer style extensions are not acceptable for this application.

COUPLINGS: Couplings used in the installation, joining, or repair of water main pipe shall be "Dresser" style constructed of ductile iron. All couplings will be of the same nominal diameter as the pipe. Gaskets and end rings shall be sized to compensate for variations in pipe OD and materials.

PIPE REPAIR CLAMPS: Leaks along the longitudinal length of a pipe may be repaired in place using clamps. Repair clamps shall be full circumference shell and seal 316 stainless steel sized to properly fit the OD of the pipe being repaired.

BELL JOINT LEAK CLAMPS: Leaks from pipe bell joints may be repaired in place using joint clamps properly sized for the pipe.

5.0 WATER SERVICE MATERIALS

Water services shall be either one (1) or two (2) inch taps. All connections shall be compression type fittings with stainless steel inserts; flared fittings are not permitted. All material must be installed as to have no leakage under pressure. Water services shall be sized in accordance with AWWA M-22. The use of polyethylene pipe and tubing shall be used for water services 2 inches in diameter and smaller. Water services that are larger than 2-inches in diameter shall use cement lined ductile iron water pipe. The WFD has standardized on lead-free service connections manufactured by either Mueller or Ford.

No electrical grounds shall be made on water service pipes. Electrical grounding shall be provided in accordance with the Massachusetts Electric Code.

RESIDENTIAL METERS: Residential meters shall be 5/8" x 3/4" electromagnetic type capable of providing 25 gallons per minute maximum flow with an accuracy rating of >98.5 percent. Check with WFD on current makes and models accepted by the WFD. Meters, regardless of size, shall only be purchased from the WFD. All meters shall remain the sole property of the District. Requests for a meter larger than 5/8" x 3/4" will require the submission of a fixture analysis prepared in accordance with AWWA M-22 standards and Massachusetts Statutes and Regulations.

INDUSTRIAL/COMMERCIAL METERS: Industrial/commercial meters are 1 inch or greater in size and purchased through the WFD and installed by WFD or a licensed plumber. Check with WFD on current model(s).

The WFD shall inspect the installation before final approval.

SERVICE SADDLES: All water services shall be saddled. No direct service or blowoff taps are permitted. Saddles shall be CC threads with double anodized steel bands, and high strength ductile iron body sized to properly fit DI, PVC or AC pipe. Zinc caps shall be provided to protect steel bands.

WATER SERVICE TUBING: All water service tubing shall be Copper Tube Size (CTS) Polyethylene (HDPE) tubing with a working pressure of no less then 200 PSI, conforming to AWWA C-901. Tracing wire on plastic tubing is required for locating the pipe. Tracing wire shall be 12 gauge wire or thicker.

CORPORATION STOP: Corporation stops shall be an open left Mueller style compression ball stops with a tapered CC thread and a compression pack joint (CPPJ) for CTS tubing conforming to AWWA C-800 standards. Corporation stop shall be manufactured by Mueller or approved equal.

STAINLESS STEEL INSERTS: Stainless steel inserts shall be compatible for use with 200 psi CTS HDPE flexible water service tubing and shall be used with all compression fittings.

CURB STOP: Curb stops shall be open left ball valve with Mueller style compression type pack joints (CCPJ) on both ends, and shall be compatible for use with CTS HDPE tubing. Curb stop shall be manufactured by Mueller or approved equal.

THREE PART UNION: This service fitting has a Mueller style compression type pack joints (CCPJ) on both ends and is compatible for use with CTS HDPE tubing.

MALE and FEMALE CPPJ X IP ADAPTERS: Adapters are to be used with CTS HDPE tubing having a Mueller style compression type pack joint on one end, and iron pipe thread on the other.

CURB BOX: All water service boxes shall be North American made "Buffalo" Style 2½ inch to include cover, slide top and base. The curb box shall measure the length from the curb stop to the finished grade plus six (6) inches. All curb stops shall be centered and plumb in the box at a depth of between four and one half (4 ½) and six (6) feet below *final* grade.

BACKFLOW DEVICES: A backflow device shall protect all services. A Watts #7 dual check valve shall protect residential services. A pressure vacuum breaker, reduced pressure zone device, or a testable double check valve shall independently protect irrigation systems. A device as specified by the WFD consistent with the hazard potential shall protect commercial and industrial services. A testable double check valve or reduced pressure zone device shall protect fire protection systems as specified by the WFD.

6.0 WATER SERVICE APPLICATION PROCEDURE

APPLICATION – The property owner or their designated representative shall complete a Water Service Application Card upon which the property owner or their designated representative shall receive a copy of the "RESIDENTIAL WATER SERVICE APPLICATION RULES". Applications are available at the Water Department. The system development fee shall be paid at the time the application is made. Building permit signoffs require completion of a Water Service Application Card. Note: Filing the application activates the account for billing.

Filing of Water Service Application shall include payment of all fees due and if deemed necessary shall include the cost for running a hydraulic model by the WFD engineer. Applications should be submitted ten (10) business days before the installation of the service. Application fees include a 5/8th inch meter and initial turn

on fee. Tapping fees are additional[1]. Meters larger than 5/8th - inch shall be paid for in whole by the applicant. All meters regardless of size shall be purchased from the WFD.

SCHEDULING SERVICE TAP
Upon application, the owner/contractor can schedule the tap with the Operations Manager, (580) 295-0450. A pre-installation site visit is required. Owner is responsible for road cut, trenching, backfill, road repair, and traffic control within the right-of-way. Installers must be on WFD's approved contractor list which can be obtained from the District front office. Meter pits may be required depending on site conditions as determined by the WFD. On water services that are greater than 200 feet in length, the owner will be required to purchase and install a meter pit. The meter pit shall be as close to the road as possible and at the direction and approval of WFD.

Owner shall obtain all permits for the road cut, including:

1. Dig safe number
2. Wareham Municipal Maintenance Excavation Permit, which can be obtained for applicant by WFD
3. State Department of Transportation trenching permit (State Roads Only)

SERVICE LINE INSPECTION FROM CURB STOP TO FOUNDATION- Only licensed master plumbers or drain layers are permitted to install water service lines. Installers must be on WFD's approved contractor list which can be obtained from the District front office. Inspections shall be scheduled with the water department at 508 295-0450. Inspections must be scheduled before 2:00 PM on the workday before the actual installation. There is no charge for scheduled inspections. Requests for same day inspections require a $70.00 service fee.

Inspections must be done before backfilling the trench. Backfill shall be suitable material free of debris and stones greater than 4-inch in size. Inspection on backfilled lines requires a pressure test. A valve must be installed on the service line inside the foundation for the inspection to be performed. Owner shall be responsible for all costs associated with installing the service line from curb stop to meter.

Service lines shall be installed in Type 3 laying conditions (See Table 1).

METER INSTALLATION - The meter setup and backflow device must be installed according to WFD specifications before the meter can be set. Water meters shall be installed and water turned on only by water department personnel. Meter appointments shall be scheduled with the water department at (508) 295-0450. Meter installations must be scheduled before 2:00 PM on the workday before the actual installation. There is no charge for scheduled appointments. Requests for same day installations require a $70.00 service fee.

7.0 PLANS

SINGLE SERVICES - Plans for a single residential service shall be required. The proposed location of the water service shall be shown on plan in relation to the dwelling and roadway. The precise location of the water service may be altered in the field with the concurrence of the WFD. A detail plan may be required for installations >150 feet in length, that cross wet or wooded lots, are within 10 feet of a septic system, require a meter pit, or where a plan would benefit the WFD. No water service will be permitted to any building connected to a well and obtain water service from the well. Buildings on properties with wells may be serviced provided there is no physical connection between the well and the plumbing serviced by District

[1] Tapping charge (if required) pays only for the equipment, material and labor for the water main tap to curbstop. No excavation or road repair work is included. Chargeable items include; tapping/boring machine, vehicles /equipment, corporation stop, PVC tubing; curb stop, 2 ½ inch curb box, and hours of total labor. Road boring costs for cross road services shall be additional. All additional material and labor costs incurred by the District because of owner or contractor inefficiency, delay, cancellations, or site conditions shall be charged to the owner. Police details, Town of Wareham Road opening permit (e.g. excavation permit), and all other permits required shall be paid for by the owner.

water. If deemed necessary, the WFD may required a water model be run by the WFD's engineering to confirm water availability and pressure. Cost for this model shall be covered by the owner.

WATER MAINS - Requests for water mains must be pre-approved by the BoWC. The minimum main for sub-division greater than ten units shall be eight (8)-inch. Sub-divisions of less than ten units may install a six (6)-inch pipe if adequate fire flow is documented by hydraulic modeling by the WFD's engineer. The pre-approval of water mains requires the submission of plans prepared by a professional engineer. All plans shall contain the note: "Installation of all mains, valves, hydrants and services shall be in accordance with the latest published WFD Specifications and Rate Schedules". The WFD requires the submission of the following plans for approval.

1. **WATER MODEL PLANS** – Water availability models are required for all developments, unless chosen by WFD to do otherwise. Two (2) copies of modeling plans shall be provided directly to the Superintendent during the planning phase of the development. Modeling plans are conceptual in nature used to determine the District's ability to provide adequate fire flow (750 gpm or better) while maintaining residual system pressure (25 psi) under peak demand conditions. Modeling plans shall be prepared on **one (1) sheet** and contain both a plan and profile view of the proposed extension. The plan view shall include lot lines, and the pipe layout. The profile view shall show pipe depth in relation to existing and final grades. Both the plan and profile views shall depict stations at 100 foot intervals. Plans should be clearly delineate water assets. Plans, which contain excessive topographical, drainage, landscaping, roadway, or other non-water, related notes, details or drawings, will be rejected without review. A data block shall include sub-division name, developer and engineer contacts, lot numbers, average lot and dwelling sizes, type of development, connecting and proposed street names, pipe size and type and other necessary information.

2. **TECHNICAL REVIEW PLANS -** The technical review (TR) plan shall be similar to the model plan only in greater detail and without the profile view. TR plans shall indicate the general layout of the water improvements in relation to other underground utilities and lots. In place of the profile view will be the notes and details necessary for the Superintendent to review the plan. TR plans should be prepared on **one (1) sheet**. TR plans, which contain excessive topographical, landscaping or other non-water related notes, details or drawings, will be rejected without review. Two copies of the TR plan will be supplied directly to the WFD.

3. **FIELD PLANS -** Field plans are the TR plans except they contain the revisions noted during the review process. Field plans are used by the WFD during pre-construction and construction activities for planning and inspection purposes. Construction plans are not acceptable for use as field plans. During pre-construction and construction activities, the Superintendent may agree to, or require, minor modifications to the field plan if the revision benefits the District. Field plans shall be prepared on **one (1) sheet** and contain no non-water related information. Two copies of the field plan will be supplied directly to the WFD before the pre-construction site meeting.

4. **AS BUILT PLANS -** As-Built plans shall be submitted to the District upon completion of the work. As-built plans shall accurately reflect the installation of the water main. As-built plans shall be clearly marked as such. As-built plans will be used in retainage reduction inspections of the completed work. Submission of as-built plans to the WFD is required before the release of any water related securities held by the District. As built plans shall be similar to field plans, but include the measurements, swing ties, depths and other information relating to the installation. As-built plans shall be prepared and stamped by a professional engineer or land surveyor in accordance with the requirements of the Superintendent.

8.0 INSPECTIONS, TESTS, PERMITS, AND RECORDS

Contractor shall coordinate with the Superintendent for inspections and the calculation of the inspection services fee. The contractor shall arrange and pay for all required tests. WFD must be present on-site at the initiation of the test for it to be validated by the Superintendent. The contractor is responsible for obtaining and having on site, excavation permits to include Digsafe, Wareham Municipal Maintenance Department or

Mass DOT excavation road cut permits. No water work shall take place without the proper permits and or details in place. The property owner is responsible for keeping accurate records to produce "as-built" plans. Any fees required for obtaining permits are the responsibility of the contractor.

Inspection services provided by the WFD do not guarantee the quality of workmanship or the functionality of the improvement at the time of installation or thereafter. Inspections provided by the WFD are to determine that materials used and the installation procedure complies with these specifications. No District approval of the work, design, materials or installation is expressed or implied with an inspection.

9.0 EXCAVATIONS

Excavations shall follow all local, State, and Federal safety regulations. The following are specific rules and requirements for excavations within the WFD. Where there is a conflict here with the Wareham Municipal Maintenance Department rules and regulations for road, the guidelines from the Wareham Municipal Maintenance Department rules and regulations shall apply over the Water Department rules and regulations for road repairs.

a) Excavation Permits
   1. Excavation permits obtained by the WFD on behalf of another party shall require the posting of a cash deposit of $500.00 for unimproved roadway or shoulder excavations, and $1,000.00 for improved or paved road excavations. The deposit shall be retained without interest until a release of the permit is granted from the Town. Deposits are released upon written request and release.

b) No excavation shall remain open after working hours (7:30 a.m. to 4:00 p.m.) unless provided in writing by the WFD. All excavations shall be backfilled and paved, or covered with steel plates as approved by DPW at the end of work each day. During working hours, open excavations shall be attended to help prevent falls in unauthorized access.

c) The maximum length of open trench permissible at any time shall be two hundred (200) feet, and no greater length shall be opened for pavement removal excavation, construction, backfilling, repairing, or any other operation without the express written permission of the WFD.

d) Excavations across Town or State roadways will require the utilization of "trenchless technology" and/or the use of a “flowable fill” type material as discussed below. Deviations from this will be required in writing from the WFD.

e) Workmanship:
   1. The Contractor shall furnish all materials and conduct the job in an orderly, timely, quality-controlled manner.
   2. The Contractor shall keep a competent foreman and sufficient competent employees to carry on the work with proper speed and in accordance with the requirements of law and other public authorities and to the reasonable satisfaction of the WFD
   3. The Contractor shall conduct the work in a manner that will not unreasonably interfere with other work being done by the Town or WFD, by contract or otherwise. If deemed necessary by the WFD, the work done under these standards shall conform to the progress of said other work. The Contractor shall cooperate with the contractors or employees who may be doing work for the Town or WFD, and with public service corporations affected by the work in arranging for storage places, temporary support for structures, repairs, etc.
   4. All temporary repairs shall be properly maintained by the Contractor to assure good rideability conditions until the end of the guarantee period or until permanent restoration has been made, whichever first occurs.
   5. Permanent pavement restoration accomplished by utility companies shall be properly maintained to assure good rideability conditions until acceptance by the WFD and Town.

f) Removal of asphalt pavement:

1. All initial excavations into paved street surfaces shall be precut in a neat line with pavement breakers or saws.
2. Saw cutting is the preferred method for work done for the WFD. The use of hydro-hammers or heavy-duty pavement breakers for breaking pavement are limited on all streets unless written permission is granted by the WFD for their use after due consideration of the location, the condition of the street, and the depth of saw cutting required ahead of the use of the hammers.
3. No irregular pavement cut shapes will be allowed. No shape will be allowed that would prevent compaction equipment from adequately compacting all of the area.
4. The shape of pavement cutouts shall be rectangular, or a combination of rectangular and square shapes unless otherwise agreed to by the WFD and Contractor.
5. Pavement edges shall be trimmed to a neat vertical face free of loose materials and neatly aligned with the centerline of the trench.
6. Unstable pavement shall be removed over cave outs and overbreaks and the subgrade shall be treated as the main trench.
7. The Contractor shall make every effort to avoid damage to existing pavement to remain. Any damage shall be promptly repaired by the Contractor.

g) Removal of concrete pavement:
   1. Sawcutting of reinforced Portland cement concrete is required with the depth of the cut being the full depth of the pavement unless otherwise directed by the WFD to retain reinforcement.
   2. Sawcutting may be required by the WFD outside of the limits of the excavation over cave-outs, overbreaks and small floating sections.
   3. Reinforced concrete pavement, to the extent possible, shall be removed without cutting the reinforcement. The bars or mesh, when cut, shall be severed as close to the center of the trench as practicable and bent back to permit accomplishment of the work. When the pavement is ready to be permanently replaced, the reinforcement shall be bent back into position and reinforced with other bars or mesh which shall overlap the ends of existing reinforcement not less than twelve (12) inches and be securely wired together.
   4. Contact faces between new and existing concrete pavement shall be bonded using an approved epoxy binding agent installed and applied in accordance with the manufacturer's instructions, unless otherwise directed by the WFD.

h) All material excavated from trenches and piled adjacent to the trench or in any street shall be piled and maintained in a manner that will not endanger those working in the trench, pedestrians or users of the streets, and so that as little inconvenience and obstruction as possible is caused to those using streets and adjoining property. The excavated material shall be hauled away from the site by the end of each working day.

i) The Contractor shall secure the necessary permission and make all necessary arrangements for all required storage and disposal sites.

j) When excavated material is laid along the side of the trench, it shall be kept trimmed. Whenever necessary in order to expedite the flow of traffic or to abate the dirt or dust nuisance, toe boards or bins may be required by the WFD to prevent the spreading of dirt into traffic lanes. If any portion of the excavated material is allowed to be used as backfill, it shall be stockpiled separately from all other materials.

k) Sections of sidewalks and curbs shall be removed to the nearest real joint or scoreline.

l) Tunneling, boring or other methods may be required by the WFD to avoid or minimize pavement removal.

m) Special Condition(s)
   1. Traffic Management Plan

i. The Contractor shall prepare, and submit to the WFD, a plan that shows the routing of traffic during construction. The plan shall show the area and dimensions of the roadway pavement available for traffic during each stage of the work. The plan shall include all temporary barriers, signs, pavement markings, drums and other traffic control devices required to maintain traffic together with the limits of temporary pavement and necessary steel plates. The plan shall include all the requirements by the Town of Wareham Municipal Maintenance for road openings, or MassDOT requirements.

2. Steel Plates
   i. Design Requirements:
      1. The Contractor shall select and design the temporary steel plate and supporting system. The design calculations and Drawings shall be prepared, signed, and stamped by a Professional Engineer registered in the Commonwealth of Massachusetts experienced in design of temporary traffic decking.
      2. Design shall be in accordance with Loads and Design Criteria standard to the industry for this type of work, and with the following requirements:
         a. For vehicular ramps, limit maximum grade to 5 percent.
         b. For pedestrian ramps, limit maximum grade to 8 percent.
         c. Conform with Americans with Disabilities Act Accessibility Guidelines (ADAAG) at all pedestrian traffic locations.
         d. Design of support members shall allow clearances for existing and relocated utilities.
         e. Provide access to utilities, fire hydrants, and other facilities requiring unique access. Requirements at each site shall be obtained from the respective agencies affected.
         f. Plates shall overlap the trench width by at least 2 feet on each side.
   ii. Construction Methods:
      1. Install and maintain the temporary steel plate systems only with express WFD approval.
      2. Not more than two (2) steel plates shall be used at any time.
      3. Steel plates shall not be used between November 15 and April 15 or at any time when snow is forecasted.
      4. Place 48” x 48” orange and black construction sign, stating “Steel Plates 100 feet” to provide drivers with advanced notice.
      5. Provide wood wedges under plate edges at uneven surfaces to minimize movement.
      6. Provide temporary asphalt at the plate edges to provide lessen impact to vehicle traffic or trip hazard to pedestrian traffic and to assist in holder plate in place.
   iii. Maintenance:
      1. Inspect the condition of temporary steel plates at least once a day. Continuously maintain plates to conform to design requirements and construction requirements. Immediately repair defects such as broken, bent, or loose plate members, and protruding fasteners. Patch adjacent paving as potholes develop, and immediately re-secure and bed loose transition members, plates, and ramps to the existing pavement.
      2. Maintain steel plates free of accumulations of snow, ice, water, mud, and debris.
      3. Perform maintenance, repair, or replacement whenever there is noticeable deterioration of any material or component from its original conditions

10.0 TRENCHING, BACKFILLING, and PAVING

The minimum depth of cover over the spring line, crown, or top of the pipe shall not be less than 4½ feet and no more than 6 feet at the time of installation. In such cases where 4 ½ feet of cover is not possible, the piping shall be appropriately insulated water pipe. Where there is a conflict here with the Wareham Municipal Maintenance Department rules and regulations for road repair (temporary and permanent), the guidelines from the Wareham Municipal Maintenance Department rules and regulations shall apply over the Water Department rules and regulations for road repairs.

The trench bottom and sidewalls shall be free of boulders, protruding ledge, stones larger than four inches, roots, trash, asphalt, debris or other unsuitable materials. Backfill shall likewise be free of boulders, ledge, stones larger than four inches, roots, trash, asphalt, debris, clay, fine sand or other unsuitable materials. Pipe laying shall be type 5 for water mains and type 3 for service lines (See Table 1).

The following are the rules and requirements for trenching, backfilling, and paving:

a) Trenching
   1. Any trench or backfill that is unsuitable in the opinion of the WFD due to depth, stability, wetness or clay content shall be rejected for use.
   2. Trench bottoms shall be at a uniform depth to grade at installation. Irregular trench bottoms may be made uniform using a bedding material six inches in depth. Bedding material shall meet the same standards as the backfill previously described. Pipes shall be installed only in dry trenches. All open ends of pipe shall be closed off to prevent water, dirt, animals, or other foreign substances from entering the pipe.

b) Backfill
   1. Before backfilling, the Contractor shall notify the WFD for inspection. Backfilling shall not occur without WFD approval.
   2. In unpaved areas, excavations shall be backfilled as directed by the WFD with approved material thoroughly compacted in layers not to exceed twelve inches (12 inches) in thickness until flush with the surrounding ground surface. If the backfilled material settles, additional approved materials shall be installed by the Contractor, as required, to keep the surface even. After settlement is completed, the excavated area shall be left by the Contractor in as good a condition as before the work was started.
   3. Temporary sheeting and bracing used to support the side walls shall be removed, unless otherwise directed by the WFD, as backfilling progresses. When backfilling has reached the bottom of a brace, the latter and its horizontal ranger shall be removed, and this procedure shall be repeated throughout the backfilling operation. The sheeting shall be pulled in short increments, care being taken to avoid significant lateral movements of the sides of the trench. During and after pulling the sheeting, the backfill in the space formerly occupied by the sheeting shall be compacted.
   4. Whenever water is found standing in the excavation area, the water shall be removed by pump or other means before backfilling operations may commence.
   5. Backfilling shall be performed as soon as practicable so that the least possible subsequent settling will occur. In most cases backfilling shall occur on the same day as the excavation was begun. If this is not feasible due to the complex nature of work, emergency, or unpreventable conditions, the Contractor shall notify the WFD that same day, if not sooner, and take appropriate measures to protect public safety and infrastructure until work commences again the following day.
   6. Backfill in paved areas shall be granular gravel borrow, processed gravel, sand or crushed stone material (dependant on the specific utility) placed to a depth of 1 foot over the utility. In paved areas, trenches shall be backfilled in 12-inch lifts. Each lift shall be thoroughly compacted by means of a vibratory or mechanical compactor before the next lift is laid in place. The backfill shall be placed up to the pavement subgrade surface.
   7. Broken pavement, large stones, roots and other debris shall not be used in backfill. Unused excavated material shall be removed from the jobsite and disposed of in a manner that will

minimize interference and obstruction with pedestrian and vehicular traffic. No material shall be left within the right-of-way once the repair and/or installation is complete.

8. WFD may require the use of Excavatable Controlled Density Fill (CDF or Flowable Fill) during backfilling. Within the limits of the pavement, the trench shall be backfilled with Flowable Fill to an elevation of four (4) inches below the top of the paved surface. The following additional conditions must be met:
    a. Only Type IE, Excavatable Fill will be allowed.
    b. This material shall not be used for bedding material or in situations that will cause floating of the utility lines, or in the presence of cast iron or steel pipes.
    c. CDF placement in trenches shall be fully barricaded or police protected for a minimum of three (3) hours after the pour or until a set is reached that will prevent a hazard to animals or humans.
    d. CDF shall be separated from gas lines with a minimum of six (6) inches of sand cover over the lines.
    e. Excavations that cross or extend into the public right-of-way shall be saw cut and backfilled with a "flowable fill" type material to grade and allowed to cure for at least 24 hours before the application of the binder coat. Contractor is responsible for maintaining at least one lane of traffic flow using road plates or barricades as well as meeting all State and Federal safety requirements.

c) Temporary Pavement

1. Upon the completion of proper backfilling, the Contractor shall install temporary pavement. The Contractor shall take all reasonable measures to complete temporary pavement on the same day excavation work was begun. If same day paving is not achievable due to complexity of work, emergency, or unpreventable conditions, the Contractor must notify the WFD as soon as practicable that same day, if not sooner, and take appropriate measures to protect the public safety and infrastructure until work commences again the following day. The most stringent measures will be required on primary streets. Same day paving will typically be required if work is not expected to be continued the next day, regardless of location.
2. The Contractor shall notify the WFD 24 hours prior to beginning paving operations for inspection. All hot mixed asphalt paving must first be approved by the WFD as to depth and materials; this applies to both temporary and permanent paving activities.
    a. Notification of the anticipated timing of all paving activity must be acknowledged by the WFD. Any notification delivered by facsimile machine must be preceded or followed up by a telephone conversation to assure its proper and timely receipt.
    b. Contractors shall endeavor to make a follow-up notification by 9:00 a.m. of each workday that paving is still anticipated. In the event of schedule changes or emergencies, the Contractor shall provide a minimum of one-hour notification to assure inspection availability.
    c. If a WFD inspector is not able to be on site within 24 hours of the acknowledged anticipated start time of paving activity, the Contractor may be allowed to commence paving. Inspector may sample in-place material for specification compliance.
    d. Contractors who do not provide proper notification of paving activities may be subject to required removal and replacement of pavement for the purpose of inspection.
3. All temporary pavement shall be hot mixed asphalt, conforming to MassDOT Standard Section 460, placed in one and a half (1.5) inch compacted courses to a total depth of three (3) inches. If a layer of concrete, cobblestone, granite pavers, or other supporting material also exists, the Contractor shall install concrete to match that depth prior to installing temporary pavement.
4. If excavation (or pavement damage) occurs at or within twenty four (24) inches of the edge of trench, the Contractor shall place temporary pavement to the edge of existing sound pavement.

5. Hot mixed asphalt paving of trenches deemed by the WFD to be major excavation shall be paver applied, unless otherwise authorized by the WFD.
6. The Contractor shall maintain the temporary pavement and shall keep the temporary pavement in acceptable condition until the end of the guarantee period, or until permanent pavement is installed. At this time, the temporary pavement shall be excavated to the required grade in order to place the permanent bituminous concrete pavement.
7. The Contractor shall perform any necessary restoration beyond the limits of the street pavement, including lawns, esplanades, shrubs, gardens, curbing, sidewalks, underdrains, separations fabrics, fences, walls, etc. if they have been damaged during their construction work. Upon completion of the permanent repairs outside the limits of the street pavement, the Contractor shall notify the WFD in writing that the permanent repairs and/or replacements have been completed, setting forth the date of completion. The Contractor shall maintain the repaired area outside of the pavement for a period of one (1) year after completion, with the exception that once proper horticultural growth has been established, no further horticultural maintenance will be required.
8. Refilling of bar holes made in the street or sidewalk shall immediately, upon completion of the work, be filled with compacted, granular material up to three (3) inches below the paved surface and the remaining three (3) inches filled with an approved asphalt plug.
9. All traffic control signs (i.e. STOP, YIELD, DO NOT ENTER, ONE WAY, NO PARKING, SPEED LIMIT, CURVE WARNINGS, etc.) approved by the WFD via the Municipal Maintenance Department for removal, relocation, replacement, etc. shall be immediately replaced by the Contractor, unless otherwise directed by the WFD. No such traffic control sign shall be removed, relocated or replaced without the express approval of the WFD.
10. All traffic devices, signs, pavement markings or traffic loops disturbed, damaged, altered or removed by the Contractor shall be promptly replaced by the Contractor, unless otherwise directed by the WFD, in accordance with Town and State of Massachusetts rules and regulations at the expense of the Contractor. The Contractor shall promptly repair all other damage caused by the work or activities. Street markings (centerlines, crosswalks, stop bars, lane markings, etc.) and traffic loops shall be replaced no later than thirty (30) days after completion of work or as may be directed by the WFD. If work disturbs centerlines or lane markings on primary streets, the Contractor shall place temporary reflective markers immediately after the pavement is placed.

d) Permanent Pavement
1. The existing pavement shall be sawcut a minimum of six (6) inches beyond the initial excavation limits to expose a six (6) inch width of undisturbed soil.
2. The temporary pavement, backfill and undisturbed soil shall be removed to the depth of the proposed pavement and disposed of off the site.
3. The permanent pavement shall be:
    i. Binder coat shall be a minimum of three (3) inches in depth set in place as to accommodate a minimum of two (2) inches of finished topcoat. Finished asphalt shall be rolled to a flat uniform surface. The Wareham Municipal Maintenance Department shall issue a road cut permit which may include additional conditions or requirements.
    ii. Binder shall be founded on 4 inches of Dense Graded Crushed Stone on 8 inches of Processed Gravel or Dense Graded Crushed Stone. This pavement structure shall be placed on the backfill.
    iii. If pavement depth is greater than 5 inches, the Contractor will be required to match the existing pavement thickness. Increased depths of pavement may be considered on a case by case basis.
4. Trench backfill shall be checked for compliance with 95 percent compaction requirement. If compaction is found to be less than 95 percent, trench shall be re- compacted before paving will be allowed.

5. Permanent pavement restorations shall not be allowed to commence until at least one freeze/thaw season has passed since the installation of approved temporary hot-mixed asphalt pavement.
6. In cases where the existing pavement adjoining a proposed excavation is in need of rehabilitation, the WFD and Contractor may enter into a mutual agreement such that the Contractor undertakes the pavement rehabilitation as part of their pavement restoration.
7. Contractor will not be required to repair or replace damaged pavement existing prior to commencement of the work unless excavation operations result in small, unstable sections. These shall be removed and replaced as part of the work.
8. Each course of hot-mixed asphalt shall be compacted separately, meeting the requirement of 92 percent minimum compaction of standard laboratory theoretical maximum density for the specific material.
9. Mechanical compactors will be permitted for repairs less than 10 square yards. Repairs exceeding 10 square yards shall be rolled with an appropriately sized, power-driven, steel-wheeled roller to obtain specification density.
10. Hot-mixed asphalt materials shall be laid upon an approved clean, dry, compacted surface, spread and struck off to the established grade and elevation, giving regard to the loss in depth between loose and compacted mixtures. Immediately after the hot mix asphalt mixture has been spread, struck off, and surface irregularities adjusted, it shall be thoroughly and uniformly compacted.
11. All sawcut vertical faces of existing pavement shall be neat, free of loose materials, and tack coated with an approved asphalt emulsion by applying the emulsion material in conformance with MassDOT Standard Specifications Section 460.62, to fully cover the surfaces prior to pavement installation.
12. A tack coat shall be applied to the sub-base surface, or previous course surface.
13. If two or more excavations are made for the same utility or client in the same construction season and are within six (6) feet of each other, edge to edge, they shall be permanently restored as one trench, including the pavement between excavations.
    i. Same requirement shall apply, if in a future season, an excavation for the same utility or client occurs within six (6) feet and the first has not yet been permanently restored.
14. If an excavation for the same utility or client falls within six (6) feet of another excavation already permanently restored, the permanent pavement of the second excavation shall include all surface pavement between both excavations.

e) Material Specification
1. Granular gravel borrow and processed gravel material backfill shall conform to MassDOT Spec. M1.03.0, Gravel Borrow Type (b) and MassDOT Spec. 1.03.1, respectively or as amended.
2. Sand borrow shall conform to MassDOT Spec. 1.04.0 or as amended.
3. Controlled Density Fill (CDF) Type IE Excavatable shall conform to MassDOT Spec. 4.08.0.
4. Pavement structure subbase material shall be either MassDOT M1.03.1 Processed Gravel for Subbase or MassDOT M2.01.7 Dense Graded Crushed Stone for Subbase. The material shall be spread in layers not exceeding eight (8) inches in loose depth and compacted to no less than 95 percent of the maximum dry density of the material, ASTM D1557.
5. Temporary pavement shall be hot-mixed asphalt MassDOT Type I top course material conforming to MassDOT M3.01.0 and M3.11.07.
6. Steel Plates.
    i. Plates and supporting members shall be steel, either new or used.
        1. All materials shall be sound and free of damage or deterioration that would adversely affect functions.
        2. Load and deflection calculations shall be used on ASTM A36 / A36M steel unless Contractor provides evidence that all steel used for the plate systems will be a higher strength grade.

ii. Steel plates in vehicular and pedestrian traffic areas shall be coated with an approved skid-resistant coating. Preparation of the surface and application of the coating shall be in accordance with all of the manufacturer's guidelines. Coatings shall be maintained on 100 percent of the surface of plates carrying vehicular and pedestrian traffic. Repairs shall be made to worn or deficient areas.

7. Permanent pavement materials shall conform to the same MassDOT Standard Specifications as required for temporary pavement.
8. Portland Cement Concrete shall conform to the requirements of Section M4 of the MassDOT Standard Specifications.
9. Reinforcing shall be FIBERMESH fibers (100 percent virgin polypropylene, collated, fibrillated fibers) at a rate of 1.5 lbs. per cubic yard of concrete will be allowed for non-structural reinforcement. Installation shall be per manufacturer's recommendations.
10. Loam shall conform to MassDOT Standard Specification Section 1.05, Loam Borrow. Loam shall have a finished depth of six (6) inches (minimum).
11. Seeding shall conform to MassDOT Specification Section M6.03. Contractors shall be required to continually seed and water areas of loam until a satisfactory growth of grass is established.
12. Filter fabric for underdrain shall be equivalent to Mirafi 140 by Fiber Industries.

f) References

1. All materials and execution shall conform to the highest applicable standards. If there is a conflict between other standards and these Design standards, then the most stringent criteria shall be used.
2. These standards draw and refer to the Commonwealth of Massachusetts Massachusetts Highway Department: Standard Specifications for Highways and Bridges (1995 et seq.) and the Commonwealth of Massachusetts - Massachusetts Highway Department: Construction and Traffic Standard Details (1996 et seq.). These two documents are referred to collectively as the MassDOT Standards. The latest revision of each standard shall be referenced.

11.0 PRESSURE, CHLORINATING, AND BACTERIA TESTING

Municipal Lines

Leakage Test: All pipelines shall be tested for leakage before the installation of service taps. Methods of testing and plans showing sections to be tested shall be submitted to the WFD for approval as requested All pressure testing must be in conformance to a written plan submitted to, and approved by, the WFD.

No more than 2,000 feet of water main shall be tested in a single test. During this test all hydrant laterals shall be in the open position. The Contractor will not perform a pressure test against existing valves unless authorized by the WFD.

Contractors will retain the WFD to conduct acceptance tests as prescribed in the rate schedule utilizing the following procedure:

1. Pipes will be filled slowly with water through valves operated by the WFD.
2. Hydrostatic testing is performed as follows using the bump test (see Appendix A for descriptions and forms):
    a. Internal pressure of the pipeline shall be gradually increased to a steady reading of the WFD choice (typically 50, 100, and 150-psi gage) on three separate tests.
    b. After the initial 30 minute sit period, repump the line to 50 psig and measure the amount of the water pumped into the system.
    c. Repeat the same 30-minute sit & recovery at 100 psi and 150 psi and record the results.
    d. If the recovery volume at these increasing pressures, whether its ounces or gallons, stays the same or decreases, the pipeline is tight and is not leaking water but simply compressing a contained air bubble, which expands when the pumps cease.

e. Increasing recovery volumes at increasing pressures is a clear statement that trapped air is not affecting the pressure reading but a leaking valve, a leaking joint, a defective item, or some other issue that must be further diagnosed or repaired / replaced.
f. Any loss of pressure at this phase of the test requires the termination of the test until the leak is located and repaired.
g. All visible leaks shall be corrected regardless of the results above.

All pipelines must pass the hydrostatic pressure test before initial flushing and the introduction of chlorine for disinfection.

The Contractor shall submit a written report to the WFD summarizing the results. The Contractor shall repair all leaks discovered under any of the required tests and retest the pipe. The WFD will not accept any installation where a final test has not been passed.

Disinfection Test: Disinfection shall meet ANSI/AWWA C651 - Disinfecting Water Mains. A written Disinfection Plan shall be provided by the Contractor. The Disinfection Plan shall summarize the intended type of chlorine dosage and the method for establishing that dosage. The disinfection may be accomplished by introducing into all the various parts of the new water mains a liquid solution in such volume that the rate of dosage to the water mains shall be at least 25 parts per million of available chlorine. The Disinfection Plan shall document the locations and methods for applying the chlorine into the pipeline as well as methods for dechlorination. Connections at cuttings shall be swabbed with a 50-PPM solution of chlorine at locations when other methods are not applicable. The Contractor shall not proceed with the disinfection procedures until the Disinfection Plan has been approved by the WFD. No more than 1,000 feet of water main shall be disinfected in a single test.

The WFD preference is for chlorine in the form of liquid or tablet (either sodium hypochlorite or calcium hypochlorite) applied at a minimum dosage of 25 parts per million. If gaseous chlorine is to be used, then a hazard mitigation plan and coordination with the fire department will be required. The WFD reserves the right to reject disinfection plans with gaseous chlorine if the WFD deems the hazard to the public to be too great. The pipeline shall remain chlorinated for at least 24 hours and maintain at least 80% of the starting residual at the end of the test.

All chlorinated water shall be de-chlorinated using a neutralizing agent to meet all State and Federal Standards (generally <0.02 ppm). Dechlorination shall take place at the point of discharge in a manner approved by the WFD. Tables are provided in AWWA C651 to guide the contractor in chemical dosing and removal.

All water used in de-chlorination process shall be charged at the base rate for 2,000 cubic feet per flushing event. If more volume then 2,000 cubic feet of water is used, then the current tier rate for that volume of water used above the base will be charged.

After each chlorine treatment the WFD will assist the contractor with dechlorination of the pipeline by operating the distribution valves. Dechlorination will continue until no measurable residual is detected.

Bacterial samples shall be collected both at 24 hours and 48 hours after the line is dechlorinated and delivered for analysis by the WFD by a State certified laboratory. Samples shall be obtained at the approved sampling sections of the main. New water mains will be required to be sampled for both bacteria and heterotrophic plate count (HPC) analysis.

The contractor is permitted to "split" the sample for independent analysis if desired. If any pipeline sample tests positive for bacteria, the entire site shall require additional chlorine disinfection. Flushing is not an acceptable means of removing bacteria from a pipeline. All costs associated with flushing, chlorinating, de-chlorinating and sampling shall be paid for by the contractor/owner. Water used for flushing shall be charged at the base rate for 2,000 cubic feet per flushing. If more volume then 2,000 cubic feet of water is used, then the current tier rate for that volume of water used above the base will be charged.

Fire Service Lines

Fire services lines will be disinfected in the same manner as municipal lines. Hydrostatic pressure tests for fire service lines shall be 100, 150, and 200 psig with no loss over 30 minutes using method described above). A test certificate for underground piping shall be provided to the Wareham Fire Department by the owner/tester.

12.0 METER SET-UP

The property owner shall pay for meters in accordance with the rate schedule at the time of service application. All meters shall be supplied and installed by the WFD. All meters shall be the sole property of the WFD and register in cubic feet. All services shall be fitted with a 5/8-inch meter. Requests for larger meters will be considered if documented by a fixture analysis per AWWA M-22 and/or State Statutes and Regulations. All meter set-ups shall include a quarter turn ball valve before and after the meter, meter couplings, meter, suitable backflow device, and a pressure-reducing valve if required. All fixtures, fittings, couplings, and piping from and including the curbstop connecting fitting (except the meter) shall be owned and maintained by the property owner. Meters shall be owned and maintained by the WFD. The property owner must keep meter on his/her premises easily accessible for reading and servicing at all times. The Water Department reserves the right to read, inspect or service the meter at any time (M.G.L. 165, paragraph 11D).

13.0 METERS REQUIRED

Meters shall be required to any building or parcel which takes water from the WFD for any use. All single family residential properties shall meter individually with a 5/8th inch meter. Managed residential multi-unit rental properties (i.e. duplex, apartments, and multi-family) shall have each building metered as one. Multi-unit non-managed, non-rental residential properties (i.e. condominiums, townhouses, dual owner duplex units) shall be metered individually. Commercial properties, other than manufactured housing, shall have individual meters for each building served with water for any use other than fire protection.

WFD owns to the service curb stop as well as the water meter itself. All other service material (e.g. isolation valves etc.) is owned by the property owner.

WFD retains the right to replace the water meter on a periodic basis (typically every 10-15 years), when the meter fails, or operating improperly. WFD retains the right to turn off the water service if reasonable access is not provided to read or service the meter.

Lateral connections which exist prior to the adoption of these rules shall pay an “in lieu of meter” lateral connection fees as defined in the rate table.

14.0 METER PITS

The policy of the WFD is to discourage the use of meter pits. However where deemed necessary by the District, meter pits will be paid for, owned, installed and maintained by the property owner. Meter pits will only be required if, in the opinion of the WFD, it is in the best interest of the WFD (i.e. high ground water tables, excessive service length, lateral connections, seasonal services, no suitable inside meter location). All meter pits shall require the installation of a dual spring-check valve and ball valve.

Meter pits shall be required when the service line is greater than 200 feet. In these cases, the meter pit shall be installed as close to the start of the service line as possible. In cases where a meter pit/vault (or backflow prevention pit/vault) is considered by OSHA regulations to be confined space, the owner will provide a positive air flow system (e.g. fan) meeting OSHA requirements to allow entry as a remediated confined space entry. Owner will be responsible to maintaining the system in working order.

15.0 MANUFACTURED HOUSING - UNIT CHARGE and MASTER METERS

Manufactured housing parks shall be billed the minimum fee per billing for the total number of permitted units. The minimum fee shall be calculated as the minimum allowance per cubic feet (currently 2,000 cf) multiplied by the number of permitted units. The following also apply for manufactured housing parks:

1. Manufactured housing parks shall be master metered solely for paying any usage overage.
2. Usage overage will be charged at the current tier water rates.
3. Manufactured housing parks shall not be subject to lateral connection fees but are subject to fire protection or other readiness to serve fees.
4. No credit will be provided for vacancies.
5. It should be noted that the WFD no longer provides service repair work on private water lines.

16.0 SERVICE INACTIVATION

All water accounts shall remain active for the payment of the "curb-stop" fee until such time the service is disconnected from the water main at the corporation. All costs associated with the removal of a service shall be the responsibility of the property owner.

17.0 BACKFLOW DEVICES

A backflow device shall protect all water services installed. A Watts #7 dual check valve shall protect residential services. A pressure vacuum breaker, reduced pressure zone device, or a testable double check valve shall independently protect irrigation systems. A device as specified by the WFD consistent with the hazard potential shall protect commercial and industrial services.

A testable double check valve or reduced pressure zone device shall protect fire systems as specified by the WFD. All water services requesting a change-in-use/ownership, building or other permits shall be retrofitted with a suitable backflow device as directed by the Superintendent prior to the WFD sign-off of the permit.

All installed testable backflow devices shall be tested by a WFD certified tester on an annual or semi-annual basis. In cases where the backflow is located in a pit/vault, and the location is considered by OSHA regulations to be confined space, the owner will provide a positive air flow system (e.g. fan) meeting OSHA requirements to allow entry as a remediated confined space entry. Owner will be responsible to maintaining the system in working order.

18.0 WATER SERVICE CONFLICTS WITH SEPTIC OR SEWER

Water mains and services should have a lateral separation of ten (10) feet. Should local conditions prevent a lateral separation of ten feet, a sewer may be laid closer than ten feet from a water main if:

- Approved by DPW in writing.
- The elevation of the top (crown) of the sewer will be at least 18 inches lower than the bottom (invert) of the water main. If the WFD has information or believes that the groundwater is elevated in the area of the sewer and water pipe such that a possible cross contamination could exist, the WFD reserves the right to have the water main sleeved or concrete encased.

Water services that fall within the minimum ten (10) foot setback from septic systems or the minimum ten (10) foot sewer setback that do not fall in the above categories must be sleeved or encased in concrete using the following guidelines:

1. Sleeve shall be at least twice the diameter of the water service pipe.
2. Sleeve shall be either SDR35 pipe with push on joints, or a continuous length of 200-psi HDPE tubing.
3. Any portion of the service installed within the ten foot separation limit shall be sleeved to a point at least five feet beyond the setback limit.
4. The sleeve shall extend through the building foundation to the curb stop if the above requirement cannot meet.
5. Sleeve shall be sealed at either end using an expanding foam type insulation sealant.

6. A backflow device on the service is required. In certain applications (i.e. high groundwater), the WFD may require the installation of a meter/backflow pit.
7. The installation must be inspected by the WFD before backfilling. One-day prior notice is required.

19.0 FIRE SERVICE

Fire services shall enter the building separate from the domestic service. Water taps that support both fire and potable water services shall be independently gated immediately outside the building so that neither gate operation will affect the other in use. The following apply to Fire Services:

1. The WFD does not require meters on fire services. All fire services shall pay an annual fee as described in the WFD fee schedule.
2. An approved fire service backflow device shall protect all fire service lines immediately after the point of entry to the structure.
3. Fire services that include an additive for corrosion or freeze protection shall require a reduced pressure backflow device.
4. An annual readiness to serve fee shall apply to all private fire sprinkler systems and private hydrants as prescribed in the fee schedule. This fee shall only provide for the availability of water at the shutoff valve and does not extend to repairs, replacement, painting, landscaping or maintenance associated with the fire protection system or hydrant. Nor does the fee grant to the taker any guarantees or warranties either specific or implied as to the adequacy or lack thereof of pressure, flow rate, and quantity of water available. The fee is billed once a year and is not pro-rated for the year.

HYDRANT PLACEMENT

The placement of fire hydrants within residential developments constructed shall be no more than 500 feet apart. The spacing of fire hydrants in commercial and industrial developments or at sites proposing a specific fire hazard shall be at the discretion of the Fire Chief or their designee, with high hazard areas requiring no more than 300 foot spacing.

For all new water/fire service mains a fire hydrant shall be placed at the point where the water/fire service line either terminates or is at the maximum distance from an existing hydrant. The spacing of hydrants shall be determined beginning from the hydrant placement as prescribed in the preceding sentence. Cul-de-sacs hydrants may be installed “in-line” eliminating the need for the hydrant tee and blow off assembly.

PRIVATE HYDRANTS

Private hydrants will be assessed an annual readiness to serve fee. Inclusive of that fee shall be a requirement for the WFD to periodically flush, check for drainage, operability, and paint and lube the hydrant, and make repairs to the hydrant equal to the value of the annual fee. The cost of repairs in excess of the value of the annual fee shall be paid by the owner. No water may be taken from any hydrant for purposes by any individual not approved to do so by the WFD.

20.0 IRRIGATION SERVICES

Water used for irrigation shall be an independent tap off the domestic service downstream of the meter. No independent meter for irrigation is required. A suitable backflow device as described in the state plumbing code shall independently protect all irrigation systems. Installation of irrigation requires a plumbing permit.

21.0 NON-PAYMENT SHUT OFF POLICY

All water bills are due and payable within thirty days. Water bills in arrears greater than thirty days are subject to a past due notice and interest charges as prescribed in the rate schedule. The following actions will be taken after the past due notice is provided:

1. If the bill is still outstanding after that notice’s due date, a shut-off notice is sent.

2. If the bill is still outstanding 60 days after the original invoice and no contact is made to arrange for a payment plan, a letter of termination of water service is sent certified mail.
3. If payment is not received as previously described, service may be terminated on the first day after receipt of the certified mail return card or after fourteen days, whichever occurs first.
4. On the day the service is to be terminated, Water Department staff will attempt to provide verbal notice to any occupant of the premises (or a door tag will be left) that service is to be terminated.
5. A service charge as defined in the rate schedule shall be assessed for collection of payments made at the time of termination.

Any customer, prior to the termination of service, may agree to a written payment plan with the WFD. Any customer requesting a payment plan to avoid shut-off shall be afforded the opportunity to participate in a payment plan provided the account is not in default of a current payment plan.

22.0 PAYMENT PLAN POLICY

Notice of Termination for Nonpayment

When the WFD does not receive payment for bill, the WFD will provide a Notice of Termination. If no payment plan is established and the account reaches the termination level, but the water is not physically turned off, the customer must pay one-half of the termination amount due immediately to avoid termination. The remaining balance must be paid WITHIN two weeks of the first payment. If full payment not received within two weeks, the water will be turned off without further notice.

Restoration of water service to properties whose service is terminated for non-payment or default of a payment plan requires payment in full of all charges due the WFD on the date of termination and any other associated fees as outline here within.

Six Month Payment Plan

The WFD encourages customers to pay their water bills in full at the time they are due. However, in the event a customer is not able to pay the water bill in full, the WFD will allow the customer to pay the bill in installments of 1/6 the total bill plus finance charges for six months. Full payment can be made at any time during this period. If the bill is not paid in full by the end of the 6-month period, the account will move into termination phase.

The first payment shall be due on the first or fifteenth of the month (customer choice) following the execution of the re-payment plan agreement. If the business day is a Saturday, Sunday or a recognized national or state holiday, then the payment will be due on the next business day thereafter. Any customer who fails to comply with the terms of their re-payment agreement with the WFD including the terms and conditions set forth in the preceding paragraph shall be considered in default and shall have their service terminated without the benefit of additional notice.

Any customer who is a party to a re-payment agreement with the WFD, who notifies the WFD in no less than five (5) calendar days in advance of the next payment due, of their inability to make such scheduled payment, shall not be considered in default for that payment, provided that payment is made in full prior to the next monthly payment date and the next month's payment is made in full. Customers who do not meet this requirement are considered in default and will have their service terminated without the benefit of additional notice.

The first payment shall be due on the first or fifteenth of the month (customer choice) following the execution of the re-payment plan agreement. If the business day is a Saturday, Sunday or a recognized national or state holiday then the payment will be due of the next business day thereafter. Any customer who fails to comply with the terms of their re-payment agreement with the WFD including the terms and conditions set forth in the preceding paragraph shall be considered in default and shall have their service terminated without the benefit of additional notice.

Breach of Repayment or Termination Bill

A breach of the repayment agreement either from the six-month payment plan or the default payment plan, or a bill associated with termination will allow the WFD: (i) exercise all legal rights and remedies available to the WFD and/or (ii) to cause a lien to be committed upon the property for collection that will incur statutory interest until paid in full.

Commitment of Liens
All accounts that are equal to or greater than 9-Months late in payment, or are in default of a six-month payment plan, SHALL be subject to cause a lien to be committed upon the property.

Hardship
In cases where hardship can be demonstrated to the Board of Water Commissioners (e.g. hardship relief granted by the electric utility), the Board of Water Commissioners at their discretion, can modify the terms of repayment.

23.0 FINAL READINGS FOR PROPERTY TRANSFER

The WFD requires final meter reads for all property transfers. Failure of a prospective owner to obtain from an existing owner verification of a final reading and billing shall not be deemed as a means of relief from any charges due the water department prior to assuming ownership. A service charge for this service as defined in the rate schedule shall be charged to the account.

24.0 RETURN CHECK POLICY

Checks payable to the WFD for the purchase of water, materials, labor, fees, and/or services to any account to which the WFD is entitled payment shall be subject to the provisions of MGL c. 266 § 37. The return of any instrument from the institution on which it is drawn, shall require a cash payment of the debt in full, including any additional fees associated with the return of the instrument to avoid or reverse termination of service. Upon receipt of a returned instrument of payment, the WFD shall return said instrument to the drawer by certified mail. Included with the returned instrument of payment shall be a service termination notice. Service may be terminated on the first day after receipt of the certified mail return card or after fourteen days, whichever occurs first. A service fee as described in the rate schedule, and the cost associated with the certified mail, shall be applied to the account for each occurrence an instrument of payment is returned.

25.0 CUSTOMER REQUESTS FOR METER TESTING OR REPLACEMENT

Customers may request that their water meter be tested. The request shall be in writing and state the reason for the test. If a customer believes a meter is over registering consumption, the period to which the over registering claim is made must be stated in the correspondence requesting the test. Failure to specify the period to which the claim is made, shall limit the claim to the last consumption billing period.

Meters found to be operating within two percent of the manufacture's specifications for accuracy shall be deemed accurate. If a meter tests either above or below the accuracy parameters by greater than two (2) percent an adjustment to the bill will be made for the period stated in the request for the meter test.

The WFD for a fee as described in the rate schedule shall test all meters. However, a customer may request that an independent testing company test the meter provided the customer pay for the independent test plus the service fee. A chain of custody shall accompany all meters to be tested.

Any customer requesting a replacement meter in lieu of testing may have a new meter of equal size for the cost of the new meter. A service fee as described in the rate schedule shall be assessed for the installation of the new meter. Meters replaced at the customer's request under this section, will not constitute a basis for an adjustment to charges.

26.0 STANDARD METER REPLACEMENT SCHEDULE

All water meters older than ten (10) years may be replaced at the discretion of the WFD. Costs associated with the replacement of meters shall be as prescribed. All 5/8 meters shall be replaced without cost to the

customer. It is the policy of the WFD to reduce meter sizes whenever possible. If a meter is to be reduced in size, the WFD will supply and install the necessary fittings.

The standard meter for most residential and commercial use is 5/8-inch. Customers wishing to keep or install larger meters, may at their own expense, provide the Superintendent a fixture analysis prepared by a qualified professional engineer in accordance with AWWA M22 Standards. Based on the findings contained in the fixture analysis the Superintendent may provide a larger meter.

If, after notification by certified mail and/or door hanger a water taker refuses entry to read, inspect, repair, replace and/or install a meter the District may (1) terminate service, or (2) assess a five hundred ($530.00) annual service fee in addition to any water usage or other charges incurred by the taker.

27.0 UTILITY MARK OUTS

The WFD is neither required to be, nor is a member of Dig Safe. As such, any rules pertaining to the accuracy of marking utilities as prescribed by that organization do not apply to the Wareham Fire District. This rule is considered by the WFD to be notice to all persons doing any excavations that all water main and service utility markings provided by the WFD shall be considered a directive to the excavator to use all means of due diligence, to include hand digging, to positively locate all water services and mains when excavating. Any damages done to any water main or service because of an excavation other than by hand digging shall be recoverable by the WFD.

The owner or owner's representative shall be required to sign a Water Service Location Survey Waiver / Indemnity Release in which the Owner who receives this service fully understands that the WFD does not own complete surveyed record drawings delineating the precise location of water service lines and other underground lines and structures. As such, the actual location of the water service and other underground lines and structures is unknown. Nevertheless, as a courtesy to the community, the WFD has agreed to use common non-destructive techniques in an attempt to locate and mark out the location of the water service line.

28.0 SEASONAL DEMAND MANAGEMENT & SERVICE LINE LEAKS

<u>Seasonal Demand Management Policy</u>

The purpose of this section of these rules is to provide a means for conserving the water supply during the peak summer demand months and on those occasions of anticipated or actual shortages and when deemed necessary for the health or welfare of the WFD's customers. At a minimum, the WFD shall enforce demand management policies during the period of May 1st to September 30th on an annual basis. This timeframe may be modified and/or extended based on the drought status determined by the State of Massachusetts.

1. The duration of these mandatory restrictions for lawn and landscaping watering using sprinklers shall be for the period between May 1st and September 30th of each and every year. Irrigation of lawns, gardens, and landscaping by a sprinkler, be it either installed or by a hose, is limited to properties corresponding to the day of the month and said properties legal address as follows (e.g. ODD/EVEN authorized watering):
    a. Address ending in an even number or any fraction of a number or a letter may irrigate on even number calendar days from May 1st and September 30th on an annual basis.
    b. Address ending in an odd number may irrigate on odd number calendar days from May 1st and September 30th on an annual basis.

2. Owners of newly seeded or sod lawns may apply to the Superintendent for a twenty (20) day exclusion from this rule. A Notice of Exclusion shall be provided by the District. A service fee shall be charged for preparation of the Notice of Exclusion. Exclusions are not transferable, and the notice shall be displayed in a window of the property so as to be visible from the street. The twenty day exclusion shall be for a period not to exceed twenty consecutive calendar days. During drought periods as defined by the State, the WFD may elect not to issue these permits.

3. Enforcement: The BoWC through their designated representatives shall enforce the provisions of this rule. The BoWC shall for each and every violation of this section provide written notice of violation. Said notice shall be issued at the time the violation is observed by the BoWC or their designated representatives. Said notice of violation shall be given to an occupant of the property if one is present or left at the premises if no occupant is present to receive the notice. Said notice shall require the immediate termination of the violation. Advisory notices may be sent to properties reported to the WFD as being in violation of this section. An advisory notice shall not be counted as a violation for the assessment of a service fee.

4. Violations: Written notice of violation as described in the presiding paragraph for the first offense, and thereafter and subsequent violations as prescribed in the rate schedule.

5. The provisions of this section do not apply to watering of lawns, gardens and landscape, or any other water use by a hose held in the hand. Nor shall the provisions of this rule be enforced on the 31st day of any month except as provided for in paragraph (6). Nor shall these rules apply to any customer who uses a separate water supply such as a well or surface water for irrigation.

6. The BoWC, at their discretion, may impose temporary water use restrictions more stringent than those provided for in this section. Said temporary restrictions shall be imposed as the result of a declared water emergency and shall supersede any seasonal water demand measures in place at the time. A water emergency may be declared by the BoWC at any time during drought alerts or advisories issued by the State, or due to circumstances or conditions of a well, storage tower or the distribution system which warrant such a declaration. At a minimum, a declared water emergency shall prohibit the irrigation of lawns, gardens, and landscaping by a sprinkler, be it installed or by hose. Other water restrictive use measures may be imposed by the BoWC at any time during a declared water emergency if conditions warrant additional restrictions. A water emergency once declared by the BoWC shall remain in effect for no less than five days and until further notice is provided.

7. The provisions of this section shall not apply to independent sources of water used for lawn irrigation such as private wells, streams, or ponds.

Service Line Leaks

Notice of leaks on the service line owned by the homeowner shall be repaired by a WFD approved contractor within thirty (30) calendar days of receiving written notice by the WFD, or approved alternative timeline by the WFD in writing. Service lines which are not repaired in the timeline provided will be provided with a warning of shutoff. If no action occurs after seven (7) calendar days of receiving the shut off warning, the water will be turned off until such time the service line is repaired and inspected by the WFD.

29.0 RESIDENTIAL WATER SERVICE APPLICATION RULES

WATER SERVICE APPLICATION PROCEDURE **–** The property owner or their representative shall complete a Water Service Application Card at the Water Department. Applications should be submitted at least ten (10) days before the installation of the service. The system development fee shall be paid at the time the application is made. Building permit signoffs require completion of a Water Service Application Card. (Note: Filing the application activates the account for billing.) No water service will be permitted to any building connected to a well. Buildings on properties with wells may be serviced provided there is no physical connection between the well and the interior plumbing.

PLANS FOR RESIDENTIAL SERVICES – A simple plot plan is required for new installations. The plan shall show the proposed location of the water service in relation to the roadway and the dwelling. The plan does not have to be prepared by an engineer, unless the lot is to have a septic system. The location of the service may be altered in the field with the concurrence of the Superintendent or his designee. A detail plan may be required for installations greater than 150 feet in length, that cross wet or wooded lots, are within ten

(10) feet of a septic system, require a meter pit, or some other condition exists where a plan would benefit the water department. Services installed under slab foundations shall be sleeved.

***SCHEDULING SERVICE TAP* -** For new curb stops, the owner/contractor shall schedule the tap with the WFD. A plot plan is required. Owner is responsible for road cut, trenching, backfill, road repair, safety, and traffic control within the right-of-way. Meter pits may be required depending on site conditions. Owner shall obtain a Dig Safe number and all permits for State roads. The WFD will obtain excavation permits on behalf of the applicant for work with Town's right-of-way. Applicants should consult the WFD for a cost estimate for the tap work.

***SCHEDULING SERVICE LINE INSPECTION FROM CURB STOP TO FOUNDATION* -** Inspections must be done before backfilling the trench. No inspections will be performed on service lines not connected to an active curb stop. A ball valve and trace wire must be installed on the service line inside the foundation for the inspection. Service lines installed within a slab foundation shall be sleeved. Owner shall be responsible for all costs associated with installing the service line from curb stop to meter. Inspection on previously backfilled or dry installed lines requires a pressure test. Inspections shall be scheduled before 2:00 p.m. on the workday before the actual installation. There is no charge for scheduled inspections. Requests for same day inspections require a $70.00 service fee.

***WATER SERVICE MATERIALS* -** All residential water taps shall be one (1) inch. Service tubing shall be sized per AWWA M-22. All backfill shall be suitable material free of debris and stones greater than 4-inch in size. All connections shall be compression type fittings with stainless steel inserts; flared fittings are not permitted. All material must be installed as to have no leakage under pressure. All water service tubing shall be Copper Tube Size (CTS) 200 psi Polyethylene (HDPE) tubing conforming to AWWA C-901. Tracing wire on plastic tubing is required.

All curb boxes shall be North American made "Buffalo" Style 2½-inch to include cover, slide top, and base. The curb box shall measure in length from the curb stop to the finished grade plus six (6) inches. All curb stops shall be centered and plumbed in the box at a depth of between four and six feet below *final* grade. The owner is responsible for the final placement of the curb box.

***SCHEDULING METER INSTALLATION* -** The residential meter setup, spacer bar, and backflow device must be installed before the meter can be set. Water meters shall be installed and water turned on only by water department personnel. Meter appointments shall be scheduled before 2:00 p.m. on the workday before the actual installation. Plumbers/owners may pick-up a spacer from the WFD. There is no charge for scheduled appointments. Requests for same day installations require a $70.00 service fee.

All meters shall be supplied, installed, and owned by the WFD. All services shall be fitted with a 5/8-inch meter. The meter set-up shall include a quarter-turn ball valve before and after the meter, meter couplings, meter, suitable backflow device, and a pressure-reducing valve if required. All fixtures, fittings, couplings, and piping from and including the curbstop connecting fitting (except the meter) shall be owned and maintained by the property owner. A Watts #7 style backflow device shall protect all services. **Please consult the local plumbing inspector for applicable codes.**

SCHEDULING OCCUPANCY PERMIT INSPECTION – Final inspections for occupancy permits shall be scheduled with the water department. Sign-off inspections must be scheduled before 2:00 p.m. on the workday before the sign-off is needed. It is strongly recommended that the sign-off inspections be requested 3-5 days prior to the need of the permit so that any noted deficiencies can be corrected. There is no charge for scheduled appointments. Requests for same day sign-offs require a $70.00 service fee. All noted deficiencies must be corrected prior to the sign-off of the permit.

30.0 PLUMBING FAILURE – ABATEMENT POLICY

Abatements shall be given at the discretion of the Board of Water Commissioner's based on the following criteria:

1. A written request submitted in a timely manner.

2. An abatement will not be provided if an insurance company has or can cover the bill.

3. The water leak must be repaired. Evidence that the repair has been fixed must be provided.

4. One abatement will be provided per property owner for the period of ownership of the house. The owner will be determined by the name on which the water service is assigned to in the billing software. If the owner changes, another abatement will not be allowed for a period of 10 years after the date of the previous abatement.

5. Calculate the abatement as follows:

    a. Deduct the allowance from the total consumption so that only excess consumption is left. The allowance in FY19 is 2,000 cubic feet.

    b. Determine the normal consumption by averaging the most recent four summer periods or four winter periods that match the period of the requested abatement. If no use is used during one of the seasonal periods (e.g. foreclosure, seasonal, etc.), the most recent season of use average will be utilized.

    c. Subtract the overage from the average overage consumption over the allowance for the period. This will be considered the excess water associated with the leak.

    d. Abate 50% of the excess water at the highest tier rate at which the water was billed.

6. This policy can be changed or revoked by the Board of Water Commissioners by an affirmative vote.

31.0 WATER METER TAMPERING POLICY

Meters will be supplied by the Water Department. All existing and supplied Water Meters are the property of the Water Department.

Any person employed by the Wareham Fire District, at the direction of the Water Superintendent, may at any time enter any premises supplied with municipal water for the purpose of examining or removing meters, pipes, fittings and works for supplying or regulating the supply of water and of ascertaining the quantity of water consumed or supplied in accordance with the Massachusetts General Laws and Board policies and regulations. (M.G.L. c. 165 § 11 et seq)

The Department reserves the right to remove, repair or replace any meter at any time as it deems necessary in its sole and absolute discretion. Meters shall be repaired and replaced from time to time as deemed necessary in order to ensure their accuracy in recording water usage at any facility serviced with municipal water.

If a meter fails to register or under-registers outside the manufacturer acceptable accuracy range for any cause other than tampering, the charge for the water shall be based on the average amount registered by the meter when in order for similar billing periods, using available billing records over the previous 5 years. Charges will be calculated covering the probable use period over which the meter was not registering correctly. Charges shall constitute water usage and as such, if not paid when billed, shall be committed as a lien to the Town Treasurer/Collector for real estate tax purposes consistent with applicable law.

All repairs or injuries to meters from freezing, hot water, or external causes shall be charged to the consumer.

No person shall change, or tamper in any way, with the water meter, including appurtenances. All settings and repairs will be made by the Water Department personnel. Tampering with a meter, such that said meter does not record the true and accurate water usage at a facility serviced with municipal water, will result in a $1,000 fine.

Should there be evidence of tampering which has resulted in reduced water bills, the Department shall calculate a charge based on the two highest uses for the winter and summer billing periods over the past 10 years, or available records, and adjust the bills to these usage amounts for the period of probable reduced water bills. The Water Department shall bill the amount so calculated as water usage, the non-payment of which when due and payable, shall be committed as a lien to the Town Treasurer/Collector for real estate tax purposes consistent with applicable law. In addition, the user will be charged for staff time and/or legal time spent to address the matter, the cost of a replacement meter if required, as well as a fine of $200 per billing cycle where meter tampering led to a reduced bill. Massachusetts law allows additional penalties for tampering with a water meter, including up to one year in prison, which the Board may pursue at its discretion.

32.0 SCHEDULE OF RATES, FEES & CHARGES

A. *DEFINITIONS*

BETTERMENT DEVELOPMENT FEE: Any lot having frontage on a public or private way that was part of a previous betterment project, annexation, or area of special assessment of the WFD that had not been previously assessed a betterment in that project will pay an amount equal to the per unit betterment charge assessed for that project and any cost to bring water service to that location. This betterment/assessment also applies to lots which may obtain an easement to water mains that were part of a bettered project area.

1. No amortization will be applied except for out of District properties.

WATER MAIN EXTENSION FEE: Water main extensions constructed by the WFD, which are tapped off of or otherwise extended from an existing water main, that was not installed under a betterment project and are intended to serve one or more properties will be assessed a water main extension fee.

The amount derived from the water main extension project undertaken by the WFD divided by the whole number of residential units then eligible to be connected to that individual project as determined in accordance with the provisions of G.L. c. 40 §§ 42 (G) – 42 (K).

1. All connection development fees shall be paid at the time of application in full to the WFD and are not refundable.

2. All work must be constructed completely by WFD approved contractors duly licensed and authorized to do such work at the applicant's sole cost and expense.

B. *WATER SYSTEM BETTERMENT OR EXTENSION FEE*

Residential:

1. **Existing Housing Units:** Any existing housing unit not previously serviced by municipal water having access to municipal water shall pay a connection development fee as set forth in Table No. 5 – New Service Development and Meter Charge, plus a water system development fee per unit of either the ***Betterment Development Fee*** per unit or ***Water Main Extension Fee*** per unit whichever is greater as those terms are hereinafter defined.

2. **New Residential Construction Units**: Newly constructed residential units with access to municipal water shall pay a connection development fee as set forth as set forth in Table No. 5 – New Service Development and Meter Charge plus a water system development fee per unit constructed of either the ***Betterment Development Fee*** per unit or ***Water Main Extension Fee*** per unit, whichever is greater as those terms are hereinafter defined.

Non-Residential:

Shall pay a connection development fee as set forth in Table No. 5 – New Service Development and Meter Charge plus a water system development fee per unit of either the ***Betterment Development Fee*** per unit or ***Water Main Extension Fee*** per unit whichever is greater as those terms are hereinafter defined.

In all cases, fees shall be paid in full at the time of application.

C. *CHARGES APPLIED BY THE WAREHAM FIRE DISTRICT*

The following tables are a listing of the rates, fees and charges applied by the WFD.

Table 1: Billing Rates

FISCAL YEAR BEGINNING 1 JULY	2021	2022	2023	2024
Water Consumption Bin	**$ Flat Fee**			
BASE RATE MINIMUM <2,000 CUBIC FEET	$ 120.00	$120.00	$120.00	$125.00
	$/Hundred Cubic Feet (HCF)			
OVER 2,000 TO 4,000 CUBIC FEET	$ 0.85	$ 0.85	$0.85	$0.85
4,001 to 10,000 CUBIC FEET	$ 3.40	$ 3.40	$3.40	$3.40
10,001 CUBIC FEET	$ 3.85	$ 3.85	$3.85	$3.85

Table 2: Capital Improvement Project (CIP) and Water Quality Management Fees

	$/ Hundred Cubic Feet (HCF)				
FISCAL YEAR BEGINNING 1 JULY	**2020**	**2021**	**2022**	**2023**	**2024**
CIP WATER TOWER/MIXER	$0.1915	$0.1542	$0.1497	$0.1389	$0.1337
CIP WATER MAIN REPLACEMENT	$0.3217	$0.3122	$0.3026	$0.2801	$0.2537
WATER TREATMENT PLANT	$0.9896	$1.2459	$1.5247	$1.5058	$1.4886
CIP MAPLE PARK WELL	$0.5049	$0.4942	$0.4833	$0.4521	$0.4309
GROUND WATER PROTECTION LAND	$0.2001	$0.1994	$0.1181	$0.1107	$0.1047

Notes: Non-Metered CIP/WQMF Minimum: 2,000 cubic feet per rate schedule

Table 3: Miscellaneous Fees

Item	**Cost**
Non-Metered Active Lateral Service Fee	$20.00 per building
Hydrant Water Rentals	Hydrant Meter Rental, or 5/8 Meter/Backflow Device Rental of $20.00 per week plus; minimum for the first 100 cubic feet, plus; overage per 100 cubic feet additional.
Frozen or damaged meter replacement	List price of meter plus service call charges as required.
Certified Mail Notice	Mailing cost plus $2.10 administrative surcharge.
Interest	Fourteen percent (14%) semi-annually, compounded on outstanding balances thirty days past due.
Return Check Processing Fee	$30.00 plus postage and mailing administrative surcharge
Site Plan Review	
Single Residential Connection	No Charge
Up to Three Connections	$105.00
Up to Ten Connections	$210.00
Greater Than Ten Connections	$320.00
Commercial Site Plan Review	$380.00
Inspectional Services	

Item	Cost
New Residential Scheduled Service Line Inspections	Included in the system development fee.
New Residential Same Day or Unscheduled Service Line Inspections	$70.00
Commercial Development Inspection Services	Three percent (3%) of improvement or hourly on-site rate.
Outside Water Sales	
Water considered an outside water sale shall be charged the following:	
1. Administrative Labor Fee	
2. A flat fee for the first HCF of water	
3. Water after the first HCF will be billed at the tiered rates in Table 1	
Fire Protection Charges	
The Prudential Committee shall pay a fee equal to eleven (11%) of the total Water Department budget adopted at the annual District Meeting for each fiscal year**.**	

Table 4: Service Call Fees

Service Calls **During Non-Holiday Regular Business Hours.**	**Cost**
Scheduled Service Call (all categories except meter testing)	$45.00 each
Meter Bench Testing	$80.00 each
Out of Office Collection to avoid service termination	$45.00
Non-scheduled Service Calls	$70.00 each
Seasonal meter removal and install	$55.00 each
Service line locating main to curb box	No Charge
Service Calls – Other Than Regular Business Hours	
All after hour, weekend, holiday emergency service calls	$185.00 each
New Service Installation	
WFD shall make all taps for one and two-inch services. Tapping costs shall be job specific based on current material, labor and equipment charges. NOTE: Tapping charge pays only for the material and labor for the water main tap to curbstop. No excavation, road repair, permits, or a police detail is included. The Superintendent or designee will provide an estimate for taps on request.	
Water Conservation Fines [1]	
Sprinkler Non-Compliance 1st Notice	Written Warning Notice
Sprinkler Non-Compliance 2d Notice	$20.00 each
Sprinkler Non-Compliance 3d Notice	$40.00 each
Sprinkler Non-Compliance 4th and Subsequent Notices	$55.00 each
Sprinkler 20-Day Exclusion Notice	$25.00 each
Miscellaneous Service Charges	
Turn off or un-authorized turn on	$240.00 each
Backflow Inspections/Testing	$75.00 each
Fire Flow Test Technical Support	$175.00 each

Notes

1. The State Executive Office of Energy and Environmental Affairs has four levels of Drought: Advisory, Watch, Warning, and Emergency. During Emergency status, the Water Conservation Fines will double the values shown in Table 4 and no 20-day exclusion notice shall be provided. WFD reserves the right to turn off water for significant non-compliers during emergency drought events. More information on Drought status can be found under the State's drought monitoring webpage.

Table 5: New Service Connection Development Fees and Meter Charge

Service Tap or Meter	Development Fee
1-inch with 5/8 meter	$ 903.89
1 ½-inch	$ 1,255.64
2-inch	$ 2,141.97
3-inch	$ 8,124.71
4-inch	$10,340.81
6-inch	$15,510.81
8-inch	$21,419.69
12-inch	$35,721.37
Fire Service 4-inch or less	$ 1,477.22
Fires Service > 4-inch & hydrants	$ 2,954.44

Notes
* Charged per billing.
** Included in minimum fee.

Table 6: Meter Maintenance Charge (Billed Every Billing Period - Currently Every 6 Months)

Meter Size	Fee
5/8- inch	N/A
3/4-inch	$18.30
1-inch	$19.40
1 ½-inch	$37.00
2-inch	$45.90
Sizes 3 -inch and above	TBD for project

Table 7: Fire Protection Readiness to Serve Charge (Private/Town)
Readiness to serve charge includes usage required for fire suppression and testing.

Fire Line Size[2]	Multiplier (2-inch equivalent)	Annual Readiness to Serve Charge
2-inch	1.0	$56.42
3-inch	2.8	$157.98
4-inch	5.7	$323.86
6-inch	11.2	$631.93
8-inch and larger	32.0	$1,805.51
Hydrants	2.5	$141.06

[2] As measured on diameter of rise pipe when it first comes through floor or slab of the building

APPENDICES

Appendix A: Hydrostatic Testing Procedure and Associated Forms

Appendix B: Commonly Asked Questions

1. Why do I receive a charge for our fire suppression system?
    a. Fire lines typically are not metered. This charge is a readiness fee to provide the necessary water to the premises for fire suppression.

2. Why do I receive a charge for non-metered active lateral service fee?
    a. Early in the history of the Wareham Fire District, it was not uncommon for buildings on the same grounds to have a lateral line run to another building which was not metered. This is a practice we no longer allow, but for those buildings which were grandfathered, this fee will show up on your bill as a flat fee for water consumed.

3. What does the new service connection development fee cover?
    a. The purpose of this fee is to cover the cost of the infrastructure that has already been built to provide you water.

4. How do I find out where my water service line is located?
    a. You can call the Water Department and we will come out to mark out the approximate location(s) of your water service line.

5. Who owns the water service line?
    a. The WFD owns to the curb stop isolation valve. The homeowner owns from the curb stop to the water meter. See Figure in Appendix C.

6. Why do I need to use a WFD approved contractor to repair or update my water service line?
    a. Since the WFD does not own the service line between the curb stop and water meter, the WFD wishes to ensure that contractor performing the work is qualified and installs the service line within the guidelines and rules and regulations of the WFD. Service lines installed incorrectly have a greater propensity to leak which is lost water. Lost water increases the cost of the water to you.

7. I do not understand how my water bill is calculated.
    a. Your bill can be broken down into five main categories of charges:
        i. Flat fee charged for up to 2000 cubic feet of usage. See Table 1.
        ii. There are three bins set up for water consumption over 2,000 cubic feet at an increasing rate. The purpose of these bins is to encourage water conservation. See Table 1.
        iii. Capital Improvement Project or CIP fees used to recover the cost from rehabilitating projects or projects improving the water system. See Table 1
        iv. Late charge fees.
        v. Service fees or miscellaneous fees as noted.
    b. An example bill that has been marked-up is provided below. An individual account uses 4,000 cubic feet (cf) of water over a 6-month period. The consumption is broken down as 1.) 2,000 cf flat fee of $120 and 2.) 2,000 cubic feet (i.e. 4,000 minus 2,000 cf) at the step one usage of $0.85/100 cf or $17.00. The total consumption portion of $137.00. The CIP fee (FY19) is $2.2078/100 cf. For 4,000 cubic feet of usage yields a CIP bill of $88.31. The total water bill would then be $137.00 + $88.31 = $225.31.

8. How many gallons are in 1 cubic foot?
    a. There are approximately 7.48 gallons in 1 cubic foot of water.

9. Why do I pay for a backflow testing fee or for installing a cross connection device?
    a. A cross connection is defined as a physical connection between water that is portable with water that is not potable. Under 301 CMR 22.22 - Cross Connection Distribution System Protection, the state requires the WFD to test the cross-connection systems. As such, the WFD charges for these cross-connection tests to recoup the cost to have staff to maintain these systems per State Law.

10. Why do I pay a meter maintenance fee?
    a. The purpose of this fee is two-fold. The first is to encourage users to obtain the smallest water meter. Generally, the smaller water meters are more accurate at metering smaller flows. The second reason is to recoup the cost of the meter replacement when the meter is replaced. The District does not charge for replacement meters at the time of installation and as a goal replaces meters at an age of 10 to 12 years old. The water meters and associated components cost (2019 dollars) the following:
        i. ¾ inch meter: $360
        ii. 1-inch meter: $382
        iii. 1.5-inch meter: $729
        iv. 2.0-inch meter: $903

Appendix C: Profile of Service Line and Demarcation of Ownership

Note Water Meter Owned by WFD.

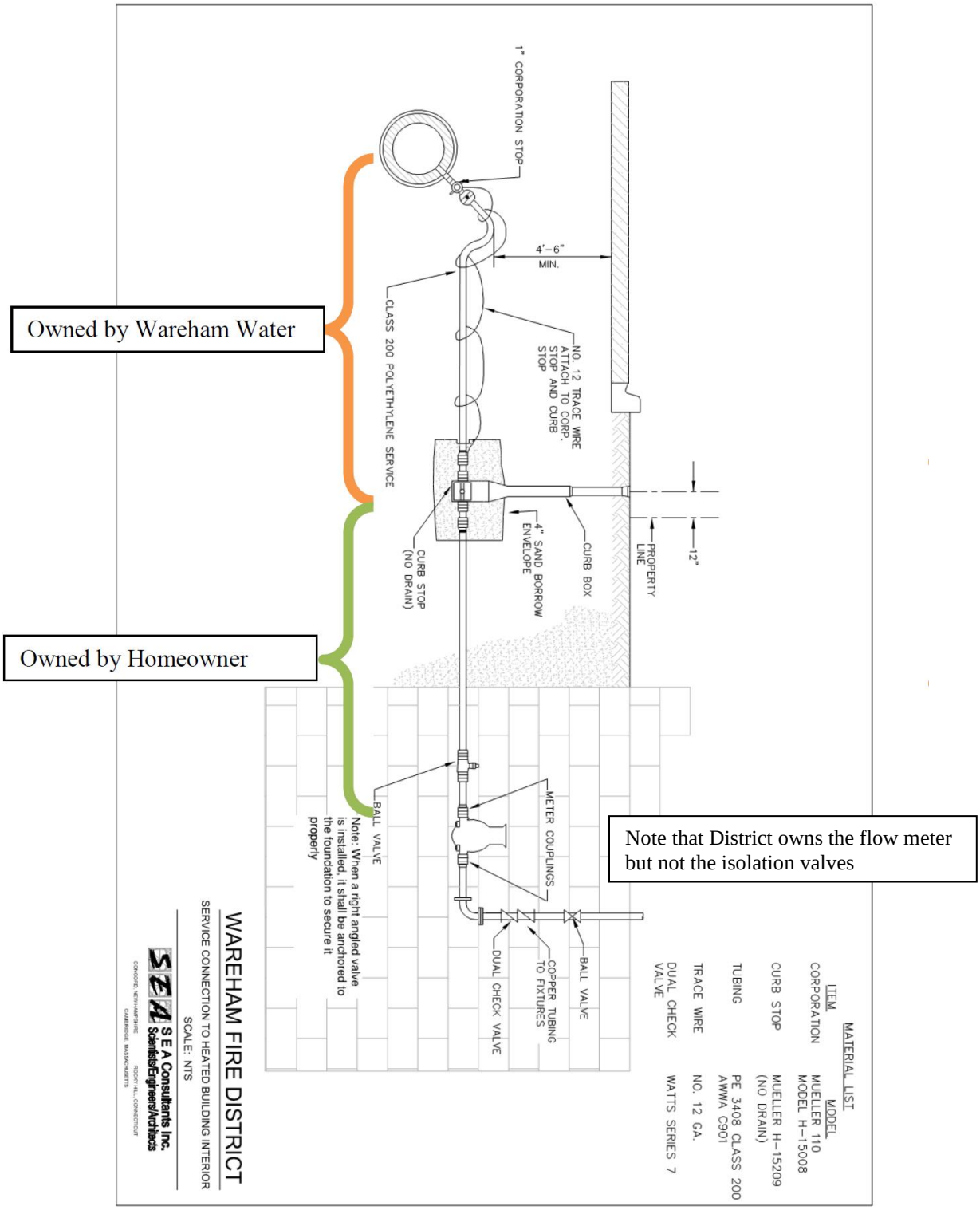

Appendix D – Price Adjustment Clauses

DOCUMENT 00812

SPECIAL PROVISIONS MONTHLY PRICE ADJUSTMENT FOR DIESEL FUEL AND GASOLINE – ENGLISH UNITS

This monthly fuel price adjustment is inserted in this contract because the national and worldwide energy situation has made the future cost of fuel unpredictable. This adjustment will provide for either additional compensation to the Contractor or repayment to the Town, depending on an increase or decrease in the average price of diesel fuel or gasoline.

This adjustment will be based on fuel usage factors for various items of work developed by the Highway Research Board in Circular 158, dated July 1974. These factors will be multiplied by the quantities of work done in each item during each monthly period and further multiplied by the variance in price from the Base Price to the Period Price.

The Base Price of Diesel Fuel and Gasoline will be the price as indicated on MassDOT's web site (www.mhd.state.ma.us) for the month in which the contract was bid, which includes State Tax.

The Period Price will be the average of prices charged to the State, including State Tax for the bulk purchases made during each month.

This adjustment will be effected only if the variance from the Base Price is 5% or more for a monthly period. The complete adjustment will be paid in all cases with no deduction of the 5% from either upward or downward adjustments.

No adjustment will be paid for work done beyond the extended completion date of any contract.

Any adjustment (increase or decrease) to estimated quantities made to each item at the time of final payment will have the fuel price adjustment figured at the average period price for the entire term of the project for the difference of quantity.

The fuel price adjustment will apply only to the following items of work at the fuel factors shown: **ITEMS COVERED**	**FUEL FACTORS**	
	Diesel	**Gasoline**
Excavation and Borrow Work: Items 120,120.1,121,123,124,125,127,129.3,140,140.1,141, 142,143,144,150,150.1,151and 151.1 (Both Factors used)	0.29 Gallons / CY.	0.15 Gallons / CY
Surfacing Work: All Items containing Hot Mix Asphalt	2.90 Gallons / Ton	Does Not Apply

****

END OF DOCUMENT

DOCUMENT 00811
SPECIAL PROVISIONS
MONTHLY PRICE ADJUSTMENT FOR HOT MIX ASPHALT (HMA) MIXTURES

The Price Adjustment will be based on the variance in price for the liquid asphalt component only from the Base Price to the Period Price. It shall not include transportation of other charges. This Price Adjustment will occur on a monthly basis.

Base Price

The Base Price of liquid asphalt on a project as listed in the Notice to Bidders section of the bid documents is a fixed price determined at the time of bid by the Town by using the same method as for the determination of the Period Price detailed below.

Period Price

For contracts bid after December 2008. Will show the Period Price of liquid asphalt for each monthly period as determined by MassDOT using the average selling price per standard ton of PG64-28 pacing grade (primary binder classification) asphalt, FOB manufacturer's terminal, as listed under the "East Coast Market – New England, Boston, Massachusetts area" section of the Poten & Partners, Inc. "Asphalt Weekly Monitor". This average selling price is listed in the issue having a publication date of the second Friday of the month and will be posted as the Period Price for that month. MassDOT will post this Period Price on its website within two (2) business days following their receipt of the relevant issue of the "Asphalt Weekly Monitor". Poten & Partners, Inc. has granted MassDOT the right to publish this specific asphalt price information sourced from the Asphalt Weekly Monitor.

Price Adjustment Determination, Calculation and Payment

The Contract Price of the hot mix asphalt will be paid under the respective item in the Contract. The price adjustment, as herein provided, upwards or downwards, will be made after the work has been performed, using the monthly period price for the month during which the work was performed. The Price Adjustment applies only to the actual virgin liquid asphalt content in the mixture placed on the job in accordance with the Standard Specifications for Highways and Bridges, Div. III, Section M3.11.03.

The Price Adjustment will be a separate payment item. It will be determined by multiplying the number of tons of hot mix asphalt mixtures placed during each monthly period times the liquid asphalt content percentage times the variance in price between the Base Price and Period Price of liquid asphalt.

This Price Adjustment will be paid only if the variance from the Base Price is 5% or more for a monthly period. The complete adjustment will be paid in all cases with no deductions of the %5 from either upward or downward adjustments.

No Price Adjustment will be allowed beyond the Completion Date of this Contract, unless there is a Town-approved extension of time.

****

END OF DOCUMENT

DOCUMENT 00814

SPECIAL PROVISIONS PRICE ADJUSTMENT FOR PORTLAND CEMENT CONCRETE MIXES

This Price Adjustment will occur on a monthly basis.

The Price Adjustment will be based on the variance in price for the Portland cement component only from the Base Price to the Period Price. It shall not include transportation or other charges.

The Base Price of Portland cement on a project is a fixed price determined at the time of bid by the Town by using the same method as for the determination of the Period Price below.

The Period Price of Portland cement will be determined by using the latest published price, in dollars per ton (U.S.), for Portland cement (Type I) quoted for Boston, U.S.A. in the **Construction Economics** section of *ENR Engineering News-Record* magazine or at the ENR website http://www.enr.com under **Construction Economics**. The Period Price will be posted on the MassDOT website the Wednesday immediately following the publishing of the monthly price in ENR, which is normally the first week of the month.

The Contract Price of the Portland cement concrete mix will be paid under the respective item in the Contract. The price adjustment, as herein provided, upwards or downwards, will be made after the work has been performed, using the monthly period price for the month during which the work was performed.

The price adjustment applies only to the actual Portland cement content in the mix placed on the job in accordance with the Standard Specifications for Highways and Bridges, Division III, Section M4.02.01. No adjustments will be made for any cement replacement materials such as fly ash or ground granulated blast furnace slag.

The Price Adjustment will be a separate payment item. It will be determined by multiplying the number of cubic yards of Portland cement concrete placed during each monthly period times the Portland cement content percentage times the variance in price between the Base Price and Period Price of Portland cement.

This Price Adjustment will be paid only if the variance from the Base Price is 5% or more for a monthly period. The complete adjustment will be paid in all cases with no deduction of the 5% from either upward or downward adjustments.

No Price Adjustment will be allowed beyond the Completion Date of this Contract, unless there is a Town-approved extension of time.

********** *

END OF DOCUMENT

Appendix E – MassDOT Division 2 – Construction Details

COMMONWEALTH OF MASSACHUSETTS DEPARTMENT OF TRANSPORTATION STANDARD SPECIFICATIONS

for Highways and Bridges

2023 Edition

DIVISION II

massDOT
Massachusetts Department of Transportation
Highway Division

TABLE OF CONTENTS

Division II: Construction Details

Section 100: Earthwork, Grading, Demolition, Rodent Control and Borings II.1
Subsection 101: Clearing and Grubbing II.1
Subsection 112: Demolition of Buildings, Structures and Bridges II.5
Subsection 119: Control of Rodents II.9
Subsection 120: Excavation II.10
Subsection 140: Excavation for Structures II.16
Subsection 148: Dredging II.25
Subsection 150: Embankment II.28
Subsection 170: Grading II.36
Subsection 190: Borings II.38

Section 200: Drainage II.54
Subsection 201: Basins, Manholes and Inlets II.54
Subsection 220: Adjustment, Rebuilding and Remodeling of Drainage Structures II.57
Subsection 227: Drainage System Sediment II.60
Subsection 230: Culverts, Storm Drains, and SewEr Pipes II.62
Subsection 258: Stone for Pipe Ends II.67
Subsection 259: Crushed Stone for Bleeders II.68
Subsection 260: Subdrains II.69
Subsection 270: Pipes Removed and Relaid or Stacked II.71
Subsection 280: Waterways II.73

Section 300: Water Systems II.75
Subsection 301: Water Systems II.75

Section 400: Sub-Base, Base Courses, Shoulders, Pavements and Berms II.82
Subsection 401: Gravel Sub-Base II.82
Subsection 402: Dense Graded Crushed Stone for Sub-Base II.83
Subsection 403: Reclaimed Pavement for Base Course and/or Sub-Base II.84
Subsection 404: Reclaimed Pavement Borrow Material II.89
Subsection 415: Pavement Milling II.90
Subsection 430: Cement Concrete Base Course II.97
Subsection 440: Roadway Dust Control II.99
Subsection 445: Shoulders II.100
Subsection 450: Hot Mix Asphalt Pavement II.103
Subsection 460: Hot Mix Asphalt Pavement for Local Streets II.180
Subsection 466: Stress Absorbing Membrane & Stress Absorbing Membrane Interlayer II.223
Subsection 470: Hot Mix Asphalt Berm II.235
Subsection 472: Temporary Asphalt Patching II.237
Subsection 476: Cement Concrete Pavement II.238
Subsection 477: Milled Rumble Strips II.263
Subsection 480: Pavement Crack Sealing II.264

Subsection 482: Sawcutting II.272
Subsection 485: Granite Rubble Block Pavement II.273
Subsection 486: Ultrathin Bonded Overlay II.275

Section 500: Curb and Edging II.289

Subsection 501: Curb, Curb Inlets, Curb Corners and Edging II.289
Subsection 580: Curb or Edging Removed and Reset; Removed and Stacked or Removed and Discarded II.294

Section 600: Highway Guard, Fences and Walls II.298

Subsection 601: Guardrail II.298
Subsection 628: Impact Attenuators II.301
Subsection 629: Concrete Barrier II.304
Subsection 630: Maintenance of Highway Guard II.307
Subsection 644: Chain Link Fences and Gates II.309
Subsection 660: Metal Pipe Rail II.313
Subsection 665: Fences and Gates Removed and Reset, and Removed and Stacked II.315
Subsection 670: Sedimentation Fence II.317
Subsection 685: Stone Masonry Wall II.319
Subsection 690: Walls Removed and Rebuilt II.320

Section 700: Incidental Work II.323

Subsection 701: Cement Concrete Sidewalks, Pedestrian Curb Ramps and Driveways II.323
Subsection 702: Hot Mix Asphalt Sidewalks and Driveways II.326
Subsection 710: Bounds II.339
Subsection 715: Rural Mail boxes Removed and Reset II.341
Subsection 717: Metal Bin-Type Retaining Wall II.342
Subsection 740: Engineer's Field Office and Materials Laboratory (Each with Pertinent Equipment) II.345
Subsection 746: Transportation Vehicle II.350
Subsection 748: Mobilization II.352
Subsection 751: Loam II.353
Subsection 760: Impervious Soil Borrow II.356
Subsection 765: Seeding II.356
Subsection 766: Refertilization II.359
Subsection 767: Mulching and Erosion Control II.361
Subsection 769: Pavement Milling Mulch Under Guardrail II.364
Subsection 770: Sodding II.365
Subsection 771: Planting Trees, Shrubs and Groundcover II.367

Section 800: Traffic Control Devices II.377

Subsection 801: Conduit, Manholes, Handholes, Pull Boxes and Foundations II.377
Subsection 813: Wiring, Grounding and Service Connections II.384
Subsection 815: Traffic Control Signals II.393
Subsection 820: Highway Lighting II.405
Subsection 824: Flashing Beacons, Illuminated Warning Signs, and Lighted Barrier Arrows II.416

Subsection 828: Traffic Signs II.417
Subsection 840: Sign Supports II.425
Subsection 850: Traffic Controls for Construction and Maintenance Operations II.430
Subsection 860: Reflectorized Pavement Markings II.444
Subsection 871: Non-Motorized Traffic Data Collection II.449

Section 900: Structures II.455

Subsection 901: Cement Concrete II.455
Subsection 940: Driven Piles II.494
Subsection 945: Drilled Shafts II.516
Subsection 950: Sheeting II.538
Subsection 955: Treated Timber II.540
Subsection 960: Structural Steel and Miscellaneous Metal Products II.542
Subsection 961: Maintenance Painting of Steel Bridges II.559
Subsection 965: Membrane Waterproofing for New Bridge Decks II.580
Subsection 966: Membrane Waterproofing for Bridge Deck Repairs II.593
Subsection 970: Damp-Proofing II.599
Subsection 971: Asphaltic Bridge Joint System II.601
Subsection 972: Strip Seal Bridge Joint System II.604
Subsection 975: Metal Bridge Railings, Protective Screens and Snow Fences II.607
Subsection 983: Revetment II.612
Subsection 995: Bridge Structure II.616
Subsection 996: Noise Barrier Structure II.618

DIVISION II:
CONSTRUCTION DETAILS

Section 100: Earthwork, Grading, Demolition, Rodent Control and Borings

Section 200: Drainage

Section 300: Water Systems

Section 400: Sub-Base, Base Courses, Shoulders, Pavements and Berms

Section 500: Curb and Edging

Section 600: Highway Guard, Fences and Walls

Section 700: Incidental Work

Section 800: Traffic Control Devices

Section 900: Structures

SECTION 100: EARTHWORK, GRADING, DEMOLITION, RODENT CONTROL AND BORINGS

SUBSECTION 101: CLEARING AND GRUBBING

DESCRIPTION

101.20: General

This work shall consist of clearing, grubbing, cutting, removal and disposal of all vegetation and debris from areas as shown on the plans or designated by the Engineer. The work shall also include the preservation from injury or defacement of all vegetation and objects designated by the Engineer to remain.

CONSTRUCTION METHODS

101.60: General

The burning of trees, brush, stumps, etcetera, will not be permitted. The Contractor shall provide other satisfactory methods of disposal without additional compensation.

The Contractor shall obtain written permission of the Engineer before storing debris within the Right-of-Way. Any clearing operations beyond the limits set by the Engineer shall be done with the approval of the Engineer and at the Contractor's expense. All such areas shall be restored to a condition acceptable to the Engineer including necessary mulching, seeding, and planting without additional compensation.

The Engineer shall be provided with notarized copies of agreements between the Contractor and owners of land used as disposal or storage areas.

When fencing is installed outside normal clearing areas, every reasonable effort shall be made to preserve trees or shrubs whose removal is not essential to the installation of the fencing.

Acceptable material obtained on the project may be used to produce wood chip mulch. The Contractor shall use an approved chipper and ¼-in. knife setting as described under M6.04.3: Wood Chip Mulch. Material obtained from Elm trees shall not be accepted for use.

Wood chips produced on the project shall be stockpiled within the location and used where and as directed.

Except for materials used for making wood chip mulch, the Contractor shall make all arrangements and negotiations necessary for the satisfactory disposal of trees, shrubs, stumps, roots, dead wood and other litter, in areas outside the Right-of-Way and in such manner that no condition or accumulation of material shall be permitted to disfigure or mar the finished landscape.

101.61: Clearing and Grubbing

The stumps of all trees, brush and major roots shall be grubbed and removed in all excavation areas and under all embankments where the original ground level is within 3 ft of the subgrade or slope of embankments.

All trees, stumps, and brush shall be cut off within 6 in. of the ground in embankment areas where the original ground level is more than 3 ft below the subgrade or slope of embankments.

Trees and shrubs that are specifically designated by the Engineer not to be cut, removed, destroyed or trimmed shall be saved from harm and injury.

All damage done to trees by the Contractor's operation and all branches of trees extending within the roadway shall be trimmed as directed to provide the minimum vertical clearance including selective trimming of such trees as directed.

101.62: Tree Trimming and Selective Clearing and Thinning

A. General.

The work under this item shall consist of the removal of hazardous growth and dead, dying or diseased plant material; the removal of groups and individual plants which interfere with the growth of more desirable types of trees and the clearing away of lesser growth that may obscure outstanding trees, tree groups, or scenic views. Any part of tree trunks or base of plant material located on the Location Lines shall be considered within the State Highway Limits.

Densely wooded areas shall be thinned to provide space for healthy growth by eliminating thinner, weaker trees and the reduction of number of varieties.

The desired appearance to be attained in certain areas of heavy growth may require three or more operations. First, the obvious dead, dying and diseased trees and undergrowth shall be cut and cleared out of the area. This work includes removal of any previously fallen trees, branches, uprooted stumps and other debris as directed. Next, the area is to be thinned out, as directed, by removing the less desirable trees and brush which interfere with the growth of the better plant material. Finally, clear out lesser growth which may obscure outstanding trees, tree groups or scenic views.

Tree up-branching and shaping under this item will be restricted to trees which have limbs and branches restricting sight distance, extending over roadways, shoulders, turn outs, etc. Up-branching or trimming will be required to produce the minimum vertical clearance directed by the Engineer.

B. Prosecution of Work.

(Supplementing Subsection 8.03: Prosecution of Work)

All trimming and pruning shall conform to ANSI A300 *For Tree Care Operations - Tree, Shrub, and Other Woody Plant Management - Standard Practices*.

Recognized tree surgery practices include among many others, the fact that all limbs and branches which require removal and all stubs regardless of age must be cut flush either to a union with the next larger sound limb or branch or flush to the trunk of the tree.

The cutting shall be performed by arborists with the ISA Tree Worker Climber Specialist certification. Care shall be exercised by the Contractor to prevent injury to trees and shrubs designed to be preserved. Any injury to limbs, bark or roots of such plants shall be repaired by the Contractor, as directed, or the plants replaced without additional compensation for such repair or replacement. Injury to limbs, bark or roots of such plants shall be repaired or the plants replaced by

the Contractor, at the discretion of the Engineer, without additional compensation for such repair or replacement.

C. Cutting and Treatment of Stumps and Stubble.

Standing trees, undesirable brush and existing stumps to be removed shall be cut flush with the ground and a 2-in. tolerance permitted and the resulting stumps or stubble.

The Contractor shall use all necessary precautions to prevent injury to crops or damage to other desirable growth on private abutting property, as well as to those within the Right-of-Way, and shall assume full responsibility for any damage.

D. Disposal of Cuttings.

The Contractor may dispose of cut material by processing into a wood chip mulch as described in M6.04.3: Wood Chip Mulch and spreading uniformly throughout the cleared and thinned areas as directed by the Engineer.

101.63: Disposition of Trees, Stumps and Brush

All trees, tree stumps, including trunk base, root flare and attached root mass and brush to be cleared shall be subject to the regulations and requirements of state and local authorities governing the disposal of such materials. Trees, stumps and brush shall be chipped to 1-in. maximum chip dimension and spread to a depth not to exceed 4 in., in a location approved by the Engineer, at no additional compensation.

The trees, stumps and brush including cuttings, shall not be stored on site for more than 24 hours unless chipped.

If the existing ground in the area is disturbed by any of the work or equipment, the Contractor shall rough-grade and loam and seed if necessary the disturbed areas without additional compensation.

The Contractor shall be responsible for ensuring that any and all plant pests on site shall not be carried off site and shall be either destroyed or otherwise contained on site. Plant pests shall include invasive plants, noxious weeds, insect pests, and plant diseases (including infected plant tissue). Method of destruction or containment shall be approved by the Engineer. If invasive or contaminated material cannot be either destroyed or contained on site, contractor shall submit plans for disposal for approval by the Engineer. For current list of plant pests and applicable management procedures see the following on-line references:

Invasive Plants: http://www.massnrc.org/mipag/docs/MIPAG_FINDINGS_FINAL_042005.pdf
Plant Pests: http://www.massnrc.org/pests/factsheets.htm#commodity

COMPENSATION

101.80: Method of Measurement

Both Clearing and Clearing and Grubbing shall be measured by the horizontal plane area and will be the number of acres within the limiting stations of the project and/or as designated by the Engineer and the outside limits of measurement shall extend to a point 5 ft beyond the top or bottom of slopes, excluding existing roadway and shoulder surfaces, streams or bodies of water.

Areas outside of the limits specified above, when cleared and grubbed in connection with the construction of fences and noise barriers shall be computed on the basis of a 10-ft width multiplied by the total length installed, and when done in connection with excavating ditches or trenches the width shall be limited to 5 ft beyond the outer edges of the excavation.

Measurement of selective clearing and thinning will be based on the actual number of acres which receive the required attention. Approximate locations will be shown on the plans or detail sheets and as designated in the field by the Engineer.

Trees and stumps, regardless of size, that fall within an area to be cleared and grubbed or selectively cleared and thinned shall not be measured separately for payment.

Only trees that have a shortest diameter of at least 9 in. and less than 2 ft shall be included in Item 103. Trees Removed (Diameter Under 2 feet). Only trees that have a shortest diameter of 2 ft or more shall be included in the Item 104. Trees Removed (Diameter 2 feet and Over).

Tree trimming shall be measured along the length of the tree trimming operation. Sections along the length of the tree trimming operation where no trees are required to be trimmed for a length of 30 ft or more shall be subtracted from the total length of the tree trimming operation.

The item of Stumps Removed shall include the removal and satisfactory disposal of all tree stumps which remain in their original position and measure 9 in. or more in shortest diameter at the cutoff point, where the trees have been previously removed by others. A stump shall not be construed as a tree under these specifications unless the trunk extends over 6 ft above the average ground.

Trees or stumps to be removed which have the shortest diameter specified for payment will be measured in place by the following procedure:

Where the tree consists of a single trunk extending more than a 3 ft vertical height above the average natural ground line, the shortest diameter shall be measured at the 3-ft level above the average elevation of the original ground.

Any tree whose main trunk separates into multiple trunks or which has limbs or branches growing out from the main trunk below the 3-ft level defined hereinbefore shall have its shortest diameter measured at the lowest point on the main trunk where multiple growth or branching out begins.

The shortest diameter of a stump shall be measured at the cutoff except that where multiple growth begins below cutoff, the shortest diameter shall be measured at the main trunk where multiple growth begins.

Measurement for payment under the respective items shall be such that any individual growth to be classed as a tree stump shall be measured in a manner to limit payment to one single tree or stump at each particular location of the individual growth. When multiple trunks with a common root system are separated at ground level each separate trunk shall be considered as an individual growth under these specifications.

The quantity of trees or stumps to be paid for will be the number actually removed by the Contractor in the completed and accepted work as determined by count.

101.81: Basis of Payment

Clearing and Grubbing will be paid at the contract unit price per acre and shall include the removal of all brush, trees, stumps and roots within the designated area. No separate payment will be made for any individual trees or stumps removed within the area.

Clearing will be paid at the contract unit price per acre and shall include the removal of all brush undergrowth and trees, within the designated area. No separate payment will be made for any individual trees removed within the area.

Selective Clearing and Thinning will be paid at the contract unit price per acre and shall include the removal of all trees as directed, brush, dead, dying and diseased trees, previously fallen trees, branches, uprooted stumps and other debris within the designated area. No separate payment will be made for any individual trees or stumps removed within the area.

When clearing or clearing and grubbing work is not included in the proposal as a payment item, payment for any such work will be included in the excavation or borrow items.

Individual trees to be removed will be paid for at the contract unit price per each and shall include the stump and major root systems. Only trees having a shortest diameter of 9 in. and over as defined in 101.80: Method of Measurement shall be measured for payment.

Tree Trimming will be paid for at the contract unit price per foot.

Stumps to be removed, as defined in 101.80: Method of Measurement, will be paid at the contract unit price per each and shall include the major root system.

The contract unit price shall include the cost of all arrangements and methods required to protect from harm all existing overhead or underground installations.

No payment shall be allowed for preparation and spreading of wood chips.

101.82: Payment Items

101.	Clearing and Grubbing	Acre
101.1	Clearing	Acre
102.	Selective Clearing and Thinning	Acre
102.1	Tree Trimming	Foot
103.	Tree Removed (Diameter Under 2 feet)	Each
104.	Tree Removed (Diameter 2 feet and Over)	Each
105.	Stump Removed	Each

SUBSECTION 112: DEMOLITION OF BUILDINGS, STRUCTURES AND BRIDGES

DESCRIPTION

112.20: General

The work to be done consists of demolishing completely such buildings and structures as are listed in the Proposal.

Said demolishing of the buildings shall be done on the site. Buildings as such shall not be removed intact from the site by the Contractor nor shall they be sold to others for such removal.

"Buildings" or "Structures" shall be considered interchangeable terms within the scope of these Specifications.

The Contractor shall not proceed with the demolition of any building or structure until they receive written approval.

Structures which must be removed, and which are not listed in the Proposal will be removed by others at the direction of the Department. The Contractor's attention is directed to the relevant provisions of Subsection 8.04: Removal or Demolition of Buildings and Land Takings, Subsection 8.08: Preservation of Roadside Growth, and Subsection 9.05: Final Acceptance and Final Payment, wherein it is stipulated that the Contractor shall have no claim for damages for any delay in the prosecution of the work under any of these items, or for the omission of any one or more of the items scheduled in the Proposal.

The Department may withdraw from the Contract any or all of the structures which are scheduled for demolishing and for which items are included in the Proposal, and the Contractor shall, in this case, have no redress against the Department for any loss in anticipated profits. The Contractor's attention is further directed to the probability that delay may be encountered in the prosecution of demolition or removal work and that as stipulated in said Subsection 8.04: Removal or Demolition of Buildings and Land Takings and Subsection 8.05: Claim for Delay or Suspension of the Work, the Contractor shall have no claim for damages for any delay in the prosecution of work hereunder, except as provided.

The Contractor shall be solely responsible for making all necessary arrangements and for performing any necessary work to the satisfaction of the Utility Companies and Municipal Departments involved in connection with the discontinuance or interruption of all public utilities or services, such as gas, water, sewer, electricity, and telephone, which will be affected by the work to be done under the Removal items specified in the Proposal.

CONSTRUCTION METHODS

112.60: Demolition of Buildings and Structures

Each item for demolition includes the demolition of the building or buildings as identified and described under the particular item listed in the Proposal, and the satisfactory disposal of the buildings and all contents therein. Basements shall be completely cleaned of all unsuitable materials and debris, all partition walls, and supports for the appurtenances to the buildings.

The foundation walls of the structures shall be broken down to a depth of not less than 1 ft below the existing ground level.

Cellar floors shall be broken into pieces having an area not more than 4 ft^2 with well-defined cracks through the full depth of the floor.

Holes having an area of not less than 1 ft^2 shall be made through the floor at intervals of not more than 10 ft lengthwise and crosswise, to provide vertical drainage.

Buildings without basements or cellars having concrete or masonry floors or slabs at ground level, when demolished, shall be removed to the ground floor grade. The floor or slab shall be removed and the area graded as directed.

All fences, debris, etc., on the parcel on which the building that is demolished is located shall be removed and the parcel left in a reasonably neat and safe condition

In case the building to be removed is served by a septic tank or cesspool, or underground fuel tanks, such structure or structures and appurtenant pipes shall be broken down or removed and all resulting cavities satisfactorily filled with selected excavated material placed in 1-ft layers and thoroughly compacted. If directed, the Contractor shall remove the contents of said structures prior to disturbing them, and the disposal thereof shall conform to the requirements of the local Board of Health. Underground fuel tanks and contents shall become the property of the Contractor and shall be carefully handled and removed and immediately disposed of in compliance with applicable safety and pollution control regulations.

The Department assumes no responsibility for any changes in the condition of the buildings, or for loss of fixtures, or equipment at any time.

All materials resulting from the demolition of the buildings shall become the property of the Contractor and they shall dispose the same outside and away from the site, except all acceptable solid fill shall be used in filling cellar holes before borrow is used. Solid fill shall consist of noncombustible material, such as brick, stone and plaster (but not wood lath) and shall contain no piece larger than ½ yd^3 in volume, or greater than 3 ft in dimension. All materials which consist of hazardous substances such as lead paint, asbestos, petroleum products, etcetera, shall be disposed of in accordance with state and federal environmental regulations. Acceptable materials from removal may be placed no higher than 1 ft below existing grade. All pipes and other conduits encountered and to be abandoned on account of the demolition shall be plugged with brick and mortar. Drainage structures shall be removed completely and the cavity completely filled with selected excavated material or borrow in 18-in. layers and thoroughly compacted.

A minimum depth of at least 1 ft of ordinary borrow shall be used as a cover and shall be reasonably leveled. The areas adjacent to the site of the removal shall be left in a neat and safe condition satisfactory to the Engineer. Upon completion of the work, all cellar holes shall be filled to the grade of adjacent ground in the manner specified hereinabove.

The Contractor shall protect all buildings which adjoin a structure to be demolished and shall leave the same in a permanently safe and satisfactory condition.

In accordance with the provisions of Subsection 7.10: Barricades and Warning Signs, Contractor shall erect suitable fences around unfilled basements and other dangerous locations created by their work, during demolition and prior to filling of cellar holes or cavities. All costs in connection with such fences shall be included in the contract price for the appropriate demolition item.

112.61: Demolition of Bridges

The Contractor shall not disturb any utility or property carrying water, gas. telephone, electric or similar service across the bridge unless they are permitted to do so by the Engineer.

If the Contractor is directed to make any repairs or to do any maintenance work on the present superstructure or bridge supports during the period it is open for public travel, the Contractor shall do the directed work in accordance with the provisions of Subsection 4.03: Extra Work.

The Contractor shall assume responsibility for the maintenance and safety of the present superstructure or bridge immediately on notice to them that the Engineer has closed the bridge to the public.

Where the bridge to be removed is over a railroad all work of removing the bridge superstructure and bridge supports shall be done at such times and in such manner as will cause the least possible interference with the operation, management, business or traffic of the railroad.

Demolition of Present Superstructure.

All materials in or on the superstructure of the present bridge, its supporting beams and braces, shall be satisfactorily removed. Such material as the present owner desires which are specified in the Special Provisions shall be stacked near the site as directed and convenient for removal by owner. The material that the present owner does not specify shall become the property of the Contractor.

Demolition of Present Bridge.

The work under this item shall include the removal and satisfactory disposal of the entire superstructure, as specified above, and the removal and satisfactory disposal of the substructure to the extent that the slopes in the abutment area will match the slopes of the adjacent embankment. Materials resulting from removal may be used as embankment materials on the project, if approved by the Engineer, without any additional compensation to the Contractor.

Stone, concrete masonry or other support shall be removed so that none of it will come within 2 ft of the finished slopes or within 3 ft of the roadway surface, and the remaining space shall then be backfilled.

When the bridge to be removed is over water, all parts of piers or other supports in the water shall be removed to the elevation of the bed of the stream or other body of water or as indicated on the plans or in the Special Provisions.

COMPENSATION

112.80: Method of Measurement

Ordinary borrow shall be measured as described under 150.80: Method of Measurement.

112.81: Basis of Payment

The work will be paid for at the contract lump sum price under the respective item for the particular building, structure or bridge designated to be demolished as set forth in the Proposal, which price shall include full compensation for all the work prescribed herein, except furnishing and placing ordinary borrow for cover where required.

112.82: Payment Items

112.1	Demolition of Building No. ____	Lump Sum
114.1	Demolition of Superstructure of Bridge No. ____	Lump Sum
115.1	Demolition of Bridge No. ____	Lump Sum

SUBSECTION 119: CONTROL OF RODENTS

DESCRIPTION

119.20: General

The work to be done consists of the control (extermination) of rodents, prior to the demolition of buildings, in dump areas, landfills or other areas so designated by the Engineer.

119.60: Control (Extermination)

This work shall consist of two phases as follows:

1. **Initial Treatment.**

This phase shall start immediately after execution of the Contract and shall be applied in all buildings to be razed and to all other buildings and areas within the limits of construction where, in the Engineer's judgement, rodents have gathered or may gather during the construction period. A toxic material consisting of zinc phosphide pre-packaged acute toxicants or another acute anti-coagulant which has been approved by the Massachusetts Department of Agricultural Resources, Pesticide Board, with a suitable bait shall be used. The treated bait shall be placed in all structures to be demolished so as to attract the greatest possible number of rodents; and in accordance with best practice.

2. **Maintenance.**

One week (more or less, as directed) after the "Initial Treatment," the Contractor shall start a program of maintenance to rid the structures and adjacent areas within the limits of this Contract of any remaining rodents, their carcasses, and to prevent their migration to other adjacent areas. The toxicant should be an acute anti-coagulant pre-mixed bait and used in accordance with the labeled and regulatory laws.

All visible carcasses of rodents shall be removed and disposed satisfactorily.

The toxic bait shall be renewed semi-monthly or as directed, throughout said maintenance period until the structures have been demolished and the cellar holes have been filled to the extent required.

All extermination operations shall be in accordance with the rules and regulations of the Municipality and State Health Departments.

COMPENSATION

119.81: Basis of Payment

The work will be paid for at the contract lump sum price.

119.82: Payment Items

119. Rodent Control.....Lump Sum

SUBSECTION 120: EXCAVATION

DESCRIPTION

120.20: General

This work shall consist of excavation or disposal of all materials not being removed under some other item which is encountered within the limits of the Contract in accordance with the specifications and in close conformity with the lines, grades, thicknesses and cross sections shown on the plans or established by the Engineer. All excavation will be classified as "Earth Excavation," "Class A Rock Excavation," "Muck Excavation," and "Unclassified Excavation," as hereafter described.

Materials from all classes of excavation which are unsuitable, and any surplus of suitable materials remaining after completing the formation of embankments, shoulders, approaches, widening of roadway or embankment slopes as directed or backfilling, will be known as waste and shall be disposed of by the Contractor outside the Right-of-Way at their responsibility and expense. Waste material shall not be disposed of in the flood channel areas of any stream.

Existing concrete foundations, if not interfering with the proposed construction, may be abandoned in place with approval of the Engineer. Foundations under the roadway surface shall be removed to a depth of 3 ft below finished grade. Foundations outside of the roadway surface shall be removed to a depth of 1 ft below the proposed finished grade.

120.21: Earth Excavation

Earth Excavation shall consist of all excavation not included as Class A Rock Excavation or excavation which is otherwise classified and paid for.

Earth Excavation shall also include as incidental to the general work the removal and disposal of abandoned junk cars, trash, signs, fences, guardrail, guide posts, hot mix asphalt berms and debris of every nature.

120.22: Class A Rock Excavation

When encountered within the limits of roadway or channel excavation. Class A Rock Excavation shall consist of:

(1) Igneous, metamorphic and sedimentary rock which cannot be excavated without blasting or the use of rippers.

(2) All rock, stone, parts of stone, brick or cement concrete pavement, parts of cemented stone walls or masonry structures measuring 1 yd^3 or more that require blasting for removal.

120.23: Muck Excavation

Muck excavation shall consist of the removal and disposal of saturated or unsaturated mixtures of soils and organic matter not suitable for foundation material regardless of moisture content.

120.26: Unclassified Excavation

This work shall consist of all earth excavation as specified in 120.21: Earth Excavation, rock excavation as specified in 120.22: Class A Rock Excavation, and all other excavation not provided elsewhere in the contract.

CONSTRUCTION METHODS

120.60: General

A. Sequence of Operations

When required, the Contractor shall so prosecute their work that traffic will be maintained over and through the work with a maximum of safety and convenience in accordance with the provisions of Subsection 7.09: Public Safety and Convenience.

The sequence of all excavation operations, earth or rock, shall be such as to insure the most efficient utilization of excavated materials into embankments (as specified in Subsection 150: Embankment) and the use of a minimum amount of borrow. When the plans require excavation in areas in close proximity to existing roads, structures and utilities it shall be the responsibility of the Contractor at their expense to construct suitable drainage ditches or use other satisfactory means and methods to protect and maintain the stability of such roads, and structures located immediately adjacent to but outside the limits of excavation.

The Contractor's attention is directed to the requirements of the provisions for the prevention of water pollution and erosion control. The Contractor shall prosecute the work as to prevent the ponding of water. Each lift of excavation shall be visibly crowned to allow drainage of surface and rainwater.

B. Disposal of Excavated Materials.

All suitable materials obtained from the excavation or from the removal of present structures shall be used either in the formation of embankments, shoulders, slopes, loam or clay hardening, etc., or for backfill under, over, or around structures, pipe culverts or drains and at such other places as directed and the material shall be placed and compacted in a manner conforming to the specifications for the particular type of work required without additional compensation. It shall be the Contractor's responsibility to obtain from the Engineer approval for the use and placing of various materials encountered in excavation.

It shall be the Contractor's responsibility to dispose of material designated as unsuitable and any excavated material which is not required, except as noted in Paragraph C of this subsection, outside of the Right-of-Way in such a manner as not to impact mature trees or wetlands, obstruct streams

or otherwise impair the drainage, appearance, safety or efficiency of any structure or any other part of the road.

No materials from the excavation, nor from construction, shall be deposited in flood plains nor within 100 ft of any body of water without compliance under provisions of Chapter 131, Section 40 of the Massachusetts Wetlands Protection Act. Notification to the Engineer, in writing, will be required wherein such filling has been authorized by the local Conservation Commission.

No excavated material shall be placed outside of and adjacent to the Right-of-Way without the written approval of the Engineer. The Contractor shall certify that they have proper releases from property owners within 500 ft of Right-of-Way which is used as disposal areas for unsuitable material.

The Contractor shall construct adequate retaining banks around perimeters of the disposal areas outside the project to protect existing roads, stream channels, and adjoining properties (including underground water supplies) against the spread of, or contamination by, the excavated material. Stream channels and ditches within and adjacent to the project shall be maintained as at present or as specifically altered by the design of the project.

All waste areas shall be thoroughly stabilized by means of drains, proper grading, mulching, loaming and seeding as required to promote vegetation and to ensure the areas will not be subject to erosion.

C. Grading Outside of the Location.

Where directed, earth, loam, or borrow of the kind required shall be used for grading outside of the Right-Of-Way and the surface shall be raked, smoothed and rolled. Excavation shall be made as directed on slopes or surfaces outside of and adjoining the location.

When temporary or existing roads are abandoned within the limits of highway work and beyond the limits of the main roadway slopes, their surfaces shall be removed and graded and loamed for a neat and natural appearance for proper drainage of surface water, as directed.

120.61: Earth Excavation

This work shall be performed in the manner specified in 120.60: General and 170.60: General.

120.62: Class A Rock Excavation

Class A Rock Excavation shall be performed in accordance with the requirements specified in 120.60: General, with the following additional requirements:

The Contractor shall prosecute their work so that all rock available for disposal in embankments shall be removed previous to the final embankment formation. Rock shall be partially or completely stripped of overburden, as directed, before removal operations are begun. Loose or shattered fragments of rock which may be a hazard to traffic shall be removed from the slopes.

120.63: Presplitting Rock

Presplitting shall be required in rock cuts 10 ft or more in vertical height where designed slope is 1 horizontal to 4 vertical or steeper. Rock cuts more than 25 ft in vertical height may be presplit in stages (lifts) at the option of the Contractor, provided that no stage shall be less than 10 ft in depth

and further provided that no payment will be made for additional excavated quantities caused by offsetting presplitting holes beyond the specified face in the top on successive stages. Presplitting holes in successive stages shall be offset not more than 2 ft inside of the previously presplit face.

Prior to the blasting of any rock for removal, the Contractor shall presplit the rock along the designated cut face by the method hereinafter described to produce a uniform plane of rupture, so that the resulting face will not be affected by subsequent fragmentation blasting and excavation operations.

The Contractor shall adjust their blasting operations according to the characteristics and structure of the rock formation to obtain the required slope without fracturing the rock beyond the presplit face.

The sequence of operations shall be as follows:

1. Remove all overburden soil within the areas of proposed fragmentation blasting to expose the rock surface.
2. Drill 2.5- or 3-in. nominal diameter holes not more than 3 ft on centers along the top of the proposed slope line and at the required inclination, to the full depth of the cut or to a predetermined stage (lift) elevation. Presplit holes shall deviate not more than 0.5-ft at any point from the plane of specified slope, nor more than 1 ft at any point from a vertical plane through the top of the hole and normal to the plane of slope.
3. Fragmentation blast holes shall be positioned so that no portion of any blast hole shall be within 4 ft of the designated presplit face.
   The plane of presplitting slope as originally drilled shall not be penetrated by subsequent fragmentation blast holes.
4. The Contractor shall inspect and test each hole to determine the possible presence of any obstruction before placing the charge. No loading shall be permitted until the hole is clear of all obstructions. Precautions shall be used in placing the charge to prevent caving-in of material from the wall of the hole.
5. Cartridge explosives prepared and packaged by explosive manufacturing firms and approved by the Engineer shall be used in presplitting holes except, with prior permission of the Engineer, either of the following charges may be used as an alternative provided the results are satisfactory:
   (a) Continuous column commercial explosives manufactured especially for presplitting.
   (b) Multiple strands of high-strength (175-200 grains of explosive per foot) detonating fuse taped together at 4- to 6-ft intervals.
6. The spacing of the dynamite charge in each hole shall be accomplished by securely taping (or attaching by other approved means) each piece of dynamite to the detonating fuse at the selected intervals or by deck loading. If the latter method is used, the dynamite must be in intimate contact with the detonating fuse to assure detonation of all charges.
7. All space in each hole not occupied with the explosive charge shall be filled with ⅜-in. crushed stone meeting the requirements of M2.01.6. No other material or type of stemming will be permitted.
8. The detonation of presplit charges shall precede the detonation of adjacent fragmentation charges within the section by a minimum of 25-miliseconds.

120.64: Muck Excavation

The work of muck excavation shall be performed in accordance with the requirements of 120.60: General with the following additional requirements:

Muck shall be excavated to the estimated widths and depths shown on the plans and/or so as to completely remove the muck. Where a proposed bridge or other structure comes within the limits of muck excavation, that portion of the excavation within the limits of the proposed structure will be paid for as Muck Excavation.

120.65: Topsoil

When topsoil is excavated or stripped for reuse it shall remain on site and be stacked neatly outside the limits of the proposed slopes within the Right-of-way or such material may be temporarily stacked by the Contractor outside the Right-of-Way for their own convenience, with the approval of the Engineer, in which case the Contractor shall be responsible for all arrangements and negotiations. If the material stacked outside the Right-of-Way is not available when needed for use on the project, the Contractor will furnish at their expense an equal volume of equal material.

If the temporary storage areas outside the Right-of-Way require clearing and grubbing, the Contractor shall do such work without additional compensation.

Storage areas shall be cleared, grubbed and rough graded so that maximum amount of stacked material will be available for reuse.

The Contractor shall take care to avoid leaving any unsightly condition and to avoid unnecessary damage or injury to natural surroundings and roadside growth. The landscape shall be left in a neat and trim condition to the satisfaction of the Engineer upon completion of the work.

120.67: Unclassified Excavation

This work shall consist of the excavation, removal and satisfactory disposal, in accordance with the relevant provisions of 120.60: General of all materials listed under Subsection 120: Excavation necessary for the construction of the proposed work as shown on the Plans or as directed, except those materials for which payment is specified under other items of the Contract.

COMPENSATION

120.80: Method of Measurement

All classes of excavation will be measured in their original position by the cross-section method except where such measurement is impracticable the volume shall be measured by such other methods as the Engineer may determine.

In any case, payments will be made only for excavation to lines and grades as indicated on the plans or as directed.

Pay limits for rock excavation actually removed will be as follows:

1. For side slopes:
    (a) In excavation for side slopes up to a limit of 24 in. beyond and parallel to slope lines either shown on the plans or ordered in writing by the Engineer.

   (b) No allowance will be made for rock excavation beyond these specified lines in side slopes except that if ordinary borrow is required for the work and excess rock excavation is used in embankments such rock will be paid for as ordinary borrow.
2. Rock Excavation in curb and edging trenches not already paid for in previous rock excavation will be paid up to a width of 18 in., providing rock extends to that width.
3. For area between side slopes:
   (a) In excavation to subgrade an allowance of a depth of 6 in. below subgrade lines.
   (b) In any other rock excavation an allowance of a depth of 6 in. below lines of proposed excavation.

Boulders which are to be included in the item for rock excavation will be measured at the point of removal.

Presplitting of rock will be measured by the square yard of exposed rock face, measured from the top of exposed rock to the bottom of the Class A Rock Excavation at the presplit face, as directed.

120.81: Basis of Payment

All classes of excavation will be paid for at the contract unit price per yard of the particular type of excavation as defined hereinbefore.

In Contracts where ordinary borrow is required, excavated material taken by the Contractor with the prior written permission of the Engineer, and used on the project for purposes other than for forming embankments will be paid for at the contract price for the purpose of which it is used, in addition to the payment to be made for excavation, provided that any additional filling material made necessary by such use shall be replaced.

The amount of borrow to be replaced shall be as follows:

1. If Class A Rock Excavation is used in revetment, the revetment shall be measured in its final position, and this computed quantity shall be divided by 1.20 and the resulting quantity shall be the amount of borrow to be replaced.
2. If Earth Excavation is used for gravel borrow, special borrow, etc., the amount of gravel borrow, special borrow, etc., as computed (including any percentage added to in place measurement) shall be the amount of borrow to be replaced.

Payment shall be made only for the purpose the borrow was used until such time as replacement borrow is supplied, at which time an equal volume of excavation will be paid for.

In Contracts where excavated materials are used as described in the paragraph above and no additional filling material is required, the following will govern:

1. Material such as gravel, sand, special borrow, or impervious soil borrow obtained in excavation and used as gravel, sand borrow, special borrow or impervious soil borrow will be paid for only at the contract price for the purpose used.
2. Topsoil obtained in excavation and stacked for future use on the project will be paid for at the contract unit price for the item of Topsoil Excavated and Stacked (which price will include excavating for test pits required), but if such future use necessitates rehandling and spreading, payment will also be made at the contract unit price for Topsoil Rehandled and Spread.

3. No deduction from the item of Class A Rock Excavation will be made on account of the use of boulders or rock fragments in masonry or in revetment.

Presplitting of rock will be paid for at the contract unit price per square yard of exposed presplit rock face.

120.82: Payment Items

120.	Earth Excavation	Cubic Yard
120.1	Unclassified Excavation	Cubic Yard
121.	Class A Rock Excavation	Cubic Yard
122.	Presplitting Rock	Square Yard
123.	Muck Excavation	Cubic Yard

SUBSECTION 140: EXCAVATION FOR STRUCTURES

DESCRIPTION

140.20: General

Excavation for foundations of bridges, culverts, pipe drains, masonry walls, other structures and test pit excavation to determine the location of underground utilities shall be made to the depth and lines indicated on the plans or established by the Engineer.

140.21: Bridge Excavation

Bridge excavation shall include excavation required for construction of bridges, culverts having a clear square span of 8 ft or more, end walls and wingwalls that are a part of these structures and major wall structures as designated in the Contract Documents.

The excavation shall include the removal and satisfactory disposal of materials including piles, sheeting and timbers encountered in these constructions.

In areas where unsuitable material is removed and backfilled under Item 123. Muck Excavation, the excavation of the backfill shall be included under bridge excavation.

All other material encountered in the above noted construction, except that classified as Class B Rock Excavation and Muck Excavation as defined in these specifications, will be classified as Earth Excavation.

140.22: Class A Trench Excavation

Class A Trench Excavation shall include the removal and satisfactory disposal of all materials, except Class B Rock Excavation that are encountered in the construction or demolition of masonry culverts and other structures having a clear square span of less than 8 ft, masonry inlets, culvert ends, masonry walls, revetment, test pits, paved waterways, construction of drains for slope or subgrade stabilization and in the construction, widening, straightening or deepening of drainage ditches and water courses in connection with pipes or structures having a clear span of less than 8 ft.

Test pits to locate underground services shall be excavated where directed and will be classed as Class A Trench Excavation. The Contractor shall take special care during this excavation to avoid damage to any underground structures or utilities. When necessary the Contractor shall cooperate with representatives of public service companies in order to avoid damage to their structures by permitting them to erect suitable supports, props, shoring or other means of protection.

140.23: Class B Trench Excavation

Class B Trench Excavation shall include the removal and satisfactory disposal of all materials, except Class B Rock Excavation, encountered in the construction of drainage and water pipes greater than the 5-ft maximum depth specified in Section 200: Drainage.

Trench excavation for pipe laying in roadway cuts shall include only that portion of the trench which is below the roadway excavation except where the Engineer orders in writing, that the trench excavation and its backfill shall be completed before the roadway excavation is begun.

140.24: Channel Excavation

Channel Excavation shall include the removal and satisfactory disposal of all materials other than those classified as Bridge Excavation, Trench Excavation, Muck Excavation or Rock Excavation when encountered in the excavation for streams or rivers or excavation on new locations for same in connection with drainage structures having a clear span of 8 ft or more.

140.25: Class B Rock Excavation

This item shall include the removal and satisfactory disposal when encountered in the excavation for drainage structures, fences, highway guard, posts, bounds, pipes, ducts, walls, open trenches and bridge structures of:

(A) Boulders measuring 1 yd^3 or more and all solid rock that requires blasting or breaking by hand power tools (such as jackhammers etc.) prior to removal.
(B) Masonry removed from the walls, covers and other portions of existing drainage structures, also plain and reinforced concrete pavements, and masonry removed from bridge substructures.

Removal operations shall be so prosecuted that no damage will be caused to adjacent structures or property.

140.26: Drainage Structures Abandoned or Removed

The work shall consist of the removal and stacking of iron castings. The plugging of inlets and outlets and the filling of all drainage structures designated to be abandoned and the removal of all masonry and filling the cavity of the drainage structures designated to be removed

140.27: Test Pits for Exploration

Test pits shall be excavated where and as directed by the Engineer. The contractor shall take special care during the excavation to avoid damage to any existing structure or conduit. Hand excavation may be required to ensure no damage to surrounding utilities.

CONSTRUCTION METHODS

140.60: General

A. Sequence of Operations.

The Contractor shall prosecute their work so as to conform to the requirements of 120.60: General, Part A.

B. Disposal of Excavated Materials.

The Contractor shall prosecute their work so as to conform to the requirements of 120.60: General, Part B.

C. Cofferdams.

Cofferdams for foundation construction shall be carried to adequate depths and heights, shall be safely designed and as watertight as necessary for the proper performance of the work which must be done inside them. Sheeting shall be driven to a sufficient depth below the proposed foundation grade to permit reasonable change in depth of the proposed foundation to a maximum of 2 ft except where solid rock is encountered. The interior dimensions shall be sufficient for the unobstructed and satisfactory completion of such construction work as pile driving, form building, inspection and pumping. Cofferdams which become tilted or are displaced during the process of building the substructure shall be righted, reset or enlarged as may be necessary to provide the necessary clearances and this shall be at the sole expense of the Contractor. Cofferdams shall be unwatered and the proposed masonry footings placed in the dry.

Cofferdams shall be constructed so as to protect masonry against damage from a sudden rising of water and to prevent damage to the foundation by erosion. No part of the cofferdam shall be left in such a way as to extend into the substructure masonry, without written permission of the Engineer.

Upon request, the Contractor shall submit plans to the Engineer, for the Engineer's information, showing the Contractor's proposed method of cofferdam construction prior to the start of such construction. The furnishing of such plans and methods shall not serve to relieve the Contractor of any of their responsibility for the safety of the work or the responsibility for the successful completion of the project.

Where the plans indicate construction of a tremie concrete seal below the footing or if in the Engineer's opinion a tremie seal is necessary, the Engineer may require the placing of underwater concrete of such dimensions as necessary to safely dewater the foundations and place the footing concrete in the dry.

All tremie concrete seals shall be placed as shown on the plans or as directed by the Engineer.

Before placing the underwater concrete, the inside walls of the cofferdam shall be thoroughly cleaned and the walls made sufficiently tight to reduce the flow or current of water to less than 10 ft per minute. The elevation of the water inside the cofferdam shall be controlled during the placing and curing of the concrete. Concrete shall not be placed in water having a temperature below 35°F. No pumping of water shall be permitted while concrete is being placed nor until the concrete has cured a minimum of 24 hours. Once concreting has started the tremie shall not be moved laterally

through the deposited concrete. When necessary to move the tremie it shall be lifted out of the concrete and moved to the new position. Spacing of the tremies shall be at the Contractor's option.

After each excavation is completed, the Contractor shall notify the Engineer and no constructions shall be started until the Engineer has approved the depth of the excavation and the character of the foundation material.

All parts of the cofferdams shall be removed after the completion of the substructure, care being taken not to disturb or otherwise injure the finished masonry.

Sheet piling used in the construction of cofferdams may be left in place at the option of the Contractor, provided it is cut off at an elevation as may be directed by the Engineer, and the cutoff portions are removed from the site.

D. Excavation for Stepped Footings.

Where the footings for bridges are shown stepped, the Contractor shall sheet and shore the existing ground so that adjacent sections of the footings will rest on undisturbed ground according to the pattern shown on the plans. The sheeting shall be strong enough to support the earth along the designated lines, tight enough to restrain the fines in the concrete, and shall be left in place to the extent required to hold the concrete that is to be placed against it. Before the concrete is placed, the sheeting shall be cut so that none of the sheeting will extend into the concrete. Shoring and bracing shall be removed. If rock is encountered, it shall be stepped to the pattern shown and sheeting will not be required.

E. Water Control in Foundation Area.

When concrete for the foundations of a structure is to be placed in the dry, the Contractor shall use such equipment and perform their operations in such a manner that boiling or other disturbances of the ground in the foundation area will be prevented and shall keep the area being excavated dry by such means that will prevent the entering of water through or from the adjacent ground, if such entering water could affect the stability of the foundation material or the adjacent ground or the foundations.

No surface pumping will be allowed. Water shall be controlled by means of properly screened sumps or well points. If sumps are used, they shall be installed at strategic locations but not closer than 5 ft from the nearest edge of the footing.

The contractor shall provide temporary diversion channels, excavations, embankments, sheeting, drains, flumes, well point unwatering systems, pumps, or other effective procedures or structures together with all labor, materials and equipment necessary for unwatering the foundation areas. Such work shall be subject to the approval of the Engineer, but such approval will not relieve Contractor of responsibility for the adequacy of construction, maintenance, operation and safety of the water control system. Upon completion of the work all temporary embankments and structures shall be removed from the site. All temporary excavations shall be backfilled in accordance with the applicable provisions of Subsection 150: Embankment for forming embankments or as directed.

F. Shoring and Bracing of Trenches.

Shoring and bracing of trenches and other excavations shall be in accordance with all OSHA requirements.

G. Excavation.

Trenches for pipes, structural pipes, arches, and pipe arches shall be excavated to the required line and grade and of sufficient width to permit thorough tamping of backfill material under the haunches. Soft or unsuitable material existing below the required bedding grade shall be removed as directed and replaced with sand, gravel, crushed stone or other suitable material and thoroughly compacted. Rock or boulders shall be removed below the bedding grade as specified in 140.25: Class B Rock Excavation.

All materials excavated from pipe trenches and subdrain trenches and not used in the backfill of the trench will be used as part of the embankment, when deemed suitable for this purpose by the Engineer, and no deduction will be made from the in-place measurement of the embankment.

If cross pipes, conduits, drains or other unforeseen obstacles are encountered during the excavation, the proposed line and grade of the pipe may be altered, but only as directed by the Engineer.

When pipes, structural pipes, arches and pipe arches are to be installed in new embankments, the Contractor shall first construct and compact the embankment to an elevation at least 2 ft above the proposed flow line.

When culverts, storm drains or sewer pipes are to be installed in roadway areas on traveled ways, the edges of the trench through the pavement shall be cut to a neat line, using an approved pavement breaker or power saw.

140.61: Channel Excavation

The excavation shall be made and the bank sloped as shown on the plans or as directed.

The banks outside of the limits of a bridge structure shall be cut to a 2 to 1 slope. Within the limits of the bridge structure, the banks shall be cut to the slope required for revetment.

No waste or surplus excavation shall be left within 5 ft from the edge of the ditch or channel. Any such surplus or waste material shall be spread in a thin, uniform layer. All ditches and channels constructed on the project shall be maintained to the required cross section and shall be kept free from debris until final acceptance.

140.62: Class B Rock Excavation

If a rock is encountered in a location such that it may be used as a part of a base, footing, wing, or abutment of any structure, it shall not be removed. The surface of all rock or other hard material upon which masonry is to be placed shall be freed from all loose fragments, cleaned and cut to a firm surface. The surface shall be level, stepped or serrated, as directed by the Engineer.

All structures shall be founded on uniform bearing materials. If rock is encountered at portions of the bottom of the foundation for bridges, box culverts, structural plate pipe, structural plate pipe arches and end walls and wingwalls that are a part of these structures, the rock shall be removed to a minimum depth of 1 ft below the bottom of foundation for a depth of fill on the structure up to 25 ft. For fills over 25 ft the depth of excavation shall be increased 1 in. for every additional 2 ft of fill. The excavation shall be backfilled with gravel borrow and compacted. Payment for such excavation

will be made under the item for Class B Rock Excavation. Where wingwalls are not integral with the bridge or culvert the overdepth excavation will not be required.

140.63: Drainage Structures Abandoned or Removed

The present castings shall be carefully removed. They shall be satisfactorily stored and protected until they are required for use or until they are removed from the project by the owners.

Inlets and outlets of structures to be abandoned shall be plugged with masonry. The masonry plug shall conform to the requirements of Subsection 270: Pipes Removed and Relaid or Stacked. Upper portions of the masonry shall be removed to a depth of 3 ft below the finished grade at the location designated by the Engineer, and the structures shall be completely filled with selected excavated material placed in 6-in. layers and thoroughly compacted.

The existing masonry of structures to be removed shall be completely removed.

The cavity shall be completely filled with selected excavated materials placed in 6-in. layers and thoroughly compacted.

COMPENSATION

140.80: Method of Measurement

All classes of excavation for structures will be measured in their original position by the cross-section method except that where such measurement is impracticable the volume shall be measured by such other methods as the Engineer may determine. In calculating excavation for structures the sides of the excavation will be considered vertical.

Bridge Excavation shall be measured as follows:

The quantity of excavation shall be computed within the following limits:

Horizontally

To vertical planes 12 in. outside of and parallel to the neat lines of masonry bases or footings.

To vertical planes 18 in. outside of and parallel to the inside walls of structural plate pipes and arches (spans 8 ft or more and without masonry footings) at their widest dimensions.

To vertical limits of crushed stone or gravel borrow for bridge foundation as shown on the plans.

Vertically

From the bottom of the earth excavation limits of proposed roadway and/or design slopes carried through the structure location or existing ground surface, whichever is lower, to the bottom of the required excavation as determined by the Engineer.

In areas where unsuitable material is removed and backfilled under Item 123. Muck Excavation, excavation of the backfill will be measured horizontally and vertically as above except the upper limit of excavation shall be 2 ft above the swamp or 2 ft above any water that is present, whichever is higher.

Where masonry is ordered removed from existing substructures, only the actual quantity ordered removed shall be measured for payment.

Excavation made outside the lines prescribed for payment will be considered as made for the Contractor's convenience and will not be included for payment under any item of excavation, nor will the refilling of any such area be included under any item of filling material.

Class A Trench Excavation shall be measured as follows:

For masonry culverts (having a clear square span of less than 8 ft), inlets and walls, a width of 1 ft outside the base of the masonry section shown on the plans and to the depth required. Trench excavation for walls in cuts shall include only that portion below the elevation of the subgrade adjacent to the wall. For walls where an embankment is proposed, trench excavation shall be only that portion between the existing ground and the bottom of the foundation. All other Class A Trench Excavation will be measured according to the amount of materials removed to the lines and grades shown on the plans or as directed.

Class B Trench Excavation shall be measured as follows:

For pipe culverts, drains and water pipes the depth of excavation shall be measured from the bottom of the pipe barrel to the bottom of the roadway excavation or existing ground, whichever is lower, as determined above the center line of the pipe, less 5 ft. The width of excavation shall be 3 ft greater than the rated inside diameter of the pipe up to a point 5 ft above the bottom of the pipe barrel and a width above that point equivalent to the base width plus an allowance for 1 to 1 slopes on the sides of the trench for the measured depth described above. The allowance for 1 to 1 slopes will be included regardless of the actual slope excavated or whether sheeting or shoring is used that is not included for payment under Subsection 950: Sheeting. The sides of the trench excavation will be considered vertical when sheeting is used and paid for separately under Subsection 950: Sheeting and the width shall be 3 ft greater than the inside diameter of the pipe. If necessary to obtain a satisfactory foundation for pipe culverts, drains and water mains, trenches, shall be excavated deeper than normally required for bedding the pipe and such excavation below the barrel of the pipe will be measured for payment under this item. The width of trench shall be 3 ft greater than the rated inside diameter of the pipe and the depth shall be the actual depth as directed by the Engineer.

Class B Rock Excavation shall be measured as follows:

Pay limit for rock excavation actually removed in all masonry culverts, walls and bridges, will be up to a limit of 1 ft outside of the foundation. This rock excavation in cuts shall include only that portion below the limits of payment of Roadway Earth Excavation or Class A Rock Excavation and in embankment only that portion below the surface of the existing ground.

Pay limit for rock actually excavated in pipe trenches will be made to a width of 2 ft greater than the rated inside diameter of the pipe barrel, providing rock extends to· that width. The maximum depth of rock to be paid for shall be equal to the difference in depth between the top of the original rock in the trench and a line 12 in. below the bottom of the outside of the pipe barrel. No part of any rock remaining in the trench shall come within 6 in. of any portion of the pipe. Rock actually excavated in the construction of catch basins, manholes, and leaching basins will be calculated on a basis of 1 ft outside of the outer walls and 6 in. below the bottom of the structure. Rock excavation in subdrain trenches will be measured as specified above for pipe trenches.

Rock excavation in post and bound holes not already paid for in previous rock excavation shall be based on an area 2 ft^2 multiplied by the depth of rock encountered in the post or bound hole required plus 6 in.

Rock excavation in channel excavation will be measured as specified in 120.22: Class A Rock Excavation.

The unit of measurement for drainage structure abandoned or removed will be each structure abandoned for each structure removed, complete.

Test Pit for Exploration will be measured as the actual volume removed to the limits established by the Engineer.

140.81: Basis of Payment

Excavation for structures will be paid for at the contract unit price per cubic yard under the item for the particular type of excavation encountered.

The unit price per cubic yard shall include all backfilling when the materials are obtained from excavation, all clearing and grubbing (except as may be otherwise provided on the plans or in the Specifications), all excavations for the structure formation of embankments, disposal of surplus material, and the furnishing of all equipment, tools, labor and work incidental thereto.

If cofferdams, sheeting, shoring, bracing, unwatering system or other method of control for excavation are not specific items in the Contract, no allowance in addition to the prices bid for any items in the Contract will be made for such controls, or for labor, equipment or materials required. If any change in depth of foundation greater than 2 ft or in other dimensions of the foundation is directed by the Engineer after the controls have been provided, and if such change is greater than can be accommodated by the controls as constructed by the Contractor with the approval of the Engineer, then any changes made as directed by the Engineer will be paid for in accordance with the Contract provisions for Extra Work. Excavation, borrow, concrete or other items of work done within the controlled area will be paid for only at the contract prices for these items unless the operations require different or additional equipment or labor in addition to or different from that required for the original design of the control. If such different or additional equipment or labor is required to perform the operation for the pay unit of an item the additional costs will be paid for under Extra Work. Where salvage of material is involved in the additional work, the value of the salvage shall be deducted from the additional payment.

Backfilling when not obtained from excavation will be paid for at the contract unit price for the kind of material used.

Bridge Excavation will be paid for at the contract unit price per cubic yard under Item 140. Bridge Excavation. Bridge excavation within a cofferdam and included in the Proposal as a separate pay item will be paid under Item 140.1. Bridge Excavation within Cofferdam. All other excavation encountered in the construction of bridges, culverts (spans 8 ft or more) and major wall structures, not otherwise defined in these specifications will be classified and paid for as Earth Excavation.

Class A Trench Excavation will be paid for at the contract unit price per cubic yard of Class A Trench Excavation except that where the depth is greater than 8 ft, that excavation below the 8-ft depth will be paid for at a price per cubic yard equal to 1.5 times the price bid per cubic yard for Class A

Trench Excavation with the exception that no addition to unit bid price will be allowed for excavation of open ditches that may exceed 8 ft in depth for excavation required for the construction of revetment regardless of the depth.

Test Pit for Exploration shall be paid for at the contract unit price per cubic yard which price shall include excavation (including hand excavation) backfilling and compaction.

Class B Trench Excavation will be paid for at the contract unit price per cubic yard for Class B Trench Excavation.

Channel excavation (except rock) will be paid for at the contract unit price per cubic yard of Channel Excavation which price shall include full compensation for all handling, stacking or rehandling or excavated material.

Where channel excavation is made adjacent to a bridge or other structure the limits of pavement for channel excavation begin at the outer limits of payment for excavation for bridge or other structure.

Excavation for the placing of riprap in channel excavation areas where required will be included under the item of Channel Excavation.

Rock excavation (except in channel excavation) will be paid for at the contract unit price per cubic yard of Class B Rock Excavation. Class B Rock excavated within a cofferdam (constructed of lumber, wood or steel sheeting) will be paid for at 3 times the contract unit price per cubic yard of Class B Rock Excavation.

Rock excavation in channel excavation will be paid for at the contract unit price per cubic yard of Class A Rock Excavation.

Drainage Structures Abandoned and Drainage Structures Removed will be paid for at the contract unit price each. Masonry plugs shall be incidental to the work.

140.82: Payment Items

140.	Bridge Excavation	Cubic Yard
140.1	Bridge Excavation within Cofferdam	Cubic Yard
141.	Class A Trench Excavation	Cubic Yard
141.1	Test Pit for Exploration	Cubic Yard
142.	Class B Trench Excavation	Cubic Yard
143.	Channel Excavation	Cubic Yard
144.	Class B Rock Excavation	Cubic Yard
145.	Drainage Structure Abandoned	Each
146.	Drainage Structure Removed	Each

SUBSECTION 148: DREDGING

DESCRIPTION

148.20: General

Dredging shall consist of the removal and disposal of all materials within the limits shown on the plan, or as laid out in the field. Materials shall be removed to the depths shown on the plan. All dredged material will be classified as "Material, Dredged and Disposed," "Rock, Removed from Dredged Area and Disposed," and "Ledge, Removed from Dredged Area and Disposed."

The Contractor's attention is directed to the requirements of Section 7.00: Legal Relations and Responsibility to Public concerning Prevention of Water Pollution and Erosion.

148.21: Material, Dredged and Disposed

Material, Dredged and Disposed, shall consist of all material removed from the dredging area and placed in scows and disposed of where and as directed in the Special Provisions; not included are Rocks, Removed from Dredged Area and Disposed, and Ledge, Removed from Dredged Area and Disposed.

148.22: Material, Dredged and Disposed: Hydraulic Method

Material, Dredged and Disposed (Hydraulic Method), shall consist of all material removed from the dredging area and disposed of by Hydraulic dredging methods where and as described in the Special Provisions; not included are Rocks, Removed from Dredged Area and Disposed, and Ledge, Removed from Dredged Area and Disposed.

148.23: Rocks, Removed from Dredged Area and Disposed

Rocks in excess of 1 yd^3 in volume, and less than 5 yd^3 in volume, which are entirely removed from the dredged areas and deposited at a location approved by the Engineer, will be paid for under this item. No compensation will be made for rocks which are lowered so that they are below the depths of the proposed work.

148.24: Ledge, Removed from Dredged Area and Disposed

Ledge or Rocks (including masonry) in excess of 5 yd^3 in volume encountered within the dredging limits shall be removed and disposed of, upon the direction of the Engineer.

148.25: Mobilization and Demobilization

Mobilization and Demobilization shall consist of the mobilization of all the Contractor's dredging plant, including tugs, scows, pipe lines, pontoons, and all equipment at the site of the work prepared to commence dredging operations and upon completion of dredging operations the demobilization and removal of all aforesaid plant and equipment.

CONSTRUCTION METHODS

148.60: General

The material shall be removed by dredging plant and equipment either by the Hydraulic Method or by placing the material in scows and disposing of it outside of the dredging areas. The method(s) to be used will be specified in the Special Provisions.

If no area for the disposal of material is stated in the Special Provisions, it shall be the Contractor's responsibility for the negotiations necessary to furnish all required areas for disposal of material.

In the dredging and disposal of dredged material, the Contractor will be required to observe all laws of the United States, all requirements of the U.S. Corps of Engineers and all local or state authorities in relation thereto. The Contractor's attention is directed to the fact that material disposal of below mean high water requires a permit from the U.S. Corps of Engineers and a license from the Commonwealth.

The areas shown on the plans, or as laid out in the field, shall be dredged so that they shall have throughout upon completion of the work the specified depths over their whole extent as shown on the plans, with the banks at the sides sloped at an angle of approximately 1 vertical to 3 horizontal. The Contractor shall make the bottom of the dredged areas as smooth and level as possible to or slightly below the required depths.

The Contractor shall exercise extreme caution in any location in which the dredging operations are in close proximity to structures. The Contractor shall bear full responsibility for damage of any nature to structures caused by dredging beyond the limits shown on the plan or as laid out in the field and such damage shall be satisfactorily remedied at the sole expense of the Contractor.

The Contractor shall conduct their dredging and disposal operations so as to cause a minimum of interference with navigation.

The Contractor shall furnish regularly to inspectors on board the dredge or other craft upon which they are employed, when transportation ashore is impracticable, a suitable room for office and sleeping purposes. The room shall be properly heated, ventilated and lighted and shall have a desk which can be locked, a comfortable bed and chair for each Inspector, and washing conveniences. If such quarters and conveniences are not provided, or the work is so located that transportation ashore can be furnished without interference with the work, the Contractor shall provide the Inspector with transportation to and from such points ashore as the Engineer may from time to time, designate.

If the Contractor maintains on their work an establishment for the subsistence of their own employees, the Contractor shall furnish to Inspectors and survey parties when employed on the work, meals of satisfactory quality.

Each Bidder shall state in their Proposal whether the plant the Bidder proposed to use on the work has facilities for furnishing the meals and accommodations required.

The entire cost to the Contractor for furnishing, equipping and maintaining the foregoing accommodations, providing transportation ashore, and furnishing meals, shall be included in the price bid for dredging.

COMPENSATION

148.80: Method of Measurement

The amount of material dredged and disposed of will be determined by preliminary and final cross sections taken by the Engineer in the dredging area. If this method is impracticable, the Engineer will determine the method of measurement.

If the alternate method of measurement is by measuring the dredging materials in the scows in which it is placed for disposal, such actual scow quantities as determined by the measurements shall be divided by 1.15 to compensate for bulking or swelling. The quotient for this division shall then be the quantity to be paid for.

The quantity of materials shown in the Proposal has been computed to the payment limits.

The Engineer may take additional soundings before the work is started, which soundings shall be the preliminary soundings for payment purposes.

Pay limits for material actually dredged and disposed will be as follows:

A. Bottom – Depth up to and including 24 ft below mean low water plus 1 ft below the required depths. Depths more than 24 ft below mean low water plus 2 ft below the required depths.
B. Side slopes shall be as shown on the plans.

Rocks. Removed from Dredged areas and Disposed will be determined by measurement made by the Engineer.

Ledge. Removed from Dredged Areas and Disposed will be determined by preliminary and final cross sections taken by the Engineer in the dredging area. The overlying material shall be removed prior to the Engineer taking preliminary cross sections. If this method of measurement is impracticable, the Engineer will determine the method of measurement.

Mobilization and Demobilization will be paid for at the contract lump sum price. The Contractor will be paid sixty percent of the lump sum price upon completion of their mobilization at the work site. The remaining forty percent will be included in the final payment for work under the Contract.

148.81: Basis of Payment

All classes of dredged material will be paid for at the contract unit price per cubic yard for the particular type of material removed and disposed as defined hereinbefore.

148.82: Payment Items

148.	Dredging and Disposing of Material	Cubic Yard
148.1	Dredging and Disposing of Material (Hydraulic Method)	Cubic Yard
148.2	Removal and Disposal of Rock from Dredged Areas	Cubic Yard
148.3	Removal and Disposal of Ledge from Dredged Areas	Cubic Yard
148.4	Dredging, Mobilization and Demobilization	Lump Sum

SUBSECTION 150: EMBANKMENT

DESCRIPTION

150.20: General

Construction of all embankment fill shall be done in accordance with the relevant provisions of Subsection 120: Excavation, Subsection 150: Embankment, and Subsection 170: Grading, and in accordance with the procedures described herein.

This work comprises the formation of embankments with suitable material obtained from excavation and borrow, thoroughly compacted to produce a stabilized embankment. The work shall be performed in accordance with the lines and grades shown on the plans as directed.

Material available from widened cuts outside the slopes as indicated on the plans or as ordered by the Engineer may be used in embankments or elsewhere upon written request by the Contractor and subsequent written approval by the Engineer. The Engineer shall determine the suitability of any excavation material for incorporation in the embankment.

If the Contractor desires to waste excavated material and provide borrow to replace it for their own convenience, they may do so only after obtaining the written approval of the Engineer and after satisfactory arrangements have been made for the measurements and disposal of the material.

When it is determined by the Engineer that there is not sufficient material available either from excavation within the Right-of-Way or the slope lines of the section under Contract for the formation of embankments, roadbeds in cut sections, foundations, shoulders, or backfill the Contractor shall obtain such additional material as may be necessary from outside the location, and this material will be borrow material.

150.21: Borrow Pit Restrictions

With the exception of commercial borrow pits, the location, material removal operation and final shaping and finishing of borrow pits, regardless of location, must conform with all local and State regulations, and for the purpose of preventing water pollution shall be subject to approval by the Engineer prior to use, during the material removal operation and upon completion. Borrow pits shall be so graded and finished after material removal is completed that there can be no reasonable possibility of a safety hazard nor ponding of water nor water pollution caused by later erosion of the pit.

Borrow pits located adjacent to the Right-of-Way shall be finished by extending the slope of the cross section to a berm to be constructed or left within the Right-of-Way at the side line. The berm shall be a minimum of 5 ft high and 2 ft wide across the top with natural slopes in both directions, or as otherwise directed. The floor of the pit shall slope away from the location line at a minimum rate of 0.5 in. per ft for at least 50 ft.

Portions of borrow pits (within 500 ft of the project or any other highway location line) which may be noticeable from a travelled way, residence or place of business, shall be neatly trimmed and left in a condition satisfactory to the Engineer. Particular attention shall be given to make the slopes harmonize with the general appearance of the adjacent landscape, provided however, that no slope

shall be steep enough to constitute a public menace. No unsightly accumulation of material shall be permitted which may in any manner deface the finished landscape.

The cost for the final shaping and finishing of borrow pits shall be included in the contract unit price of the type of borrow furnished with no additional compensation.

MATERIALS

150.40: General

All embankment material, whether coming from excavation or borrow shall consist of solid, sound mineral aggregate. It shall be free from deleterious, organic, elastic or foreign matter and shall be adequately graded for satisfactory compaction into a stabilized soil structure.

The material will be classified into particular groups according to AASHTO M 145.

All borrow material to be furnished shall meet the requirements specified in the following Subsections of Division III, Materials:

Ordinary Borrow.....M1.01.0
Gravel Borrow.....M1.03.0
Sand Borrow.....M1.04.0 Type b
Gravel Borrow for Bridge Foundation.....M1.03.0 Type a
Special Borrow.....M1.02.0
Impervious Soil Borrow.....M1.08.0
Reclaimed Pavement Borrow Material.....M1.09.0
Crushed Stone.....M2.01.0

Reclaimed Pavement Borrow Material meeting M1.09.0: Reclaimed Pavement Borrow Material may be substituted with approval of the Engineer for Ordinary Borrow, Special Borrow or Gravel Borrow. Reclaimed pavement borrow, if substituted, shall only be used under pavement areas and sidewalks.

CONSTRUCTION METHODS

150.60: General

Prior to starting work, the Contractor shall obtain approval for the compaction equipment to be used. Each layer of embankment material shall be thoroughly compacted with power rollers or tamping rollers. Other equipment or equivalent compactive capacity may be used subject to trial on the project and approval by the Engineer. Compacting equipment will not be used for any other purpose during compaction operations.

The use of tractors, trucks, scrapers or other equipment designed primarily for purposes other than compaction and being used for purposes other than solely compaction will not be considered as compaction equipment, but traffic of such vehicles shall be distributed over this fill in such a manner as to take advantage of the additional compaction afforded thereby.

Sufficient levelling and compacting equipment shall be provided to do the work of spreading and compacting the material promptly after it has been deposited. When, in the Engineer's judgment, such equipment is inadequate to spread and compact the material properly, the Contractor shall

reduce the rate of excavation and placing of the fill to a rate not to exceed the capacity of the leveling and compacting equipment or employ additional equipment.

The Contractor shall plan their grading operation to use all rock possible from all excavation either as backfill in excavated muck areas or in areas of greatest depth.

Before placing of any fill, the areas under embankments shall be cleared, grubbed, and stripped as specified in Subsection 101: Clearing and Grubbing and Subsection 120: Excavation.

Frozen material shall not be placed on embankments nor shall embankment be placed on material frozen to a depth of over 3 in. If during the construction of an embankment, the top layer becomes frozen to a depth of over 3 in., the frozen material shall be removed before a succeeding layer is placed on the embankment. This work shall be performed at no additional expense to the Department.

Frozen excavated material which will be suitable when dry shall be allowed to thaw and dry and then be placed in the embankment. No compensation will be allowed for the storing and rehandling of these materials.

Embankments shall be formed by placing successive layers of material uniformly distributed and compacted over the full width of the cross section. Stumps. rubbish. sod. frozen or other unsuitable materials shall not be incorporated in the embankment.

The Contractor shall prosecute bis work so that no damage will occur to drainage pipe lines or masonry or brick structures (See 150.64: Backfilling for Structures and Pipes).

150.61: Preparation of Foundation Areas

The foundation areas shall be cleared, grubbed and stripped as required, and all soft, spongy or other material unsuitable for embankment foundation shall be removed. When, in the Engineer's judgment, there is reasonable doubt as to the suitability of the existing material for embankment foundation, no further work shall be performed in the area in question until the material is tested and approved for use or remedial methods are ordered by the Engineer.

Embankment areas 3 ft or less in height from the subgrade to the existing ground shall be rough graded and compacted to not less than 95 percent of the maximum dry density of the material as determined by the AASHTO Standard Method of Test T 99, Method C at optimum moisture content, as determined by the Engineer, without additional compensation before placing any fill. If the material retained on the #4 sieves is 50% or more of the total sample this test shall not apply and the material shall be compacted to the satisfaction of the Engineer.

For embankments greater in height than 3 ft below the proposed subgrade to existing ground no additional embankment foundation area preparation will be required, provided the material within the area is suitable for the purpose.

Regardless of the height of fill, where embankment is to be placed against existing earth slopes. steeper than 3 to 1, the slope shall be broken up into steps of random width as the fill is placed in order to provide a suitable bond between the existing ground and the new embankment. Both the material cut out and the bottom of the area cut into shall be compacted along with and to the same degree as the material being placed in the embankment without additional compensation for excavation, benching or compacting.

Where foundations for bridges, culverts (span 8 ft or more) and major wall structures are to be founded on the embankment, the embankment to the extent shown on the plans shall be constructed of Gravel Borrow for Bridge Foundations and/or Crushed Stone for Bridge Foundations.

At the sites of footings for abutments, piers or other structures having pile foundations, the material shall be placed in embankment prior to driving piles and shall be of a quality and grading that will not obstruct driving of the piles.

Where foundations for structures are to be supported on newly formed embankments and where flying wingwalls are to be constructed, the embankment shall be placed to an elevation of at least 2 ft above the bottom of the proposed foundation or flying wingwalls and thoroughly and satisfactorily compacted.

After the above work is completed the material within the area of the proposed foundation or flying wing-walls will be excavated to the grade of the bottom of the concrete. Excavation of this compacted fill will be paid for under the item of Bridge Excavation as stipulated in 140.21: Bridge Excavation.

150.62: Embankment Construction with Materials Other Than Rock

Embankment construction with materials other than rock shall not be placed from December 1 to April 1, except with written permission of and under such special conditions and restrictions as may be imposed by the Engineer.

Embankment 10 ft or more in height from the elevation of the subgrade to the original ground elevation shall be constructed to the elevation of the proposed subgrade and then allowed to settle for 60 days (or such other period as the Engineer shall direct in writing) before the pavement structure is constructed thereon. If the condition of the subgrade is suitable, not frozen or muddy and is shaped, compacted and fine graded within the tolerance provided in the Specification, the Contractor may apply and the Engineer may approve the placing but not the fine grading of the subbase prior to the termination of the 60 day waiting period.

Earth embankment shall be placed and compacted in uniform layers not exceeding 12 in. in depth, loose measurement; each layer of material shall be spread on the entire width of the embankment and levelled off by approved equipment.

The embankment materials shall be compacted to not less than 95% of the maximum dry density of the embankment material as determined by AASHTO Standard Method of Test T 99, Method C. If required, a correction for oversized particles shall be in accordance with Annex A of AASHTO T 99. If the material retained on the ¾-in. sieve is 30% or more of the total sample, this test shall not apply and the material shall be compacted to the target density. The target density shall be established by determining the number of passes of a roller required to produce a constant and uniform density, after conducting a series of tests using either AASHTO T 310, *In-Place Density and Moisture Content of Soil and Soil-Aggregate by Nuclear Methods (Shallow Depth)*, or AASHTO T 191, *Density of Soil In-Place by the Sand-Cone Method*. The Contractor shall, without additional compensation, employ whatever measures may be necessary to adjust the natural water content of the suitable embankment material to permit the placement and compaction as hereinbefore specified.

Each lift of compacted materials shall be visibly crowned to allow drainage of surface and rain waters off the surface of the embankment. No stones larger than 3 in. shall be used to fill where piles are to be driven. Embankment constructed in basement areas of demolished buildings and other areas restricting the use of power rollers, etc., shall be compacted by mechanical tamping with approved power tools.

If the natural-in-place moisture of the excavated material makes it impractical to compact the soil, the Contractor shall dry the soil by disking, harrowing, blading, rotary mixing or by other approved means, or compaction of the layer of wet material may be deferred until the layer has dried so that it can be properly compacted. If these above methods do not produce the desired results, or when in the judgment of the Engineer, excess moisture resulting from climatic conditions beyond the control of the Contractor is considered to have affected adversely the stability of the previously placed and satisfactorily compacted embankment materials, the Engineer may direct the placement of single layers of "Special Borrow" to act as stabilizing drainage layers. When so ordered by the Engineer, the Contractor shall place a layer of "Special Borrow" having a depth of not more than 12 in. in thickness, loose measure. Such materials shall be placed completely over the entire width between the limits designated by the Engineer and shall be compacted as hereinafter specified before the succeeding layer of suitable embankment materials from the roadway excavation is placed.

The work may be ordered suspended if the weather and climactic conditions are such that the embankment and excavation cannot be performed in accordance with the specifications. No additional compensation will be allowed to the Contractor for such suspension of work. If the work is ordered suspended due to weather or other climatic conditions not under the control of the Contractor, an extension of time may be granted to the Contractor by the Engineer.

150.63: Rock in Embankment

Where rock is used in embankments the materials shall be carefully spread so that all large stones shall be well distributed and the interstices of each layer shall be practically filled with smaller stones and suitable material from excavation or borrow to form a solid and dense layer of embankment. No rock in excess of 6 in. in its largest dimension shall be incorporated in the top 2-ft layer of embankment immediately below the subgrade. The maximum size of boulders or ledge fragments used in embankments shall be such that they can be incorporated into layers not exceeding 3 ft in depth. Any stones or fragmented material too large to be placed in 3-ft layers shall be broken down by blasting or other means to appropriate size.

Rock in fills shall not be placed adjacent to masonry or brick structures or to any pipe lines. At bridge abutments rock fill shall not be placed within 20 ft of the parapet.

150.64: Backfilling for Structures and Pipes

A. General.

All backfilling shall consist of suitable materials uniformly distributed and thoroughly compacted. When suitable backfilling materials cannot be obtained from excavation, the material shall consist of satisfactory borrow.

When directed, mechanical tampers shall be used in compacting backfill for trenches, and in hard to reach areas around masonry.

No backfill whatever shall be placed on or against structures, pipes, or other masonry, until permitted by the Engineer. It shall be formed of successive layers not more than 6 in. in depth, uniformly distributed and each layer thoroughly compacted.

B. Structures.

The backfill in back of abutments and wingwalls of bridges shall consist of gravel. The gravel shall meet the specifications of M1.03.0: Gravel Borrow, Type b. Measurement of "Gravel Borrow" under this work will not include any filling made beyond a vertical plane 1 ft outside the footings except as directed.

Whenever backfill is placed in back of or over arches, culverts or rigid frames, the fill shall be first placed midway between the ends of the structure. The remainder of the fill shall then be placed to equal depths on both sides of the structure, working equally both ways from the center of the structure toward the ends. This procedure shall continue up to the bottom of the subbase of the roadway.

C. Pipes.

No load greater than 8 tons shall be moved over any pipe until a fully compacted backfill of at least 2 ft has been placed over the top of the pipe. This minimum will be increased to 3.5 ft for a 40,000 lb single wheel load and to 4 ft for a 60,000 lb single wheel load. The required fully compacted backfill cover shall be placed a minimum of 50 ft on both sides of the pipe crossing. However, compliance with this requirement is not to be construed as relieving the Contractor of any responsibility concerning damage to the pipe.

Material used for backfilling to a point 2 ft over the pipe shall contain no stones larger than 3 in. in greatest dimension, except material used to backfill corrugated plastic pipe shall consist of gravel borrow meeting the requirements of M1.03.0: Gravel Borrow, Type d, to a depth of 2 ft over the top of pipe.

Backfill below the haunches shall be placed in 6-in. layers and compacted simultaneously on both sides of the pipe with railroad tampers or approved mechanical rammers which shall not come in contact with the pipe. Backfill above the haunches shall be placed in 6-in. layers and compacted as directed. Backfill material shall be moist prior to and during compaction.

Backfilling for structural plate pipe, pipe-arches and arches shall be placed evenly on both sides of the structure in layers not exceeding 6 in. in depth. Backfilling shall be placed uniformly on both sides of pipe. The fill material shall be thoroughly tamped around the pipe or pipe-arch, between the pipe or pipe-arch and the sides of the trench, or for a minimum distance each side of the pipe or pipe-arch equal to the diameter or span of the structure.

In all cases the filling material shall be thoroughly tamped. Puddling or jetting the backfill will not be permitted, except with written approval of the Engineer.

150.65: Backfilling Muck Excavation Areas

Backfilling after muck is removed shall consist of rock fragments, boulders up to 2 yd^3 in size, if available, or selected clean granular material not more than 15% of which pass through a #200 sieve as determined by AASHTO T 11. The backfill shall be obtained from suitable excavation on the project, or from Special Borrow under Item 150.1. When rock is used as backfill, granular material

meeting the specifications described above shall also be provided and used with the rock backfill. The volume of the granular material shall be sufficient to fill all voids and interstices of the rock backfill.

Where directed, backfilling shall be placed immediately after the muck has been excavated in order that any remaining soft material may be pushed ahead of the backfill and readily removed.

The backfill shall be placed at least 2 ft above the top of the swamp area or at least 2 ft above the level of any water that is present whichever will give the highest elevation of backfill.

The surface of the embankment shall be kept free of unsuitable material. No muck or unsuitable material shall be entrapped by any successive deposits of fill.

150.66: Gravel Borrow for Bridge Foundations

The gravel shall be placed on firm material free from standing water and thoroughly compacted in layers not exceeding 12 in. in depth, loose measurement, in accordance with the provisions of 150.62: Embankment Construction with Materials Other Than Rock to a minimum total depth of 2 ft, except the compacted gravel as tested in the field shall be not less than 95% of the laboratory maximum dry density as determined by AASHTO T 180 Method D. If required, a correction for oversized particles shall be in accordance with Annex A of AASHTO T 180.

In areas where it is not practicable to compact the gravel for bridge foundations by rollers or other rolling moving equipment the compaction shall be accomplished by means of mechanical or pneumatic tampers.

Compaction of the gravel and any adjoining embankment material shall be done simultaneously so that the respective materials will be confined substantially to the indicated lines.

150.67: Crushed Stone for Bridge Foundation

Crushed stone shall be furnished and placed where shown on the plans and where directed by the Engineer.

In no case shall crushed stone be placed on other than firm material.

The crushed stone shall be placed to an elevation 1 ft above ground water level or lowered water level.

The entire mass of crushed stone shall be compacted into place by overlapping coverage by pneumatic tired earth rollers having 4 wheels abreast and loaded, vibratory plate type compactors, vibratory rollers or by other means that shall achieve equivalent compaction and are approved by the Engineer.

The compaction operation shall be continued until there is no moving stone directly ahead of the wheels of the moving machine.

150.68: Crushed Stone

Crushed stone shall meet the Division III Materials specification for the intended application as follows:

Noise Barrier M2.01.2
Pipe bedding M2.01.4
Revetment foundations M2.01.2

The minimum total depth of crushed stone to be placed under this item of work shall be 6 in. No compaction will be required for depth up to 1 ft. For any depth over 1 ft, the crushed stone shall be placed and compacted in layers not to exceed 6 in. Compaction will be accomplished by means of mechanical or pneumatic tampers. Compaction effects shall continue until the stones are firmly interlocked and the surface is unyielding.

COMPENSATION

150.80: Method of Measurement

All borrow with the exception of sand borrow and crushed stone will be measured in place. When this method of measurement is impracticable and the Engineer, prior to the start of construction, so directs and the Contractor agrees in writing, borrow, with the exception of sand borrow and crushed stone, will be measured in its original position in the pit after stripping by the cross-section method.

When ordinary borrow is paid for as measured in place, it shall be measured from existing or compacted old ground surface to the lines and grades applicable to embankment as shown on the plans or as directed.

The volume of ordinary and special borrow when in place measure is necessary, shall be determined as follows:

1. Measure the total volume of embankment in place;
2. Add 12.5 percent of this quantity (for compaction);
3. Deduct the total volume of all suitable materials available for embankments, including rock excavation; except that excavated under 140.60: General;
4. Deduct an additional 25 percent of the volume of rock excavation.

When not measured in its original position in the pit by the cross-section method, gravel borrow used in subbase, gravel for base course, gravel for surfacing, gravel for bridge foundations and gravel for backfilling around structures and pipes, will be paid for as measured in place plus 15%.

When not measured in its original position in the pit by cross section method gravel borrow used in slope stabilization and other miscellaneous uses will be paid as measured in place plus 12.5%.

If material that is measured in place is taken from a cross sectioned pit, the amount of material to be deducted from the cross-section pit quantity shall be equal to the material measured in place plus any allowable percent added to the in-place measurement.

Sand borrow will be measured by the cubic yard by load measurement. The quantity shall be the volume of the load, as measured, divided by 1.15.

If stone screenings are used the volume shall be obtained from its weight using 2,700 lb as the weight of 1 yd^3 of stone screenings.

Crushed stone complete in place will be measured by the ton.

The weight slips shall be countersigned on delivery by the Engineer, and no weight slip not so countersigned shall be included for any payment under the Contract.

No overhaul allowance will be made for any kind of borrow.

150.81: Basis of Payment

Payment for the formation of embankments as specified will be included in the items of excavation or borrow. Excavated material used with the permission of the Engineer for other than the formation of embankments will be paid for as specified in 120.81: Basis of Payment and such payment shall include full compensation for the formation of the required embankments. The contact unit prices for the aforesaid items shall constitute full compensation for the satisfactory performance and completion of the entire work.

Borrow will be paid for at the contract unit price per cubic yard, complete in place, which shall include such test pits and borings necessary to procure samples to establish the suitability of the materials and all required stripping operations.

Crushed stone will be paid for at the contract unit price per ton, complete in place.

150.82: Payment Items

150.	Ordinary Borrow	Cubic Yard
150.1	Special Borrow	Cubic Yard
151.	Gravel Borrow	Cubic Yard
151.01	Gravel Borrow – Type c	Cubic Yard
151.1	Gravel Borrow for Bridge Foundation	Cubic Yard
151.2	Gravel Borrow for Backfilling Structures and Pipes	Cubic Yard
154.	Sand Borrow	Cubic Yard
156.	Crushed Stone	Ton

SUBSECTION 170: GRADING

DESCRIPTION

170.20: General

The shaping, trimming, compacting and finishing of the subgrade, the grading and finishing of all unpaved shoulders and slopes and the preparation of all areas for topsoil, loam, riprap or slope paving as shown on the plans or as directed, shall be constructed in accordance with these specifications and in close conformance with the lines, grades and typical cross sections shown on the plans or established by the Engineer.

CONSTRUCTION METHODS

170.60: General

All soft or spongy material below the subgrade shall be removed to a depth to be determined by the Engineer and backfilled with satisfactory material.

All material within a depth of 2 ft below the subgrade in embankment areas shall conform to the requirements of M1.02.0: Special Borrow for Special Borrow Material except that it shall contain no stone larger than 6 in. in its greatest dimension and shall be placed and compacted in layers not exceeding 8 in. in depth, compacted measurement.

In cut sections (excluding rock excavation) where existing soil within a depth of 2 ft below the subgrade, after testing, is found to comply with the requirements of M1.02.0: Special Borrow for Special Borrow Material, it shall not be excavated.

In cut sections (excluding rock excavation) where the existing soil within a depth of 2 ft below the subgrade, after testing for gradation requirements, is found to have greater than 14% material passing the no. 200 sieve, the material shall be excavated.

The replacing material shall conform to the requirements of M1.02.0: Special Borrow for Special Borrow Material, except that it shall contain no stone larger than 6 in. in its greatest dimension and shall be placed in layers not exceeding 8 in. in depth, compacted measurement.

In the areas described above where Special Borrow is to be used, the plane of the base upon which the material is to be placed shall be compacted and graded until the surface is smooth, without additional compensation. A tolerance of 1 in. above or below the proposed grade will be allowed, provided that this 1 in. above or below grade is not maintained for a distance longer than 50 ft and that the required crown is maintained.

In areas where the contract specifies the use of gravel borrow for subbase and the existing material, after testing, is found to comply with the requirements of M1.03.0: Gravel Borrow, the material shall remain in place if directed by the Engineer.

170.61: Fine Grading and Compacting

The subgrade shall be shaped to a true surface conforming to the proposed cross section of the highway and compacted in accordance with the provisions of 150.60: General and 150.62: Embankment Construction with Materials Other Than Rock. All depressions and high spots shall be filled with suitable material or removed, and such areas again compacted until the surface is smooth and satisfactorily compacted. A tolerance of ½ in. above or below the finished subgrade will be allowed provided that this ½ in. above or below grade is not maintained for a distance longer than 50 ft and that the required crown is maintained in the subgrade. Any portion of the subgrade which is not accessible to a roller shall be thoroughly compacted with the mechanical tampers or by other adequate methods approved as satisfactory by the Engineer.

COMPENSATION

170.80 Method of Measurement

The grading and compaction of the subgrade will be measured by the square yard. Grading and finishing for the entire project will include all grading work not included under Item 170. Fine Grading and Compacting – Subgrade Area.

170.81: Basis of Payment

Payment for the shaping and compacting of the subgrade shall be included in Item 170. Fine Grading and Compacting – Subgrade Area. The removal and disposal of material below subgrade will be paid for at the contract unit price per cubic yard for the appropriate excavation items in Subsection 120: Excavation.

Grading and finishing other than subgrade areas or existing gravel areas to remain in place will be included in the price of the other respective items of work involved.

In areas where Special Borrow is required as stipulated in 170.60: General, the material shall be paid for as Special Borrow. The provisions of 120.81: Basis of Payment shall apply when the Special Borrow is obtained from excavation.

In areas where Gravel Borrow material is required as stipulated in 170.60: General, the material shall be paid for as Gravel Borrow.

170.82: Payment Items

170. Fine Grading and Compacting – Subgrade Areas.....Square Yard

SUBSECTION 190: BORINGS

DESCRIPTION

190.20: General

This work shall consist of making soil-test borings, obtaining and preserving acceptable samples, preparing a report of the results obtained and delivery of the report and samples.

The Engineer will establish the location and provide the ground surface elevation for each boring. No change in boring locations shall be made unless prior consent of the Engineer is obtained. The Contractor shall complete the borings to the specified highest bottom elevations or as directed. The actual location at which each boring is made shall be shown on the plans and the actual starting grade shown on the boring log.

The Contractor shall confine their operation as closely as possible to each location where work is to be performed. The Contractor shall take precautions necessary to prevent damage to existing structures and conduits both above and below ground, and to lawns, walks and pavements.

When the work at each borehole is completed, the hole shall be adequately blocked and solidly filled to a depth of at least 5 ft in a manner to preclude any possibility of injury to man or animal, or

damage to property. Special Provisions for backfilling boreholes on railroad property may also be employed in accordance with railroad requirements.

Boreholes within the limits of travel ways, shoulders, sidewalks and paved areas shall be backfilled and compacted with granular materials and brought to the grade of the adjacent surface with a minimum of 6" of hot mix asphalt or cement concrete, whichever is applicable.

The Department reserves the right, at any time during the life of the Contract, to determine the order in which remaining borings are to be taken and reserves the right to eliminate borings from, or to add borings to those shown on the plans and the right to increase or decrease the depth of any and/or all borings.

The Contractor shall be responsible for any claims resulting from damage to underground pipes, conduits, and structures. It is suggested that possible damage to such utilities can be minimized or eliminated by hand augering the first several ft of each borehole. The Contractor's attention is called to Subsection 7.13: Protection and Restoration of Property regarding Protection and Restoration of Property.

190.21: Borings, Samples and Reports

All Borings including Trial Borings, Auger Borings, Wellpoints, Probes and Test Pits shall require boring logs and/or records. Three copies of the final boring logs, one vellum and 2 paper copies, and 2 diskettes of the electronic files in AutoCAD® compatible format shall be submitted to the MassDOT Geotechnical Engineer within 10 calendar days after completion of the last boring at each site. Abbreviations shall not be used on the final printed logs.

Boring samples, packaged, packed and labeled as required and described hereinafter under each type of boring and sample, shall be delivered at the time the boring logs are submitted, transportation prepaid, to the MassDOT Geotechnical Engineer.

A supply of Boring Record Cards for Department projects may be obtained upon request from the MassDOT Geotechnical Engineer to be glued on both ends of each cardboard sample box.

Where Borings are specified, a legible copy of the Driller's field log shall be forwarded to the MassDOT Geotechnical Engineer the day after the Boring work at each site is completed.

The original drillers field log (copy) will be submitted to the MassDOT Geotechnical Engineer with the Driller's field description unaltered. Should the Contractor's Office Engineer or Geologist after review find it necessary to change a description it shall be done on a separate copy of the field log, dated, signed, and clipped to the original Driller's log. Copies of these logs shall be sent to the MassDOT Geotechnical Engineer no later than one day after the completion of each borehole.

190.22: Supervision

The work shall be performed under the supervision of the authorized representative of the Engineer. No subsurface exploratory work shall be done in the absence of the Engineer.

The Contractor shall furnish the means and the men required to transport safely the Engineer to and from high ground and the position of borings located on water, in a swamp, or other surface conditions over which it is impossible or difficult to travel on foot.

The Contractor shall notify the Engineer not less than 48 hours in advance of when they intend to commence work at a particular job site or when they intend to increase or decrease the number of rigs on a project in order that the Engineer may have time to provide a proper number of inspectors for the project.

190.23: Driller Qualification

The driller of each boring crew shall be responsible for determining changes in the soil. The driller shall be experienced in detecting variations in the soil by changes in the feel and sound of the hollow rod to which the bit is attached. The driller shall also be competent to classify the recovered soil samples in accordance with the Department's Visual Identification of Soils Table (copies may be obtained from the Engineer).

Before beginning on the Department's work, the Contractor shall certify in writing to the Engineer, the name of each driller they propose to use. The driller shall be qualified as acceptable to the Engineer by exhibiting satisfactory abilities using the methods defined herein.

Once qualified a driller need not be requalified for subsequent projects, although approval must be obtained for their employment on each Contract. The Engineer reserves the right to determine the acceptability of the driller at any time during the prosecution of the work. The Contractor shall designate a field supervisor on each Project.

DRILLING METHODS

190.60: General

A. Starting Boring

Every boring shall start as a Drive Sample Boring, except Hollow Stem Auger, Auger, Undisturbed Sample Preparatory, and Vane Shear Test Preparatory Borings.

Where the resistance to penetration with earth boring tools, as defined herein by “Practical Refusal” (Paragraph F.), is encountered above the specified highest bottom elevation, the borehole nevertheless shall be made to said elevation. Should bedrock be encountered above the specified highest bottom elevation, the borehole shall be continued as a rock core boring for a minimum of 10 ft.

B. Casing

Casing shall be of a size that will permit the specified soil sample or rock core to be obtained, or groundwater observation well to be installed, or to allow for telescoping and spinning of casing. All pieces of casing and wash-pipe shall be equal in length. Casing may be driven into the ground only so far as is necessary to keep the wall of the borehole in place and then open hole techniques may be employed. However if the Contractor so elects, casing may be used throughout the borehole as required. Casing for rock core borings shall be sealed on bedrock to prevent loose material from entering the hole and to prevent the loss of drilling fluid return, regardless of the type or types of material encountered. Except for the first piece, when starting each borehole, the bottom of the casing should not be advanced below the bottom of the borehole that has been made with a chopping or drilling bit without the approval of the Engineer.

C. Making the Borehole

Independent of whether casing or open hole techniques are employed, the borehole shall be started and made by loosening the soil with a bit attached to the lower end of a hollow rod and given a chopping motion with a clockwise twist at the bottom of each stroke. An auger, either hand or power driven, a well-drill or a rotary drill shall not be used for advancing the borehole in less than "Dense" or "Very Dense" or "Practical Refusal" soil. However, when casing is used a rotary bit may be used to clean the casing. A sampler shall not be used instead of a chopping or drilling bit for making a borehole. To make a borehole through "Dense," "Very Dense" or "Practical Refusal" soil, boulders, rockfill or other similar material the Contractor may employ whatever method they choose, including roller bits, telescoping and spinning of a casing without endangering life and property or affecting the purpose for which the boring is being made. The Contractor shall not use a backhoe or other earth moving equipment without the express approval of the Engineer to start a boring. The soil thus loosened shall be borne to the surface in a liquid which is forced down through the hollow rod, out through the discharge ports in the bit, and up the annular space between the hollow rod and the wall of the borehole and/or casing. Except when preparing the borehole for special sampling, the discharge ports shall direct the flow downward. The returning liquid shall be discharged into a settling basin and shall be reused (recirculated) to form a native mud. Water alone, for transporting the loosened soil, shall not be used except at the very beginning of each borehole. If a contractor elects to use open hole techniques, an effective mud for the purpose of transporting out the loosened soil and for stabilizing the wall and bottom of the borehole may be manufactured by adding a fat clay or bentonite, or one of its derivatives, in sufficient amount, to the native mud. When making boreholes in very porous material, the Contractor may, with the prior consent of the Engineer, drive casing to seal the wall of the borehole. The volume of mud to be calculated at any time shall be no more than is necessary to transport the loosened soil, but in no event more than 10 gal per minute when making the borehole in 2.5-in. casing. No rig shall be removed from its position above the borehole nor shall the casing be pulled from the hole until the inspector has been shown a copy of the field log for that hole and has approved the removal of the rig and/ or of the casing.

D. Changes in Soil

At each change in soil, as detected by the driller with intervals not to exceed those as stated under Item 190.61, the drilling operation shall cease and the borehole conditioned for sampling by slowing the pump, raising the bit off the bottom and circulating the liquid to remove from suspension large particles which might become settled solids and thus a part of the sample. The bit on the bottom end of the hollow rod shall then be replaced with a 1 ⅜-in. inside diameter split-tube sampler which shall be entered into the undisturbed soil at the bottom of the borehole for the sample.

E. Obstructions

Should an obstruction be encountered in a drive sample boring, the Engineer may require the Contractor to make additional borings at locations to be determined by the Engineer to attempt to pass the obstruction and complete the boring. "Practical Refusal," boulders, hard material or rock fill will not be considered an obstruction. Final determination when and if an obstruction is encountered shall be made by the Engineer. Borings terminating on obstructions shall be considered trial borings and paid as a drive sample boring.

F. "Practical Refusal"

The term "Practical Refusal" shall mean failure of the sampler to penetrate at least 12 in., when driven 120 blows using a 140-lb weight free-falling 30 in. In each case the Engineer by observation shall determine that a Practical Refusal actually has been encountered. A Practical Refusal will not be accepted as the termination of a borehole above the highest bottom elevation as specified on the plans stated elsewhere.

190.61: Drive Sample Borings

Control Borings and Complementary Borings, when required for design and/or construction purposes, shall be started as drive sample borings and compensated for as hereinafter provided. Control Borings should be completed and boring reports on same submitted as specified under 190.21: Borings, Samples and Reports before any Complementary Borings are started. All, some, or none of the Complementary Borings may be required, depending on analysis of the Control Boring Data.

A sample shall be obtained at the beginning of each borehole and at each change in:

a. Soil
b. Consistency of a plastic stratum
c. Density of a granular stratum

In addition to the above, samples shall be taken so that no sampling interval exceeds 5 ft in a continuous stratum. However, the sampling procedure of obtaining a sample at each change as specified will take precedent.

In addition to taking the samples as mentioned, a sample shall also be obtained at specific elevations for certain borings when shown on the boring plans. These samples from certain elevations shall be placed in as many 4-oz jars as necessary to accommodate the contents of the entire sample recovered from the split spoon sampler and all jars shall be properly labeled and preserved as specified in the Standard Specifications. If a sample is lost during the recovery, then the borehole shall be sampled again to recover a suitable sample at the specific elevation (or as close to it as possible) as given on the plans for certain borings. An acceptable minimum size sample shall be at least 6 in. in length. This requirement shall not apply if bedrock is encountered above the specified elevation.

A sampler of the size and type specified in 190.60: General, Paragraph D shall be driven to obtain the sample. Between each blow of the drive-weight, the sampler shall be turned clockwise at least one-quarter of a revolution to keep it free.

In no event will washed, bucketed, or bobbed samples be accepted.

Before sampling, the driller shall mark the drill rods in three successive 6-in. increments so that the advance of the sampler under the impact of the hammer can be easily observed for each 6-in. increment.

During the sampling operation, the driller of the boring crew shall count and record the number of blows required to affect each 6-in. increment of penetration or fraction thereof for a distance of 18 in. using a 140-lb weight free-falling 30 in.

The number of blows required to affect each 6 in. of penetration or fraction thereof for a distance of 18 in. shall be recorded on the field log and final log.

The first 6 in. shall be considered to be the seating drive. The summation of the number of blows for the second and third 6-in. increment of penetration shall be the penetration resistance (N).

The blow counts shall be shown on the final boring log as recorded in 6-in. increments or fraction thereof, if the sampler fails to penetrate the 6 in., with the corresponding sample depth.

The borehole shall be kept completely full of drilling liquid during the sampling and recovery operation.

Each sample, immediately upon its recovery, shall be placed, (not jammed) in a 4-oz glass jar. Sample jars shall be of the same diameter for their full length and shall have screw tops fitted with gaskets. Samples of cohesive soils shall be struck even with the top of the jar. Jars containing samples shall be stored in a cool, damp place, free from exposure to frost or excessive heat. Each jar shall be properly labeled, and its lid marked to identify its contained sample. The labeling shall be typewritten and the label glued to the side of the jar.

These labels shall show the following information in a neat, legible manner:

- Name and address of boring contractor.
- Date the boring was made.
- Location and name of project.
- Number of each boring as shown on the boring plans and log.
- Number of the sample as shown on the boring log.
- Depth at which the sample was obtained.
- Number of blows required to drive the sampler 1 ft, using a 140-pound weight free-falling 30 in.
- Brief description of the classification of the material composing the sample.

All jars shall be packed one tier in clean, unused, substantial, partitioned paperboard cartons. Each carton shall contain exactly 24 jars. If the number of jars containing soil samples is less than 24, the remaining spaces in the carton shall be filled with empty jars.

In each carton the jars shall be arranged in successive order as the samples were obtained from each bore-hole, starting in the upper left-hand corner, which shall be clearly identified with a felt tip marker on the outside, then moving from the top to the bottom of each succeeding row until all compartments have been filled. Jars left over to complete a borehole shall be similarly arranged, starting in the next numbered carton. Cartons shall be numbered successively on both ends with a felt tip marker. On both ends of each carton shall be glued a typewritten paper label, containing in the same format the information required on the boring Record Cards, which fully describes its contents.

Each driller shall sign only the notes for the borings they have made. These notes shall be preserved by the Contractor for future reference. The Inspector shall sign the field copy of the notes also.

At the completion of the boring work, the Contractor shall prepare a boring report containing a graphic representation (or log) of the results obtained. The log for each boring shall be a continuous vertical column, without discontinuity or offset and plotted to not less than ⅛ of an inch per foot.

The logs for all borings for each structure or construction unit shall be plotted to the same scale, on a type of transparent paper such as onion skin 8.5 in. wide and not less than 11 in. long; and contain one log per sheet.

The boring report shall contain the following minimum information and be typewritten:

(1) Date, location and name of project.
(2) Boring number or other designation.
(3) Survey station and offset.
(4) Starting grade of each boring (to be supplied by the Engineer).
(5) Depth and a brief, proper classification by visual and manual inspection of each type of material including rock successively encountered in each borehole. Granular soils shall be classified by apparent grain size and state of denseness; clay soils by color and state of consistency, either as hard, medium or soft, and silts as organic or inorganic all in accordance with the Department's Visual Identification of Soils Table. Abbreviations shall not be used on the final typewritten log.
(6) The resistance offered to penetration of the sampler, when sampling each stratum of soil, as represented by the number of blows required to drive the specified sampler 1 ft, or the designated fraction or multiple thereof, with a 140-lb weight free falling 30 in.
(7) Special Note "CHANGED LOCATION" shall be made on each boring log to indicate any field change from survey layout, and an explanation of the reason for the change.
(8) Distance below starting grade to the surface of water in the borehole at its completion and at other times (if any) as required in the Special Provisions, and any unusual behavior of ground-water observed during the boring operation.
(9) Every unusual condition noted during the entire operation. When boulders or cobbles are encountered the driller shall note this on the log and how the boring was made through the boulders or cobbles.
(10) Below each boring log shall be noted the hour and date of start and completion, the actual hours worked to complete the borehole and the name of the driller and inspector.

190.62: Hollow Stem Auger Borings

This type of Boring, when specified by the Engineer will be made in accordance with the specification and the special provisions of the Contract. When Hollow Stem Augers are used the type samplers specified under 190.60: General, Paragraph D, shall be used. A center rod, plug, and pilot bit will be in place while advancing the hole by rotation but to a depth no greater than the sampling interval. The center rod, plug, and pilot bit shall be removed and the sample obtained by driving the sampler 18 in. into the undisturbed material below the bottom of the auger. When sampling below the water table, the Hollow Stem Auger shall be kept full of water or drilling fluid. The auger flights shall be 5 ft in length and the maximum sampling interval shall not be greater than 5 ft.

However, the sampling procedure of obtaining a sample at each change shall take precedent as specified in 190.61: Drive Sample Borings. If the hollow stem auger encounters cobbles, boulders or similar material and fails to penetrate the material after an attempt has been made, then the Engineer may direct the contractor to make the boring by other methods such as a drive sample boring. However, the Engineer will decide when and if this procedure will be employed. Logs,

samples and other pertinent information will be as specified in Subsection 190: Borings contained herein.

190.63: Core Borings

This type of boring is made after the casing has been sealed on bedrock to prevent loose material from entering the hole and to prevent the loss of drilling fluid return, regardless of the type or types of material encountered. Core Borings into bedrock shall be accomplished by the diamond bit, rotary drilling method. The minimum distance of coring into bedrock shall be 10 ft. The minimum diameter of acceptable core shall be 1 ⅜ in. Where rock cores are required, the coring shall be done with a Double Tube Core Barrel in runs of 5 ft or less.

Every effort and precaution shall be made by the Contractor to insure the best possible recovery and preservation of the rock cores.

Should the recovered length of core be less than 75% of the depth cored, the Contractor shall adopt measures as may be necessary to improve the percentage of recovery.

Measures to improve recovery may include changes in:

(1) Type of diamond bit.
(2) Rate of feed.
(3) Speed of rotation.
(4) Volume of cooling water.
(5) Style of core barrel
(6) Depth of coring for each removal of core.
(7) Machine operator.
(8) Type of machine.

All recovered cores, including fragments, shall be carefully handled to avoid breakage. They shall be placed in wooden boxes furnished by the Contractor. Boxes shall be in accordance with details furnished by the Department.

Cores shall be placed in the box in consecutive order as they are removed from the core barrel. The trough containing each core shall be fully identified and marked to show the top and bottom of the core.

Upon completion of each core boring all information obtained, including a brief description of the rock type, length or run, length recovered, percentage recovered, coring time, type of barrel used, etc., shall be added to the log of the corresponding boring. The boxed cores and completed logs shall be delivered to the Engineer, as required under 190.21: Borings, Samples and Reports. All lengths and percentages recovered shall be verified by the Inspector.

190.64: Thin-Wall Steel Tube Drive Samples

Where organic and inorganic clay or other soils are encountered while making a borehole, the Engineer may require the Contractor to obtain thin-wall steel tube drive samples. The tube shall not be less than 2 in. in diameter nor less than 18 in. long and need not be sharpened. The diameter of the thin-wall tube shall be specified in the special provisions. Making the borehole shall follow the procedure outlined under 190.60: General, Paragraph C. The steel tube shall be driven its full length

into the material to be sampled. The loaded steel tube shall be sealed, marked for identification and handled in the manner described under 190.66: Undisturbed Samples.

190.65: Undisturbed Sample Preparatory Borings

The results of Drive Sample borings will determine whether Undisturbed Samples are required and the elevations at which they can be obtained.

The applicable parts of 190.60: General, Paragraph C, shall be followed in making this type of boring. The volume of mud circulated shall be increased just enough to transport the loosened soil from the borehole. The last 2 ft of borehole above the elevation at which an undisturbed sample is to be obtained shall be made with a bit built to deflect the flow of mud from a downward direction. Final preparation of the borehole to the top of each undisturbed sample shall be accomplished with a properly constructed and operated clean-out auger. The borehole shall be free of soil panicles, soil shavings and settled solids to the surface of undisturbed soil and shall be full of mud to the overflow nipple at the top of the casing.

(1) Drilling Procedure.

"Open hole" techniques may be allowed for advancement of the borehole. When casing is used the diameter shall be at least 1 in. larger than the diameter of the undisturbed sample called for.

Independent of the hole advancement technique (casing or open hole) selected, heavyweight drilling fluid with a unit weight between 75 to 95 pcf will be required. The unit weight employed will be selected by the Engineer or their representative in the field, based on hole depth and soil characteristics. The purpose of the drilling fluid is to maintain hole stability and minimize sample disturbance.

(2) Drilling Fluid.

Drilling Fluid shall be produced using clean water and bentonite or one of its derivatives. The drilling fluid shall be mixed to a uniform consistency acceptable to the Engineer. A drilling fluid net weight of 75 to 95 pcf (as determined by the Engineer) shall be obtained and thereafter maintained during execution of the borings, from which undisturbed samples are obtained. The borehole shall be filled with drilling fluid; the fluid level shall be maintained above the ground or water surface at all times until the last sample is taken from the drill hole.

(3) Drill Rods.

Drill rods provided for drilling, washing, and sampling within the borehole shall be of such a size that sufficient fluid flow (as determined by the Engineer) can be delivered to the bottom of the hole to permit complete flushing of soil when drilling at maximum depth. Drill rod fittings shall be provided to permit attachment of the drill rods to the thin wall tube sampler.

(4) Pump.

The Contractor shall furnish a suitable pump capable of pumping and recirculating the weighted drilling fluid used for the depth and diameter of boring required.

The use of casing for Undisturbed Sample Preparatory Boring shall follow the procedure outlined under 190.60: General, Paragraph B. The casing shall have a nominal diameter at least 1 in. larger

than that of the undisturbed sample called for in the Special Provisions. Drive Samples shall be obtained as directed by the Engineer.

Immediately after recovery of an undisturbed sample, as described in under 190.66: Undisturbed Samples, the Inspector will examine the ends of the tube for adequacy and condition of the sample. If unacceptable, the borehole shall be re-prepared and additional samples taken until a satisfactory recovery is made.

190.66: Undisturbed Samples

Undisturbed samples shall be obtained with a stationary piston, thin-wall, steel tube sampler operated by a separate piston rod (actuating rod) and a sampler head with an appropriate spring and piston rod cone check. The diameter of the undisturbed samples shall be as specified in the Special Provisions. The sampler must be kept in perfect mechanical condition and operated at all times in a manner that will produce acceptable undisturbed samples.

The Osterberg method for obtaining an undisturbed sample may be substituted for the stationary piston method, if approved by the Engineer.

The seamless steel tube shall have a wall thickness not greater than #16 gauge. It shall be of a proper length to produce a net sample 24 in. long. Its bottom edge shall be drawn and reamed knife-sharp to an internal diameter approximately 1.75% less than the inside diameter of the tube. The tube shall be free of all scale or other deleterious material and may have a coat of thin enamel paint, lacquer, teflon, or other similar material. Just before being lowered to sample, the inside of the tube shall be wiped dry. Tubes with rusted surfaces shall not be used.

After being fully assembled and lowered to sampling position, the sampler shall be entered into the undisturbed soil by a rapid, continuous movement, without rotation.

A rest period of not less than 15 minutes shall be allowed for the sample to develop friction on the inside of the tube. The loaded tube shall then be rotated by turning the top of the drill-rod. A direct, slow and steady pull, accompanied by rotation, shall remove the loaded tube from the soil. Raising the tube to the surface shall be done without quick starts, sudden stops or vibrations. The borehole is to be kept full of mud during the entire recovery operation.

To free the loaded tube from the sampler-head, without damaging the sample, the vacuum breaker shall be opened. Immediately after the tube is freed, its end shall be inspected and if found satisfactory shall be sealed against loss of moisture.

The top and bottom of the tube shall be sealed with molten beeswax or a microcrystalline petroleum wax heated to a temperature not higher than its melting point. The total thickness of seal shall be approximately ¾ in. Any space remaining at either end shall be filled to within ¾ in. of the end of the tube with firmly pressed damp sand. Sealing wax shall then be poured flush with the end of the tube, which shall be covered with several layers of electrician's tape.

A paper label, on which is recorded in ink all pertinent information as required in 190.61: Drive Sample Borings relating to the contained sample, shall be glued to the tube. The same data shall be printed directly on the tube with a felt-tip marker of a contrasting color.

The loaded tubes shall be packed in well-built wooden boxes at the sampling site. Each box shall contain no more than one 5-in. nor more than two 3-in. or four 2-in. tubes. Each tube shall be

surrounded by at least 2 in. of resilient packing. A record of its contents shall be marked on the lid of each box with a felt-tip marker. The boxes shall be delivered at the completion of each borehole as directed in writing by the Engineer.

An acceptable undisturbed sample for laboratory tests shall, when split in two longitudinally and partially dried, disclose no observable distortions in its stratifications and/or shear planes that can be reasonably attributed to the sampling and handling operations. The Engineer may direct the Contractor to alter the cutting edge clearance of the sampling tube.

Where undisturbed samples are to be taken over water (tidal or otherwise), the Contractor shall have the necessary equipment to properly obtain an undisturbed sample on water and have the necessary devices to stabilize the barge or raft while making an undisturbed sample.

190.67: Vane Shear Test Preparatory Borings

The borehole shall be made under applicable parts of 190.60: General, Paragraph C and 190.65: Undisturbed Sample Preparatory Borings to a point 4 ft above the elevation at which a vane shear test is to be made. The next 2 ft of borehole shall be made with a bit built to deflect the flow of mud from a downward direction. By means of a clean-out auger built for the purpose, all soil and shavings shall be removed to an elevation 1 ft above the position of the top of the vane tool during the test. Drive samples shall be obtained as directed by the Engineer.

190.68: Vane Shear Test

The in-place shear strengths of cohesive soils shall be measured by means of field vane shear tests. The Contractor shall have the required vanes as specified in the contract.

The penetrating edge of the vane blade shall be sharpened having an included angle of 90°. A ball bearing casing guide shall be attached to the drill rods 2 ft above the vane and additional ball bearing casing guides shall be provided for each 20 ft of drill rods required thereafter. All drill rods shall be made up tightly. The vane shall be pushed into the soil below the bottom of the hole in a manner that will prevent rotation during insertion. The bottom of the vane shall be inserted 18 in. into the undisturbed soil at the bottom of the hole.

After insertion, the drill rods shall be clamped securely to a thrust type ball bearing reacting against the casing, this bearing should support the entire weight of the vane and rods during test. A rotation of the vane shall be accomplished by means of a mechanical gear driven mechanism which shall produce a uniform rate of rotation of about 1° every 10 seconds (6° per minute). Accurately calibrated torque mechanism or proving rings with maximum readings of ft-lb shall be provided to measure the applied torque. Equipment shall be acceptable to the Engineer and in good working order. Torque wrenches will not be allowed. Calibration of Vane Shear Equipment by an acceptable organization capable and specializing in this work will be required. If said equipment has been calibrated and checked within the last 6 months by a recognized laboratory no additional calibration will be necessary. Certificate of Proof will be required.

A friction check will be run prior to each test when directed by the Engineer.

One man shall rotate the vane while the Engineer observes the torque gauge. Special attention shall be given to determine the maximum torque registered.

Following the determination of the maximum torque the remolded shear strength shall be determined in the same manner after rapidly rotating the drill rods about 12 revolutions. The determination of the remolded strength should be started immediately after completion of the rapid rotation and in all cases within one minute after the remolded process.

During the tests, readings of time, applied torque and angular rotation should be recorded at 15-second intervals until the maximum torque is achieved. The maximum torque in ft-lb, the time and angle of rotation measured from the start of the test to the development of maximum torque shall also be recorded. A complete description of the apparatus and detailed dimensions of the vane shear tool shall be submitted with the test report.

Completion of the procedure described above including determination of the remolded shear strength shall constitute one field vane shear test for payment purposes.

If the Contractor is unable to push or drive the vane into the soil below the bottom of the hole after lowering the drill rods and vane to the required depth or if they are unable to rotate the vane to determine the maximum torque due to the stiffness of the soils or due to an obstruction, compensation will be considered included in the Unit Bid Price per foot for Vane Shear Test Preparatory Boring and no further compensation will be made.

190.69: Auger Borings

Auger borings shall be made where directed to obtain large volume soil samples for laboratory testing. The borings shall be made to depths required by the Engineer, with an earth auger not less than 4 in. in diameter, either manually or power operated. The auger section shall not exceed 5 ft in length and shall be removed from the auger hole each time its hollows have become filled with soil.

190.70: Auger Boring Samples

Large volume soil samples for laboratory testing shall be obtained from auger borings. Each sample shall weigh at least 50 lb and shall be preserved in an approved container. The number of samples required at each borehole shall be determined by the Engineer.

The container for each sample shall have positive identification of the contents, either by typewritten glued-on label, by wired-on tag or by felt-tip marker. The following information shall be shown:

1. Name and address of boring contractor.
2. Date sample was taken.
3. Location and name of project.
4. Location of auger borehole by station and offset or identifying number of auger borehole, if so identified on plan.
5. Depth below ground surface at which sample was obtained.

190.71: Ground Water Observation Wellpoints

Type I

A 2.5-in. minimum diameter hole shall be advanced by the Contractor by whatever method they choose to the elevation specified regardless of type of material encountered such as boulders, “Practical Refusal” material, rock fill, etc., with the exception of bedrock. When the bottom of the

hole has reached the elevation specified for the tip of the well point, it shall be purged to its full depth with clean water.

The wellpoint shall have ample clearance so that it may be lowered freely in the borehole. The screen shall be 60 mesh. The minimum dimension of the wellpoint shall be 1.25 in. x 24 in.. The riser, rigidly fastened to the well point, shall be 1.25-in. galvanized pipe. A galvanized pipe plug or a cap with a vent hole shall be furnished to close the top of the riser. After the well point has been lowered to the specified elevation, the annular space between the well point and riser pipe and the 2.5-in. casing shall be filled with clean, dry sand. This sand shall be retained on a 50 mesh and shall pass a 30 mesh sieve. It shall be poured in slowly to fill the annular space as the casing is pulled.

During the pulling of the casing the wellpoint shall not be raised from its original position.

At completion, the top of the riser pipe shall be closed wrenchtight with a vented pipe plug or cap.

Type II

Ground Water Observation Wellpoints Type II may be installed in a completed borehole after all samples and information have been obtained from these holes. Prior to placing the wellpoint, these holes shall be purged to their full depth with clean water. Where the bottom of the borehole is lower than the highest bottom elevation of the wellpoint, that portion of the borehole below the bottom of the wellpoint, shall be backfilled with a clean dry sand to the elevation of the bottom of the wellpoint. If the bottom of the casing is below the highest bottom elevation of the wellpoint when the sand has reached the elevation of the bottom of the casing, the backfilling and pulling of casing shall be carried out simultaneously to the highest bottom elevation of wellpoint and continued as directed for Type I Groundwater Observation Wellpoints.

Backfilling of boreholes below bottom of well point, where required shall be included in the cost of Ground Water Observation Wellpoints Type II. Where bedrock is encountered the diameter of the borehole and rock core shall be large enough to accommodate a wellpoint and riser pipe.

Type III

Ground Water Observation Wellpoints Type III wellpipe and screen shall be installed as described in these specifications for Type I Ground Water Observation Wellpoints, except that the wellpipe and screen used shall be 2-in. PVC schedule 40 threaded flush joint well pipe and wellscreen. Wellscreen slot width shall be 0.010 in. A suitable threaded plug shall be installed at the bottom of the wellscreen. A suitable vented thread cap shall also be installed at the top of the well pipe when requested by the engineer. No cementing will be allowed. The length of the wellscreen for each Type III Ground water Observation Wellpoint will be designated on the plan by the Engineer. Separate payment will be made for the wellpipe used and the wellscreen used.

The hole made shall be of sufficient diameter to accommodate the wellpipe and screen.

Type IV

Ground Water Observation Wellpoint Type IV wellpipe and wellscreen may be installed in a completed borehole after all samples and information have been obtained from these holes. The method of installation shall be the same as described in these specifications for Type II Ground Water Observation Well points except that the well pipe and screen used shall be 2-in. PVC schedule 40 threaded flush joint wellpipe and wellscreen. Wellscreen slot width shall be 0.010 in. A suitable

threaded plug shall be installed at the bottom of the wellscreen. A suitable vented threaded cap shall be installed at the top of the well when requested by the Engineer. No cementing will be allowed. The length of the wellscreen for each Type IV well will be designated on the plan by the Engineer.

The borehole shall be of sufficient diameter to accommodate the wellpipe and screen. If bedrock is encountered the borehole shall be large enough to accommodate the wellpipe and screen.

When directed by the Engineer, sand may be omitted on all types of well installation.

190.72: Mobilization and Dismantling of Boring Equipment

This work shall include the furnishing at the site of all men and equipment necessary to properly complete the work detailed in the Proposal, including the moving of men and equipment from one project site to another and the restoration of each site after the boring equipment has been removed. It shall also include all special tools and equipment necessary to perform the work in or on water and in other places not readily accessible.

190.73: Test Pits

Dimensions of Test Pits will be such that a 50-lb sample can be obtained at depths specified. The pit can be dug by hand or machine at locations as directed by the Engineer. In no case will the depth of pit be more than 12 ft. Test Pits shall be properly sheeted to protect the workers as required in 140.60: General, Paragraph F, and shall be large enough to allow the inspection of soil conditions and/or the procurement of 50-lb bag samples. (Maximum number not to exceed 3).

Each sample shall weigh at least 50 lb and shall be preserved in a suitable and approved container. The container for each sample shall have positive identification of contents either by typewritten glued on label, by wired on tag or by felt-tip marker. The label shall be covered completely with a transparent material such as tape, plastic, etc.

The following information shall be shown:

1. Name and Address of Boring Contractor.
2. Date Sample was taken.
3. Location and name of Project.
4. Location of Test Pit by Station and Offset or Identifying No. if so identified on plan.
5. Depth below ground surface at which the sample was obtained.

When the test pit is complete and required samples taken and approved by the Engineer, it shall be backfilled and compacted in an approved manner so as not to cause a hazardous condition.

Test Pits Through Pavements

When test pits are required where the Contractor must break through pavements, they shall make as small a test pit as possible. After the Contractor obtains the proper number of samples required, they shall backfill the test pit with suitable material, compact it in accordance with the Specifications. The test pit then shall be brought to the proper grade with the last 6 in. being hot mix asphalt or cement concrete whichever is applicable. The cost of patching where required shall be included in the cost of the test pit.

Test pits made through pavements shall be cut on a neat line by a jack hammer, saw or other mechanical means. The cost of cutting the pavement on a neat line by jack hammer, saw or other mechanical means and patching the pavements as required shall be included in the unit bid price for test pits made through pavements.

COMPENSATION

190.80: Method of Measurement

Drive Sample Borings and Hollow Stem Auger Borings when completed as such, will be measured by the foot of borehole made in original and trial borings below the ground surface, regardless of the type of materials encountered, such as boulders, "Practical Refusal" material, rockfill, etc. with the exception of bedrock.

Core Borings will be measured by the foot cored into bedrock.

Undisturbed Sample Preparatory Borings and Vane Shear Test Preparatory Borings will be measured by the foot of borehole made below the ground surface to the lowest undisturbed sample made or Vane Shear Test performed.

Thin-wall Steel Tube Drive Samples, Undisturbed Samples, Auger Boring Samples and Vane Shear Tests will be measured for each acceptable sample recovered or test made.

Auger Borings will be measured by the foot of borehole made below the ground surface.

Ground Water Observation Wellpoints Type I and Type Il will be measured by the foot from the tip of the wellpoint to the top of the riser pipe, but not more than 2 ft above the ground surface regard-less of the type of materials encountered such as boulders, "Practical Refusal" material, rockfill, etc., with the exception of bedrock.

Ground Water Observation Wellpoints Type III and IV wellpoint will be measured by foot from the top of the wellscreen to the top of the riser pipe but no more than 2 ft above the ground surface regardless of the type of materials encountered such as "Practical Refusal," Boulders, Rock Fill, etc., with the exception of bedrock. Ground Water Observation Wellpoints Type III and IV wellscreen will be measured by the foot from the bottom of the wellscreen to the top of the wellscreen or the actual length used regardless of the type of materials encountered such as Boulders, "Practical Refusal," Rock Fill, etc., with the exception of bedrock.

Test Pits will be measured by each Test Pit made.

190.81: Basis of Payment

Drive Sample Borings, Hollow Stem Auger Borings, Core Borings, Undisturbed Sample Preparatory Borings and Vane Shear Test Preparatory Borings will be paid at the contract unit price per foot for the kind of boring completed as required: payment to include installation of casing as required, including telescoping and spinning of casing when necessary, recovered cores and drive samples. Payment for Undisturbed Preparatory and/or Vane Shear Test Preparatory will only be made to the lowest undisturbed sample made or to the last Vane Shear Test performed. If the boring is continued beyond this point it shall be paid as a Drive Sample boring or other type for the remainder of the borehole or as specified in the Special Provisions.

When borings are located on the water, payment shall be made at the contract unit price per foot for the type of boring made only for the depth of hole below the river, lake, stream, etc., bottom.

Auger Borings will be paid at the contract unit price per foot completed as required.

The cost of any materials required to restore the site to its original condition will be included in the unit price of the item.

Ground Water Observation Wellpoints Type I and Type II will be paid at the contract unit price per foot which shall include full compensation for a log and all materials left in place.

Ground Water Observation Wellpoints Type Ill and IV wellpipe and wellscreen will be paid at the contract unit bid price per foot which shall include full compensation for a log and all materials left in place.

Thin-Wall Steel Tube Drive Samples, Undisturbed Samples, Auger Boring Samples and Vane Shear Tests will be paid for at the contract unit price for each acceptable sample or test completed as required.

Mobilization and Dismantling of boring equipment will be paid for at the contract lump sum price for Item 193.

Test Pits will be paid at the contract unit price for each test pit actually dug. The contract unit price shall include all labor, equipment, supplies, tools and incidentals required to dig the test pits. The cost for any material to restore the site to its original condition and cutting through pavements will be included in the Item. The Unit Bid Price shall also include the cost of obtaining 50-lb bag samples (maximum number of 3) as directed and all other incidental work thereto, including a log.

190.82: Payment Items

191.	Drive Sample Boring	Foot
191.10	Hollow Stem Auger Boring	Foot
191.11	Core Boring	Foot
191.2	Undisturbed Sample Prep. Boring	Foot
191.21	Undisturbed Sample	Each
191.3	Vane Shear Test Prep. Boring	Foot
191.31	Vane Shear Test	Each
191.4	Auger Boring	Foot
191.41	Auger Boring Sample	Each
191.5	Thin Wall Steel Tube Drive Sample	Each
191.6	Test Pit	Each
191.61	Test Pits Through Pavements	Each
192.	Ground Water Observation Wellpoint Type I	Foot
192.1	Ground Water Observation Wellpoint Type II	Foot
192.2	Ground Water Observation Wellpoint Type III – Solid Pipe	Foot
192.21	Ground Water Observation Wellpoint Type III – Wellscreen	Foot
192.3	Ground Water Observation Wellpoint Type IV – Solid Pipe	Foot
192.31	Ground Water Observation Wellpoint Type IV – Wellscreen	Foot
193.	Mobilization and Dismantling of Boring Equipment	Lump Sum

SECTION 200: DRAINAGE

SUBSECTION 201: BASINS, MANHOLES AND INLETS

DESCRIPTION

201.20: General

This work shall consist of the construction of manholes, inlets and basins in accordance with the specifications, and in close conformity with the lines and grades shown on the plans or established by the Engineer.

MATERIALS

201.40: General

Concrete for these structures shall meet the requirements of Subsection 901: Cement Concrete. Other materials shall meet the requirements specified in the following Subsections of Division III, Materials

Clay Brick M4.05.2
Cement Concrete Blocks M4.05.1
Precast Drainage Structures M4.02.16
Cement Mortar M4.02.15
Reinforcing Bars M8.01.1
Iron Castings M8.03.0
Steel Castings M8.03.2
Dry Stone Masonry M9.04.9

CONSTRUCTION METHODS

201.60: General

Basins, manholes and inlets shall be built to the lines, grades, dimensions and design shown on the plans and as directed with the necessary frames, gratings, covers, hoods, etc., and in accordance with these specifications. Basins and inlet grates other than Cascade type may be Type A-1 or A-3, but only one type may be used throughout the project.

Sanitary Sewer Manholes shall be constructed according to the specifications of the Municipality as designated in the Contract.

201.61: Excavation

Excavation shall conform to the applicable portions of Subsection 140: Excavation for Structures.

201.62: Laying Brick and Blocks

Brick and concrete blocks shall be soaked in water before laying. All joints in brick structures shall be thoroughly flushed full of mortar and no joint on the inside face shall be greater than ⅛ in. After

the bricks are laid, the joints shall be pointed on the outside. As brick walls are laid up, the outside of the structure shall be plastered with ½-in. thick mortar coat. As circular concrete block walls are laid-up the horizontal joints and keyways shall be flushed full with mortar. As rectangular blocks are laid up all horizontal and vertical joints shall be flushed full with mortar. Plastering of the outside of block structures will not be required. The joints in precast units shall be wetted and completely mortared immediately prior to settling a section. No structure shall be backfilled until all mortar has completely set. When the floors of structures are made of concrete sectional plates the opening in the floor shall be filled with brick chips and mortar, cement concrete, or left open, as directed.

201.63: Placing Castings

Frame castings for basins, manholes and inlets shall be set in full mortar beds true to the lines and grades as directed.

Where directed the castings shall be temporarily set at such grades as to provide drainage during the construction.

The castings of structures located within the pavement area shall not be completely set to the established grade until the bottom course of pavement has been laid.

The final setting of all other castings shall be performed at the proper stage of construction as directed.

Cement concrete collars shall be placed around the castings after the final setting as shown on the plans and as directed.

Hoods shall be installed in catch basins only when required by Special Provisions.

201.64: Weep Holes

Two weep holes shall be built into the walls of all new basins, precast units and in Types C, CF, D and DF drop inlets as shown on the plans. Each weep hole shall consist of a section of 4-in. pipe or equivalent opening to carry water through the wall of the structure.

The ends of the pipe, if used, shall be saw cut and left flush with the walls of the structure.

The outside end of the pipe or opening shall be covered with a ¼-in. mesh galvanized wire screen 23 gauge satisfactorily fastened against the wall. The drain to the weep hole shall be excavated and backfilled with 2 ft^3 crushed stone conforming to Section M2: Aggregates and Related Materials. The stone shall be placed against and over the end of the pipe or opening to prevent the entrance of the finer filling material. Only one type of weep hole shall be used throughout the project.

201.65: Backfilling

Backfilling requirements shall conform to the Provisions of 120.60: General, Paragraph B, 150.60: General, and 150.64: Backfilling for Structures and Pipes.

COMPENSATION

201.80: Method of Measurement

Measurement for catch basins, leaching basins, manholes and drop inlets (Types C and D), will be based on a standard unit having a depth of 6.5 ft; for drop inlets (Types A and B) having a depth of 4 ft-10 in., as measured vertically at the center of the structure from the top of the grating or cover to the top of the floor in the case of basins and inlets and the invert in the case of manholes. When the measured depth exceeds the standard unit, the number of units paid for will be in the proportion of the measured depth to the standard depth down to 9 ft. Basins, manholes, or drop inlets having a depth less than this standard unit will be counted as one unit. Each gutter inlet shall be counted as one unit. Measurement for manholes more than 9 ft down to a depth of 14 ft will be based on a standard unit depth of 9 ft as measured vertically at the center of the structure from the top of the cover to the invert. Measurement for manholes more than 14 ft down to a depth of 18 ft will be based on a standard unit depth of 14 ft as measured vertically at the center of the structure from the top of the cover to the invert.

When items for Manholes (9 to 14 ft Depth) or Manholes (14 to 18 ft Depth) do not appear in the Proposal the standard unit of depth for all structures shall be 6.5 ft.

Special manholes will be measured as complete units regardless of depth.

Frames and grates or covers will be measured by each complete unit furnished and delivered to the site.

201.81: Basis of Payment

The accepted quantities of manholes, inlets and basins will be paid for at the contract unit price each, complete in place, which shall include crushed stone for weep holes and installation of the frame and grate or cover.

Payment for the concrete collars shall be included in the contract unit price of the structure involved.

Extra depth excavation below the proposed bottom of structure to obtain a stable foundation will be paid for as Class B Trench Excavation.

When directed, the castings of drainage structures on roadways opened to traffic will be set to a temporary grade, and the unit will be considered complete in place and paid for at the contract unit price for the type of structure involved. At such time as the casting or structure and casting is adjusted to final grade the work shall be done and payment made under the provisions of Subsection 220: Adjustment, Rebuilding and Remodeling of Drainage Structures.

If the material for backfill is obtained from borrow it will be paid for at the contract unit price per cubic yard or ton for the kind of borrow required.

Frames and grates or covers will be paid for at the contract unit price each under the items for furnishing and delivering new frames and grates or covers.

Hoods shall be paid at the contract unit price each and shall include furnishing and installation of the hood.

201.82: Payment Items

201.	Catch Basin	Each
202.	Manhole	Each
202.2	Manhole (9 to 14 Foot Depth)	Each
202.3	Manhole (14 to 18 Foot Depth)	Each
203.	Special Manhole	Each
204.	Gutter Inlet	Each
205.	Leaching Basin	Each
206.	Drop Inlet, Type A	Each
206.1	Drop Inlet, Type AF	Each
207.	Drop Inlet, Type B	Each
207.1	Drop Inlet, Type BF	Each
208.	Drop Inlet, Type C	Each
208.1	Drop Inlet, Type CF	Each
209.	Drop Inlet, Type D	Each
209.1	Drop Inlet, Type DF	Each
220.	Drainage Structure Adjusted	Each
221.	Frame and Cover	Each
222.	Frame and Grate - MassDOT Bar Type	Each
222.1	Frame and Grate- MassDOT Cascade Type	Each
222.2	Frame and Grate - MassDOT Drop Inlet	Each
222.3	Frame and Grate (or Cover) Municipal Standard	Each
224.*	___ Inch Hood	Each

*Pipe or appurtenance size will be included as part of the item number to differentiate between the sizes.

SUBSECTION 220: ADJUSTMENT, REBUILDING AND REMODELING OF DRAINAGE STRUCTURES

DESCRIPTION

220.20: General

The work shall consist of rebuilding, removing, replacing, discarding and adjusting the masonry and castings of present structures, as required, to conform to newly proposed line and grade changes; to change in type of structure, or changes in type of castings; all in accordance with these specifications and in close conformity with the lines and grades shown on the plans or established by the Engineer.

MATERIALS

220.40: Materials

Such materials as will be required shall conform to 201.40: General.

CONSTRUCTION METHODS

220.60: General

When the line or grade or both the line and grade of the structure changes by 6 in. or less, the structure shall be adjusted to line and grade. The masonry shall be removed to such depth as directed by the Engineer and new masonry shall be constructed to conform to the proposed design and in conformity with the requirements of the applicable parts of Subsection 201: Basins, Manholes and Inlets.

When the line or grade or both the line and grade of the structure changes by more than 6 in. the structure shall be remodeled. The sloped masonry and the vertical masonry shall be removed to such depths as directed by the Engineer and new masonry shall be constructed to conform to the proposed design and in conformity with the requirements of the applicable parts of Subsection 201: Basins, Manholes and Inlets.

When a change in type of structure is required, as converting a basin to a manhole, the masonry shall be removed to such a depth as directed by the Engineer and new masonry, including a brick invert, shall be constructed to conform to the proposed design.

When in the judgment of the Engineer the masonry shows deterioration, the structure shall be rebuilt. The casting and deteriorated masonry shall be removed in a neat manner until a clean sound base is obtained upon which concrete blocks and clay bricks may be set to rebuild the structure. Gravel borrow shall be furnished for backfill where required when excavated material is unsuitable. The casting shall be set to line and grade with a concrete collar and surfaced with a minimum of 3 in. of hot mix asphalt.

Frames and grates (or covers) determined to be unsatisfactory for reuse shall become the property of the Contractor and shall be removed and discarded. All frames and grates or covers designated to be discarded shall be carefully removed, transported and discarded in accordance with all applicable regulations.

The new masonry construction, replacing of castings, highly early strength concrete collars, backfilling around structures and other incidental work shall be as specified in Subsection 201: Basins, Manholes and Inlets.

220.61: Protection of Work

The Contractor will be held responsible for the protection of the castings. Any frames, grates, or covers damaged in any manner during the progress of the construction shall be replaced with new castings by the Contractor, at their expense.

Prior to the actual removal of the present castings a count will be made and recorded of all castings which are in satisfactory condition for reuse. The Contractor shall supply the number of castings recorded in the initial count, when they are required for reuse or when they are to be removed from the project by the Owner.

COMPENSATION

220.80: Method of Measurement

Drainage Structure Adjusted will be measured in place by the unit each, complete and approved.

Drainage Structure Remodeled will be measured in place by the unit each, complete and approved.

Drainage Structure Changed in Type will be measured in place by the unit each, complete and approved.

Drainage Structure Rebuilt shall be measured by the average height in feet, vertically to the nearest 1⁄10 ft, from the bottom of rebuilt masonry to the bottom of the casting. The removal and resetting of the casting shall be incidental to the work.

Frame and Grate (or Cover) Removed and Discarded shall be measured by each unit of frame and grate or frame and cover removed and discarded.

Table 220.80-1 summarizes the items utilized on common types of work.

Table 220.80-1: Common Drainage Structure Work

Item Number	Item Description / Pay Unit	Items necessary to Build a new Drainage Structure	Items necessary to Adjust a Structure (6 in. or less)	Items necessary to Rebuild a Structure	Items necessary to do a structure Change-in Type	Items necessary to Remodel a Structure
201 / 202	Catch Basin or Manhole / Ea	Yes				
222.1, 221. 222.	Frame and Grate or Cover / Ea	Yes	If required	If required	Yes	If required
224.*	Hood / Ea	If required	If required	If required	If required	If required
220	Drainage Structure Adjusted / Ea		Yes			
220.2	Rebuild / Foot			Yes		
220.3	Change-in-Type / Ea				Yes	
220.5	Remodel / Ea					Yes

220.81: Basis of Payment

Drainage Structure Adjusted will be paid for at the contract unit price each.

Drainage Structure Change in Type will be paid for at the contract unit price each.

Drainage Structure Remodeled will be paid for at the contract unit price each.

Drainage Structure Rebuilt will be paid for at the contract unit price per foot.

The work of removing, adjusting and resetting the casting and installation of new castings shall be incidental to the pay items for adjust, rebuild, remodel, or change in type of the structure.

Frames and grates or covers furnished and delivered to the site will be paid for under the provisions of Subsection 201: Basins, Manholes and Inlets.

Frame and Grate (or Cover) Removed and Discarded shall include all labor, equipment and transportation necessary to remove and discard the materials to the satisfaction of the Engineer.

Furnishing new hoods shall be paid for at the contract price each under the items for ___ Inch Hood.

220.82: Payment Items

220.	Drainage Structure Adjusted	Each
220.2	Drainage Structure Rebuilt	Foot
220.3	Drainage Structure Change in Type	Each
220.5	Drainage Structure Remodeled	Each
220.7	Sanitary Structures Adjusted	Each
221.	Frame and Cover	Each
222.	Frame and Grate – MassDOT Bar Type	Each
222.1	Frame and Grate – MassDOT Cascade Type	Each
222.2	Frame and Grate – MassDOT Drop Inlet	Each
222.3	Frame and Grate (or Cover) Municipal Standard	Each
223.2	Frame and Grate (or Cover) Removed and Discarded	Each
224.*	___ Inch Hood	Each

*Pipe or appurtenance size will be included as part of the item number to differentiate between the sizes.

SUBSECTION 227: DRAINAGE SYSTEM SEDIMENT

DESCRIPTION

227.10: General

The work shall consist of removal and disposal of accumulated sediment, which may contain refuse and other debris, from designated drainage systems, including: drainage structures, pipes, the gutter mouth of curb inlets, and as directed by the Engineer.

CONSTRUCTION METHODS

227.21: Regulatory Requirements

Drainage system sediment is classified as a solid waste by the DEP and must be handled and disposed in accordance with Solid Waste Management Regulations 310 CMR 19.000, as well as all other applicable DEP policies and guidance.

Sediment must arrive at the disposal facility sufficiently dry since DEP regulations prohibit landfills from accepting materials that contain free draining liquids. A permitted solid waste disposal facility may require characterization of the material prior to accepting it for disposal at the facility. The Contractor shall provide copies of all material shipping records to the Engineer.

227.23: Prosecution of Work

No casting shall be removed until immediately preceding the work and shall be replaced immediately after the cleaning of the drainage structure and/or pipes is completed. Open catch basins shall not be left unattended. The Contractor shall properly secure the grate locking device after cleaning.

The Contractor shall protect the cast iron hood of drainage structures so equipped, during the sediment removal process. Equipment used to collect drainage system sediment shall be capable of decanting free flowing liquids back into the drainage system. Conditions such as location, extraordinary shape due to conduits or public utility pipes, or off pavement work, may require hand work. Drainage system sediment shall be transported to a disposal facility in trucks that will not spill the material along the roadway. Any sediment falling on the roadway shall be removed by the Contractor at their own expense.

COMPENSATION

227.30: Method of Measurement

Sediment removed from drainage structures will be measured by the cubic yard after decanting.

Sediment removed from drainage pipes will be measured by the foot of drainage pipe, regardless of the diameter of pipe from which material is removed.

227.31: Basis of Payment

Removal and disposal of drainage structure sediment will be paid for at the contract unit price per cubic yard.

Removal and disposal of drainage pipe sediment will be paid for at the contract unit price per foot, regardless of the volume of sediment removed.

The price of these items shall include all labor, equipment, approvals, permits, testing, transportation, disposal and all other incidentals necessary to complete the work.

227.31: Payment Items

227.3	Removal of Drainage Structure Sediment	Cubic Yard
227.31	Removal of Drainage Pipe Sediment	Foot

SUBSECTION 230: CULVERTS, STORM DRAINS, AND SEWER PIPES

DESCRIPTION OF WORK

230.20: General

This work shall consist of the construction of culvert storm drains, sewer pipes, hereinafter referred to as "Pipe" and flared end sections, in accordance with these specifications and in close conformity with the lines and grades shown on the plans or established by the Engineer.

MATERIALS

230.40: General

Materials shall meet the requirements specified in the following Subsections of Division III, Materials:

Mortar for Pipe Joints	M4.02.15
Jointing Materials for Pipes	M5.01.0
Reinforced Concrete Pipe	M5.02.1
Reinforced Concrete Pipe. Flared Ends	M5.02.2
Corrugated Metal Pipe	M5.03.0
Metal End Sections	M5.03.6
Polymeric Precoated Corrugated Metal Pip	M5.03.8
Corrugated Plastic Pipe	M5.03.10
Corrugated Plastic Flared Ends	M5.03.10
Corrugated Metal Pipe-Arch	M5.04.0
Structural Plate for Pipe and Pipe-Arch	M5.04.2
Smooth Steel Liner Helically Corrugated Shell Metal Pipe	M5.04.3
Ductile Iron Pipe	M5.05.3

CONSTRUCTION METHODS

230.60: General

Excavation and backfill shall conform to the applicable portions of Subsection 140: Excavation for Structures and Subsection 150: Embankment.

230.61: Bedding Pipes

The bedding for the pipe shall be shaped to conform reasonably close to the lower 10% of the pipe and recesses excavated for bells of bell and spigot pipes.

All pipe shall be laid to the specified line and grade, with a firm bearing throughout each length and with bell ends uphill.

230.62: Pipe Joints

The joints of concrete pipe shall be formed by caulking a gasket of jute or oakum into the bell and then filling the remainder of the joint with cement mortar. The invert shall be kept smooth and free of any obstructions. In the case of concrete pipe, the surfaces to be joined shall be thoroughly

cleaned and wetted with water before the joint is made. Corrugated metal pipe and corrugated plastic pipe shall be firmly joined with an approved coupling. The interior surfaces of abutting pipes shall form a smooth grade when pipe laying is completed.

Where watertight joints are required, concrete pipe shall be joined using flexible watertight rubber gaskets conforming to M5.01.0. The pipe ends shall be designed so that the gasket will be confined on all sides and will not support the weight of the pipe. Any alternative joint design must be pre-approved by the Engineer.

In designated areas, as directed, certain joints may be left open to allow for entrance of underground water into the pipeline.

230.63: Structural Plate Pipe and Pipe-Arch

A. Excavation.

(See 140.60: General)

B. Bedding.

The pipe or pipe-arch structure shall be placed on a prepared foundation carefully shaped to fit the lower plate or plates of the structure so that the flow line will conform to the required grade.

The arch structure shall be placed on a foundation as shown on the plans. Each side of the arch shall rest on a galvanized channel, as detailed on the plans, securely embedded in the substructure.

C. Erections.

The plates for the structure shall be assembled according to the manufacturer's assembly instructions. Pipe or pipe-arch structures may be assembled in their final location or adjacent to it, and then placed on the prepared foundation as a complete unit. Arches shall be erected in place upon the prepared substructure. When completed, all bolts shall be effectively tightened.

D. Elongation of Pipe.

All pipe shall be fabricated elliptically so as to increase the vertical diameter 5% and decrease the horizontal diameter 5%. These dimensions shall be subject to manufacturing tolerances.

E. Coating.

The entire outside surface and the inside bottom half of the pipes and the entire outside and inside of the bottom and corner plates of pipe arches shall be covered with a coat of bituminous material conforming to M7.04.01.

When the structure is erected in the final location, the bottom of all plates that are to be in contact with the ground shall be coated and allowed to dry before they are placed in the structure.

For arches, the entire outside surface shall be covered with one coat of bituminous material as specified above. The metal bearing channel shall be filled with an approved asphalt filler to the level of the concrete after erection of the arch and before backfilling is started.

F. Backfilling.

Backfilling requirements shall conform to the provisions of 120.60: General, Paragraph B, 150.60: General, and 150.64: Backfilling for Structures and Pipes.

G. Flared End Sections.

The unit shall be accurately aligned on a prepared bed on the existing ground, or if so directed by the Engineer, on compacted gravel fill.

230.64: Field Testing of Corrugated Plastic Pipe

Installed pipe shall be tested to ensure the maximum vertical deflection of the pipe does not exceed 5% of its base inside diameter. The base inside diameter is defined as the specified nominal diameter minus the AASHTO allowable inside diameter tolerance of 1.5% but not more than ½ in.

A minimum of 20% of the total length of each size of Corrugated Plastic Pipe installed on the project shall be tested. Only mandrel testing shall be used for pipe sizes of 24 in. or less. For pipe sizes greater than 24 in., the Contractor shall have the option to video inspect, and (1) use a mandrel test if a deflection is noted or (2) hand measure, for pipes with a diameter greater than 36 in., to the requirements listed below. Runs of pipe to be tested shall be selected by the Engineer. The failure of any tested pipe shall subject all Corrugated Plastic Pipe of every size to 100% testing, at the discretion of the Engineer.

Deflection tests shall be performed by the Contractor under the direction of the Engineer not sooner than 30 days after completion of installation and compaction of backfill. The pipe shall be cleaned and inspected for offsets and obstructions prior to testing.

Mandrel Test:

- Shall be used for all pipes up to 24 in. nominal inside diameter.
- The mandrel shall be pulled through the pipe by hand to ensure that maximum allowable deflections have not been exceeded.
- The mandrel diameter shall be verified and approved by the Engineer prior to use.
- Use of an unapproved mandrel will invalidate the test.
- If the mandrel fails to pass through the pipe, the pipe will be deemed to be over-deflected.
- The mandrel shall be a rigid device, with odd numbered-legs (9 legs minimum) having an effective length not less than its nominal diameter.
- The mandrel shall be fabricated of steel with pulling rings at each end.
- The mandrel shall be stamped or engraved on some segment other than a runner indicating the nominal size, and mandrel OD.

Video Inspection:

- May be used to determine if a deflection is evident in pipes with a nominal inside diameter greater than 24 in.
- Verification of the actual deflection limits must be accomplished using the mandrel test method or the hand measurement method.
- Provide and use a mobile color video camera and light source to inspect pipes.

- The video camera must be able to be moved inside the pipe barrel and be controlled remotely by the inspector.
- The video camera must have a remote monitor and a recording apparatus to view and record the condition of the installed pipes.
- A copy of the pipe inspection video recording, in an approved format, shall be provided to the Engineer.

Hand Measurement:

- Measure manually any deflections of pipe larger than 36 in. nominal inside diameter.
- Must be done in the presence of the Engineer.

The minimum diameters, based on approximately 95% of base inside diameter at any point along the full length, are as follows:

Table 230.64-1: Maximum Allowable Vertical Deflection of Corrugated Plastic Pipe

Nominal Size (in.)	Allowable Deflection Diameter (in.)
12	11.2
15	14.0
18	16.8
24	22.4
30	28.0
36	33.7
42	39.4
48	45.1
60	56.5

Any pipe deflected beyond acceptable limits shall be uncovered. If not damaged, as determined by the Engineer, the pipe may be reinstalled. Damaged pipe shall not be reinstalled and shall be removed from the work site. No other method or process to reduce or correct deflection shall be acceptable.

230.65: Strutting of Pipe

Strutting shall be used as required to ensure the integrity of the pipe and all costs associated are incidental to the item.

COMPENSATION

230.80: Method of Measurement

Pipes shall be measured in place and the quantity to be paid for shall be the length actually constructed as directed within the limits specified below.

For measurement purposes the end of pipe in closed structures shall be considered at the inside face of the wall and at masonry headwalls it shall be considered to be at the face of the headwall.

Pipe bends for Corrugated Metal pipe shall be in accordance with the standard drawings and the length of pipe sections containing bends shall be measured along the centerline and shall be paid for as straight sections of pipe.

Reinforced Concrete Pipe Flared Ends and Metal End Sections will be measured in place by the unit each, complete and approved.

Trench excavation in excess of 5 ft and rock excavation shall be measured as specified in 140.80: Method of Measurement for Class B Trench Excavation and Class B Rock Excavation respectively.

Structural plate pipe or pipe arches shall be measured in place and the quantity to be paid for shall be the length actually constructed as directed and to the following limits:

For structural plate pipe the length shall be the average of the top and bottom center line length; for pipe arches, the bottom center line length; and for arches, the average of the springing line lengths.

Trench Excavation in excess of 5 ft and Rock Excavation for structural plate pipe, arches and pipe arches shall be measured in accordance with the relevant provisions of 140.80: Method of Measurement for Class B Trench Excavation and Class B Rock Excavation.

Corrugated Plastic Pipe includes testing and all other incidentals necessary to complete the work. All costs incurred by the Contractor attributable to testing and corrective action, including any delays, shall be borne by the Contractor at no cost to the Department.

230.81: Basis of Payment

Pipe culverts, pipe drains and pipe sewers will be paid for at the contract unit price per lineal foot of the kind of pipe required, installed and complete in place. Corrugated plastic pipe shall include Gravel Borrow Type d backfill material.

Reinforced Concrete Pipe Flared Ends and Metal End Sections will be paid for at the contract unit price each for the size and kind of pipe end specified.

Trench excavation for pipe culverts, pipe drains, pipe sewers, structural plate pipe arches and pipe arches greater than a depth of 5 ft and rock excavation will be paid for as specified in 140.81: Basis of Payment for Class B Trench Excavation and Class B Rock Excavation. No payment for trench excavation for pipes will be made within the limits of 1 ft outside the base section of catch basins, manholes or leaching basins.

Trench excavation and backfill for trenches 5 ft or less in depth for pipe arches, pipe culverts, pipe drains, pipe sewers, and structural plate pipe arches shall be included in the various pipe items. Backfill for that part of a trench which is more than 5 ft in depth shall be included in the item for Class B Trench Excavation. If the material for backfill is obtained from borrow it will be paid for at the contract unit price per cubic yard or ton of the kind of borrow required.

Masonry ends and foundations will be paid for at the contract unit price per cubic yard of the kind of masonry required.

Gravel Borrow will be paid in accordance with Subsection 150: Embankment.

230.82: Payment Items

*230.	-Inch Corrugated Metal Pipe ___ Gage	Foot
*230.7-	-Inch Corrugated Metal Pipe End Section	Each
*232.	___ x ___ Inch ACCM Pipe-Arch ___ Gage	Foot
*234.-	-Inch Drainage Pipe-Option	Foot
*238.	Ductile Iron Pipe	Foot
*239.	Structural Plate Pipe	Foot
*240.	Structural Plate Pipe-Arch, ___ Gage	Foot
*241.-	-Inch Reinforced Concrete Pipe Class III	Foot
*242.-	-Inch Reinforced Concrete Pipe Flared End	Each
*243.-	-Inch Reinforced Concrete Pipe Class IV	Foot
*244.-	-Inch Reinforced Concrete Pipe Class V	Foot
*252.-	-Inch Corrugated Plastic Pipe	Foot
*252.1-	-Inch Corrugated Plastic Pipe Flared End	Each
*255.-	Polymeric Precoated Corrugated Metal Pipe	Foot

*Pipe or appurtenance size will be included as part of the item number in order to differentiate between the sizes.

SUBSECTION 258: STONE FOR PIPE ENDS

DESCRIPTION

258.20: General

Stone for pipe ends shall consist of a protective covering of angular shaped stones laid on slopes in front of and around drainage ends to insure protection of the pipe ends and the embankment and shall conform to the Department Standard "Stone for Pipe Ends."

MATERIALS

258.40: General

Stone for pipe ends shall comply with the provisions of M2.02.3: Stone for Pipe Ends.

CONSTRUCTION METHODS

258.60: General

The stone shall be placed to line and grade as shown on the plans or as directed on a prepared bed of embankment material or existing materials. Each stone shall be carefully placed by hand, normal to the slope and firmly bedded thereon. The larger stones shall be placed directly at the drainage end to prevent erosion and displacement. Each stone shall weigh not less than 50 lb nor more than 125 lb and at least 75% of the volume shall consist of stones weighing not less than 75 lb each. The remainder of the stones shall be so graded that when placed with the larger stones, the entire mass will be compact with a minimum percentage of voids and minimum thickness of 6 in.

COMPENSATION

258.80: Method of Measurement

Stone for pipe ends will be measured in place by the square yard. No allowance will be made beyond the dimensions indicated or as directed.

258.81: Basis of Payment

Payment for the above work will be at the contract unit price per square yard complete in place including all excavation, material and labor.

258.82: Payment Items

258. Stone for Pipe Ends .....Square Yard

SUBSECTION 259: CRUSHED STONE FOR BLEEDERS

DESCRIPTION

259.20: General

The work under this item consists of constructing foundation drains, using crushed stone filter material, in accordance with these specifications and in close conformity with the lines and grades shown on the plans or established by the Engineer.

MATERIALS

259.40: General

Crushed Stone shall comply with the provisions of M2.01.0: Crushed Stone and M2.02.4: Modified Rockfill.

CONSTRUCTION METHODS

259.60: General

The trench for crushed stone bleeder shall be excavated to the specified line and grade. The width and the depth shall be as shown on the plans. The sides of the trench shall be vertical.

Crushed stone shall be placed and rough graded after the Special Borrow has been placed but before the subbase or surface course, except as otherwise directed.

COMPENSATION

259.80: Method of Measurement

Measurement of the above work shall be the quantity of Crushed Stone actually used. The weight slips shall be countersigned on delivery by the Engineer, and no weight slip not so countersigned shall be included for payment.

259.81: Basis of Payment

Payment for the above work shall be made at the contract unit price per ton for the quantity of crushed stone actually used, which shall include full compensation for the excavation and all other materials necessary to satisfactorily complete the work.

259.82: Payment Items

259. Crushed Stone for Bleeders ..... Ton

SUBSECTION 260: SUBDRAINS

DESCRIPTION

260.20: General

This work shall consist of constructing subdrains, using pipe, filter fabric and crushed stone filter material in accordance with the plans and these specifications and in close conformity with the lines and grades shown on the plans or established by the Engineer.

MATERIALS

260.40: General

Materials shall meet the requirements specified in the following subsection of Division III, Materials:

Perforated Corrugated Metal Pipe M5.03.1
Porous Concrete Pipe M5.03.11
Crushed Stone M2.01.5
Slot Perforated Corrugated Plastic Pipe M5.03.9
Geotextile Fabric for Subsurface Drainage M9.50.0

260.60: Excavation (See 140.60: General)

The drain trench shall be excavated to the depth designated on the plans or, if directed, to a stratum of impervious material.

Where no structure is to be placed at the ends of the subdrain pipe, the trench shall be excavated a distance of 3 ft beyond the end of the pipe.

The excavation shall proceed in advance of the actual drain construction only to the extent the Engineer directs. The width of the trench for pipe of more than 12 in. in diameter shall be 1 ft greater than the nominal diameter of the pipe. The width of the trench for pipe 12 in. or less in diameter shall be 2 ft.

Where rock is encountered in the excavation, no part of any rock remaining in the trench shall come within 6 in. of any portion of the pipe.

260.61: Laying Pipe

Before any pipe is installed filter fabric shall be placed along the sides and bottom of the trench. The overlap between any adjoining pieces of fabric shall be at least 2 ft. Perforated subdrain pipe shall be laid with the perforations facing up.

260.62: Filling Drain Trench

The pipe shall be laid on a 2-in. bed of crushed stone and the space about, above, and in the 3 ft beyond the ends of the pipe shall be filled with 0.5-in. or 0.75-in. crushed stone.

The Contractor shall be responsible for keeping the backfill material clean and free of objectionable material from a line 1 in. below the flow line of the pipe to the top of the trench.

260.63: Protection of Inlets and Open Outlets

Inlets and open outlets of subdrains shall be covered with a #23 gauge galvanized wire screen of ¼ in. mesh satisfactorily fastened to the pipe.

COMPENSATION

260.80: Method of Measurement

Subdrain pipe shall be measured in place and the quantity to be paid for shall be the length of pipe actually constructed, plus an allowance of 3 ft for open ends.

Trench excavation greater than a depth of 5 ft and rock excavation shall be measured as specified in 140.80: Method of Measurement for Class B Trench Excavation and Class B Rock Excavation, respectively.

260.81: Basis of Payment

Payment for the above work at the contract price per foot will include excavation, pipe, filter fabric, crushed stone and installation complete in place and satisfactory to the Engineer.

Trench excavation greater than 5 ft in depth and rock excavation will be paid for as specified in 140.81: Basis of Payment for Class B Trench Excavation and Class B Rock Excavation, respectively.

260.82: Payment Items

*261.- -Inch Perforated Corrugated Metal Pipe ___ Gage (Subdrain) ..... Foot
*265.- -Inch Pipe Subdrain – Option ..... Foot
*266.- -Inch Porous Concrete Pipe (Subdrain) ..... Foot
*269.- -Inch Slot-Perforated Corrugated Plastic Pipe (Subdrain) ..... Foot

*Pipe size will be added to the item number and description.

SUBSECTION 270: PIPES REMOVED AND RELAID OR STACKED

DESCRIPTION

270.20: General

This work shall consist of removing present pipes, plugging the ends and relaying or stacking them in accordance with these specifications and in close conformity with the lines and grades shown on the plans or established by the Engineer.

MATERIALS

270.40: General

Material for Pipe Joints shall conform to the requirement of 230.40: General.

CONSTRUCTION METHODS

270.60: Removal of Pipe

A trench of sufficient width and depth shall be excavated so that the present pipe can be removed without damage to the pipe. All joints shall then be opened and the pipe removed in its original sectional lengths.

Existing pipe in good condition which is damaged in removing or other handling due to carelessness of the Contractor, shall be replaced with new pipe at the Contractor's expense.

270.61: Relaying

The construction methods for relaying the pipe in its final location shall conform to the requirements of 230.60: General to 230.63: Structural Plate Pipe and Pipe-Arch inclusive. In the case of corrugated metal pipe culverts, the Contractor shall furnish and place new collars and bolts and repair the coating of the pipe as directed.

270.62: Masonry Plugs for Pipe Ends

Masonry plugs shall consist of bricks and mortar to form a watertight seal at the end of the pipe being plugged. The thickness of the plug shall at least be equal to the inside diameter of the pipe being plugged.

270.63: Stacking

The Contractor shall accept and hold entire responsibility for the removal, handling, stacking at a location convenient for removal by the owner, and protection of all pipe until its final removal by others as designated and in accordance with the following:

Any pipe lost or damaged through lack of protection or carelessness by the Contractor shall be replaced with satisfactory pipe at their expense. The Contractor's responsibility will cease upon final acceptance of the work or 60 days from the time a certified notice, with copy to Engineer, is sent by Contractor to owner of material that all material is available for removal.

270.64: Backfilling Trenches

The trench left by the removal of the pipes shall be backfilled in conformance with the relevant provisions of 150.64: Backfilling for Structures and Pipes.

COMPENSATION

270.80: Method of Measurement

Pipes removed and relaid as directed will be measured in place after being relaid and quantity to be paid for shall be the length actually relaid. Any remaining pipe not required to be stacked shall become the property of the Contractor and shall be removed from the work without additional compensation.

Masonry plugs for pipe ends shall be measured in place by the cross-sectional area of the inside of the pipe being plugged.

Pipes removed and stacked, as directed, will be measured as the actual length of pipe removed and stacked in good condition.

Trench excavation greater than a depth of 5 ft and rock excavation will be measured as specified in 148.80: Method of Measurement for Class B Trench Excavation and Class B Rock Excavation, respectively.

270.81: Basis of Payment

Pipes removed and relaid will be paid for at the contract unit price per foot of the kind of pipe required to be removed and relaid, installed and complete in place.

Masonry plugs will be paid for at the contract unit price per square yard complete in place.

Pipes removed and stacked will be paid for at the contract unit price per foot of the kind of pipe required to be removed and stacked.

Field Stone Masonry in Cement Mortar and 3,000 psi, 1.5-inch, 470 Cement Concrete will be paid for at the contract unit price per cubic yard.

Trench excavation for both removing and relaying greater than a depth of 5 ft and rock excavation for relaying will be paid for as specified in 140.81: Basis of Payment for Class B Trench Excavation and Class B Rock Excavation.

Backfill for trenches 5 ft or less in depth shall be included in the various items of pipe. Backfill for that part of a trench which is more than 5 ft in depth shall be included in the item for Class B Trench Excavation.

If borrow material is used for backfilling, it will be paid for at the contract price per cubic yard of the kind of borrow required.

270.82: Payment Items

227.4	Masonry Plug	Square Foot
*270.	Pipe Removed and Relaid	Foot
*271.	Pipe Removed and Stacked	Foot

*Pipe or appurtenance size will be included as part of the item number in order to differentiate between the sizes.

SUBSECTION 280: WATERWAYS

DESCRIPTION

280.20: General

This work shall consist of the construction of waterways in accordance with these specifications and in close conformity with the lines and grades shown on the plans or established by the Engineer.

MATERIALS

280.40: General

Materials shall meet the requirements specified in the following Subsections of Division III, Materials.

Gravel Borrow	M1.03.0 Type b
Hot Mix Asphalt	M3.07.00
Cement Concrete	M4.02.00
Preformed Expansion Joint Filler	M9.14.0
Welded Steel Wire Fabric	M8.01.2
Load Transfer Assembly	M8.14.0
Lubricant	M8.14.0

CONSTRUCTION METHODS

280.60: General

A. Excavation

(See 140.60: General).

B. Foundation.

The gravel may be placed in one layer and compacted (See 401.60: Gravel Sub-base).

280.61: Hot Mix Asphalt Waterways

Bituminous mixture shall be spread in two courses on the prepared gravel base and compacted by tamping or rolling.

280.62: Cement Concrete Paving (Waterways)

The cement concrete shall be mixed, placed, finished, protected and cured in conformity with requirements of Subsection 901: Cement Concrete, except that consolidation of the cement concrete in paved waterways may be accomplished by rodding, without vibration.

COMPENSATION

280.80: Method of Measurement

The actual area of the exposed surfaces will be measured on paved waterways.

280.81: Basis of Payment

The paving of waterways, together with the construction of a gravel foundation, fine grading and compacting, will be paid for at the contract unit price per square yard, respectively, under the item for Hot Mix Asphalt or Cement Concrete Paving, complete in place.

Excavation (except rock) will be paid for at the contract unit price per cubic yard under the item for Class A Trench Excavation as specified in 140.81: Basis of Payment.

Rock Excavation will be paid for at the contract unit price per cubic yard under the item for Class B Rock Excavation if not already paid for under previous rock excavation.

280.82: Payment Items

280. Hot Mix Asphalt Waterway ..... Square Yard
281. Cement Concrete Paving (Waterway) ..... Square Yard

SECTION 300: WATER SYSTEMS

SUBSECTION 301: WATER SYSTEMS

DESCRIPTION

301.20: General

Work under this section shall consist of making alterations in existing municipal water main systems or constructing new sections of existing systems affected by highway and bridge construction. The work includes furnishing and installing new water pipe and appurtenances and removing and resetting existing materials in the same or new locations in accordance with these specifications and in close conformity with the lines and grades shown on the plans or established by the Engineer.

301.21: Workmen

All personnel employed by the Contractor on this work shall be experienced and skilled in water main installation.

301.22: Protection of Underground Structures.

All conduits, pipes or structures uncovered during excavation, whether or not they are shown on the plans, shall be protected, and if damaged by the Contractor shall be repaired by them or the utility company at the expense of the Contractor.

The Contractor shall not abandon existing conduits, pipes or structures without the prior approval of the Engineer.

301.23: Notices

Prior written notice of at least 48 hours shall be given by the Contractor to affected Municipal Water and Fire Departments, with a copy of such notice submitted to the Engineer, before any water main is shut off and in no case shall a gate or hydrant be opened or shut without proper authorization.

MATERIALS

301.40: General

Materials shall meet the requirements specified in the following Subsections of Division III, Materials:

Thrust Blocks
Cement Concrete M4.02.0
Jointing Materials for Pipes M5.01.0
Water Pipe and Fittings
Copper Tubing M5.06.0
Ductile Iron Pipe and Fittings M5.05.3
Insulation and Waterproof Jackets M9.11.0
Cellular Glass M9.11.1
Fiber Glass M9.11.2
Expanded Polystyrene M9.11.3
Urethane M9.11.4
Waterproof Jackets M9.11.5

CONSTRUCTION METHODS

301.60: General

The installation or removal and reinstallation of water systems or parts thereof shall conform to the following construction procedures:

A. Pipe Fittings, etc.

All pipe fittings, valves, hydrants and other heavy accessories shall be carefully handled by the use of hoists or skidways to avoid shock or damage. Pipe handled on skidways shall not be skidded or rolled against pipe already on the ground. The Contractor shall replace or repair, at bis own expense, any materials that have been damaged due to their negligence.

Where pipes are required in less than standard lengths, the cutting shall be done in a neat and workmanlike manner without damage to the pipe.

B. Excavation.

See 140.60: General.

C. Bedding Pipe.

See 230.61: Bedding Pipes.

D. Bridging.

Where required, the Contractor shall provide suitable bridges for traffic to cross open trenches at streets and driveways.

E. Cleaning and Plugging Pipe.

The pipes and fittings shall be thoroughly cleaned before being laid and shall be kept clean until accepted in the finished work. The ends of all uncompleted lines shall be tightly closed with temporary plugs at all times when the pipe laying is not in progress, and no trench water or debris shall be permitted to enter the pipe.

F. Removal of Castings.

In the work of removing hydrants and other castings to be reset, or stacked for the municipality, the castings shall be exposed, care being taken that they are not damaged by excavating or other machinery, the joints shall then be opened and the castings carefully removed.

Any materials damaged during this work due to the Contractor's negligence shall be replaced by the Contractor at their own expense.

G. Laying Pipe.

Proper tools and equipment for the safe and convenient handling and laying of the pipes shall be used. The Contractor shall exercise reasonable caution during their operations in order to avoid damaging the pipes, castings, or fittings and any which are damaged shall be replaced by them at their own expense.

The Contractor shall furnish the necessary pumps and tools to handle any water encountered in the pipe trench, and shall maintain the trench in a satisfactory condition, free from water, during the laying of the pipe. The pipe, after being laid in place, shall not under any circumstances be used as a drain pipe for the trench.

Cast iron pipe sections shall be laid with the bell on the upgrade end. Before laying the pipe, the outside of the spigot and the inside of the bell shall be wire brushed and wiped clean and dry. When placing a length of pipe, the yarning material for the joint shall be held around the bottom of spigot so that it will enter the bell as the pipe is shoved into position.

H. Setting Gates and Hydrants.

Gates and gate boxes shall be set in the pipe lines as directed. Care shall be taken to see that the spigot ends are securely seated in the bell ends. Blocking or supports of a permanent nature shall be placed under each valve to insure against settlement. The blocking or permanent supports shall conform to Owner's Specifications. Each gate shall be tightly closed before being placed in the line and shall remain so until the joints on each side are completely made. Gate boxes shall be set for all gates. They shall be carefully fitted together and to the gate and securely held during backfilling. The earth around them shall be thoroughly tamped in place and the cover set to the finished grade.

New gate and service boxes, and existing gate and service boxes that are designated to be removed and reset or adjusted to line or grade, which are located in roadway pavement areas shall have concrete collars constructed around them. The concrete collars shall conform to the details of design shown in the Department's Standards for Concrete Collars.

Hydrants shall be properly supported and held plumb while the joints are being made and during backfilling. One (1) ft^3 of crushed stone or screened gravel stone shall be placed as directed to drain each hydrant drip. The hydrants shall be satisfactorily braced near the bottom of the stem.

I. Thrust Blocks and Pipe Anchors.

Reaction or thrust blocks of concrete shall be constructed at all tees, plugs, and bends as directed or as detailed on the drawings with 3,000 psi, 1.5-inch, 470 Cement Concrete. The blocks shall be poured against undisturbed original ground and shall be so placed that pipe joints will be accessible

for any possible future repairs. Yokes and tie-rods shall be installed in addition to or in lieu of thrust blocks. Pipe anchors shall be used when and as directed.

J. Testing.

After completion, the trenches shall be partially backfilled leaving the joints exposed for examination, and the pipe line then subjected to a hydrostatic pressure of 50% above the normal operating pressure. The pipe shall be tested between points as designated by the Engineer by slowly filling the test section with water by means of a pump connected to the pipe but not before the pipe has been relieved of air through taps made where required. Any defects in the pipe or joints revealed by this pressure test shall be repaired or replaced and the pipe line again subjected to a hydrostatic pressure test as described above for possible leakage over the allowable limits. Pump, connections, gauges and a measuring device shall be furnished by the Contractor. The pressure test shall be maintained for at least 2 hours during which time all exposed joints, fittings, valves and hydrants will be carefully examined.

No pipe installation will be accepted until the leakage during a 2-hr test period measured by pumping at the specified test pressure from a calibrated container into the section of pipe being tested is less than that determined by the formula:

$$L = \frac{ND\sqrt{P}}{1850}$$

Where:

$L = Allowable\ Leakage\ in\ gallons\ per\ hour$
$N = Number\ of\ joints$
$D = Nominal\ pipe\ diameter\ in\ inches$
$P = Average\ test\ pressure\ in\ pounds\ per\ square\ inch$

Any defective joints, and any defects in new pipe fittings, valves or hydrants revealed during the leakage test or before final acceptance of the project shall be removed and replaced with other new material and again tested until the work is satisfactory, with no additional compensation.

K. Disinfection.

After the testing has been successfully completed, the water mains shall be disinfected in accordance with the AWWA Standard Procedure C601.

L. Adjusting Boxes.

Gate boxes and service boxes shall be adjusted to required grades and shall be securely held during backfilling (see paragraph H).

M. Backfilling.

See 150.64: Backfilling for Structures and Pipes.

N. Installing Insulation and Jacket.

1. General.

Where water pipe is installed or hung on structures, the insulating material shall be fiber glass, cellular glass, expanded polystyrene, or urethane. Section lengths and thickness shall depend on the

pipe size and the recommendations of the insulation manufacturers. When urethane insulating material is used the total thickness shall be not less than 2 in.; when any other type of insulating material is used the total thickness shall be not less than 3 in.

2. Construction Requirements

a. Cellular glass pipe insulation for use on water pipes shall be applied as follows: Insulation shall cover all fittings, flanges and pipe clamps. The pipe shall be covered with the required thickness of cellular glass insulation of the premolded rigid type. It shall be molded and cut to conform to the size and shape of the pipe. All joints shall be tightly butted and sealed with adhesive as recommended by the manufacturer. The cellular glass insulation shall be applied to clean dry pipe surfaces and secured with ¾-in. x 0.015 in. stainless steel strapping spaced 9 in. on center. After insulation is in place, a tack coat of fibrated adhesive mastic shall be applied at the rate of 2 gal per 100 ft^2. Into this, a layer of asphalt coated 20 x 20 mesh glass fabric overlapping all edges at least 3 in. shall be embedded. A second layer of the same fabric shall then be applied together with additional adhesive mastic to completely embed the layer of fabric. Finally, apply another coating of mastic at the rate of 4 gal per 100 ft^2. A weatherproof seal shall be provided at the ends of the insulation. Insulation covering flanges, fittings, and pipe clamps shall be cut to make a tight fit with the pipe insulation overlapping 3 in. on each end.

b. Fiber glass insulation for use on water pipes shall be premolded with an integral vapor barrier jacket and applied as follows: The fiber glass insulation shall be applied to the clean, dry pipe surface. Adjoining sections shall be butted firmly together and taped. The tape shall be composed of a 3-ply system consisting of 1 layer of creped kraft paper, 1 layer of aluminum foil and 1 layer of asphalt impregnated creped kraft paper. The 3 layers shall be tightly bonded together with an asphalt adhesive. The tape shall be applied so that it overlaps the bun joint a minimum of 2 in. on each side. The longitudinal seam of the vapor barrier shall be sealed with a suitable adhesive. All flanges, fittings and pipe clamps shall be insulated with cement applied to the same total thickness as the pipe insulation and covered with 1-in. galvanized wire netting stretched tightly over the surface and wired in place with 16 gage galvanized wire. A weather-proof jacket of 0.020-in.-thick corrugated aluminum shall be placed over the insulation, all edges to lap a minimum of 2 in. Longitudinal joints shall be placed in the most suitable direction for shedding water. An adhesive mastic cement shall be applied to all joints and seams, making them completely water tight. The aluminum jacket shall be secured with 0.75-in. x 0.015-in. stainless steel strapping and stainless-steel clips spaced 12 in. on center.

c. Expanded polystyrene or urethane insulation for use on water pipes shall be premolded and applied as follows: The polystyrene or urethane insulation shall be applied to clean dry pipe surfaces. All joints shall be tightly butted and sealed with a suitable polystyrene or urethane adhesive. The insulation shall be secured with ¾-in. x 0.015-in. stainless steel strapping and corrugated aluminum with integral vapor barrier shall be applied over the insulation, all edges to lap a minimum of 2 in. Longitudinal joints shall be placed in the most suitable direction for shedding water. The jacket shall be secured with ¾-in. x 0.015-in. stainless steel strapping and stainless-steel clips spaced 12 in. on center. A suitable adhesive that is compatible with polystyrene or urethane shall be applied to all joints and seams of the aluminum jacket making them completely watertight. All flanges, fittings and pipe clamps shall be covered with the same insulating material remolded and sized to make a tight fit with the pipe insulation and overlapping the pipe insulation 3 in. on each end. Prior to the application of the aluminum

jacket all open ends of insulation covering flanges, fittings and pipe clamps shall be covered with a layer of 20 x 20 mesh, asphalt coated glass fabric embedded in suitable adhesive mastic cement.

COMPENSATION

301.80: Method of Measurement

Water pipe will be measured in place along the axis of the pipe without deduction for the space occupied by valves, excluding however, the length occupied by new fittings. Where two pipes join, measurement will be made to the intersection of the axes, excluding the length occupied by new cast iron fittings.

Fittings, consisting of bends, tees, caps, wyes, sleeves, reducers, increasers, blow-off fittings and other specials, applies only when new materials are necessary and which are not specifically provided for under other items in the Proposal. Fittings other than new will not be paid separately but only under the applicable foot items. When new fittings are measured for payment under the pound price for Item 308, the length occupied by the fittings will not be measured for payment under the foot items.

The fittings (excluding accessories comprising of Rings, Gaskets, Bolts, Nuts, Washers and Clamps) will be measured by the pound and the quantity to be paid for shall be the weight stated on the invoice of the supplier or the manufacturer's rated weight as listed in the catalog whichever is the lesser.

For new special fittings not listed in the catalog the weight payable will be the invoice weight. The Contractor shall furnish a copy of the Manufacturer's catalog at the start of work. Concrete collars required for gate and service boxes shall be included in the contract unit price for the relevant gate and service box items.

Insulation will be measured by the foot under the applicable water pipe insulation item.

Trench excavation in excess of 5 ft in depth and rock excavation shall be measured as specified in 148.80: Method of Measurement for Class B Trench Excavation and Class B Rock Excavation, respectively.

301.81: Basis of Payment

Water system work will be paid for at the contract unit price under the respective items for the kind of work involved as set forth in the Proposal.

New yokes and tie-rods will be paid for at the contract unit price per pound under Item 309. Payment for fittings other than new will be paid for at the contract unit price per foot under the relevant pipe items.

The prices shall also include all excavation (except rock) to a maximum depth of 5 ft (as measured from the top of the trench to the bottom of the pipe barrel).

Trench excavation greater than 5 ft and rock excavation will be paid for a specified in 140.81: Basis of Payment for Class B Trench Excavation and Class B Rock Excavation.

Backfill for trenches 5 ft or less in depth shall be included in the various items of pipe. Backfill for that part of a trench which is more than 5 ft in depth shall be included in the item for Class B Trench Excavation.

If the material for backfill is obtained from borrow, it will be paid for at the contract unit price per cubic yard of the kind of borrow required.

The prices shall also include all disinfection and testing of the water pipeline system.

Payment for the restoration of surfaces over trenches shall be made at the contract unit price for the kind of materials used.

Thrust blocks, where required, will be paid for at the contract unit price per cubic yard under Item 903, 3,000 psi, 1.5-inch, 470 Cement, Concrete Masonry.

Insulation will be paid for at the contract unit price per foot under Item 373. Water Pipe Insulation, complete in place.

301.82: Payment Items

*302.	Ductile Iron Water Pipe (Rubber Gasket)	Foot
*303.	Ductile Iron Water Pipe (Mechanical Joint)	Foot
309.	Ductile Iron Fittings for Water Pipe	Pound
*313.	Water Main Removed and Relaid	Foot
*315.	Water Main Removed and Stacked	Foot
*347.	Copper Tubing Type K	Foot
*349.	Gate Valve	Each
*350.	Gate and Gate Box	Each
*351.	Gate and Gate Box Removed and Reset	Each
*354.	Gate Box Removed and Reset	Each
*355.	Gate and Gate Box Removed and Stacked	Each
*357.	Gate Box	Each
358.	Gate Box Adjusted	Each
*363.	Corporation Cock	Each
*367.	Cast Iron Plug	Each
*373.	Water Pipe Insulation	Foot
376.	Hydrant	Each
376.2	Hydrant Removed and Reset	Each
376.3	Hydrant Removed and Stacked	Each
381.	Service Box	Each
381.1	Service Box Removed and Reset	Each
381.2	Service Box Removed and Stacked	Each
381.3	Service Box Adjusted	Each
384.	Curb Stop	Each
384.1	Curb Stop Removed and Reset	Each

*Pipe or appurtenance size will be included as part of the item number in order to differentiate between the sizes.

SECTION 400: SUB-BASE, BASE COURSES, SHOULDERS, PAVEMENTS AND BERMS

SUBSECTION 401: GRAVEL SUB-BASE

DESCRIPTION

401.20: General

The gravel sub-base shall consist of approved gravel placed on the subgrade and in close conformity with the lines and grades shown on the plans or established by the Engineer.

MATERIALS

401.40: General

Materials shall meet the requirements specified in the following Subsections of Division III, Materials:

Gravel Borrow.....M1.03.0, (Type a or b)
Processed Gravel.....M1.03.1

CONSTRUCTION METHODS

401.60: Gravel Sub-base

The gravel shall be spread and compacted in layers not exceeding 8 in. in depth, compacted measurement, except the last layer of gravel Sub-base course (conforming to M1.03.0: Gravel Borrow Type a or b, or M1.03.1: Processed Gravel for Subbase) will be 4 in. in depth compacted measurement and all layers shall be compacted to not less than 95% of the maximum dry density of the material as determined by AASHTO T 99 Method C at optimum moisture content as determined by the Engineer. If the material retained on the #4 sieves is 50% or more of the total sample this test shall not apply and the material shall be compacted to the satisfaction of the Engineer. The specific density of the Gravel Sub-base shall be maintained by determining the number of passes of a roller required to produce a constant and uniform density, after conducting a series of tests either using the sand/volume or the nuclear device.

Any stone with a dimension greater than that permitted for the type of gravel specified shall be removed from the sub-base before the gravel is compacted. Compaction shall continue until the surface is even and true to the proposed lines and grades within a tolerance of ⅜ in. above or below the required cross-sectional elevations and to a maximum irregularity not exceeding ⅜ in. under a 10-ft line longitudinally. In locations when the 8 in. of gravel is used as a base for Item 405 this tolerance shall be ¾ in. under a 10-ft line. Any specific area of gravel sub-base which, after being rolled, does not form a satisfactory, solid, stable foundation shall be removed, replaced and recompacted by the Contractor without extra compensation. The gravel foundation for cement concrete surfacing shall be conditioned in accordance with the provisions of 476.61: Preparation of Grade.

COMPENSATION

401.80: Method of Measurement

Gravel for sub-base shall be measured as specified in 150.80: Method of Measurement.

401.81: Basis of Payment

Gravel for the sub-base will be paid for at the contract unit price per cubic yard for Gravel Borrow.

Payment for shaping and compacting of the sub-base as specified herein shall be included in the item of Gravel Borrow.

SUBSECTION 402: DENSE GRADED CRUSHED STONE FOR SUB-BASE

DESCRIPTION

402.20: General

Dense Graded Crushed Stone for Sub-base consist of crusher-run coarse aggregates of crushed stone or gravel and fine aggregates of natural sand or stone screenings uniformly pre-mixed and placed on the sub-grade or sub-base in close conformity with the lines and grades shown on the plans or established by the Engineer.

MATERIALS

402.40: General

Material shall meet the requirements specified in the following Subsection of Division III: Materials Specifications:

Dense Graded Crushed Stone for Sub-base.....M2.01.7

CONSTRUCTION METHODS

402.60: General

Grade control survey shall conform to Subsection 5.07: Construction Survey Control. The Contractor shall furnish, set, and maintain all line and grade stakes.

402.61: Spreading and Compacting

The Dense Graded Crushed Stone shall be spread in layers from self-spreading vehicles equipped with automated grade-controlled equipment. Power graders or conventional self-spreading vehicles may be used only with prior written approval of the Engineer. The Dense Graded Crushed Stone shall be placed to the tolerance as stipulated in Subsection 401: Gravel Sub-Base. Suitable watering devices shall be available at the source of supply and on the project for use as directed by the Engineer to prevent segregation in transit and during spreading and to obtain proper density and stability of the mixture. The specified density of the Dense Graded Crushed Stone shall be maintained by determining the number of passes of a roller are required to produce a constant and uniform density, after conducting a series of tests either using the sand/volume method or the nuclear device.

COMPENSATION

402.80: Method of Measurement

Dense Graded Crushed Stone shall be measured in place, to the limits specified on the plans or as directed by the Engineer, with no percentage added.

402.81: Basis of Payment

Dense Graded Crushed Stone for sub-base will be paid for at the contract unit price per cubic yard or ton complete in place.

402.82: Payment Items

402.	Dense Graded Crushed Stone for Sub-base	Cubic Yard
402.1	Dense Graded Crushed Stone for Sub-base	Ton

SUBSECTION 403: RECLAIMED PAVEMENT FOR BASE COURSE AND/OR SUB-BASE

DESCRIPTION

403.20: General

The work shall consist of producing a stabilized base course and/or sub-base through the recycling of the existing pavement structure and a specified depth of acceptable sub-base material. This combination of pavement and sub-base material is to be uniformly crushed, pulverized and blended, then spread, graded, and compacted to the lines and grades shown on the plans or established by the Engineer.

MATERIALS

403.40: General

All reclaimed material shall conform to the requirements of M1.09.0: Reclaimed Pavement Borrow Material.

Aggregate for Crushed Stone for Blending, used to correct gradation deficiencies, shall conform to the requirements of M2.01.0: Crushed Stone to M2.01.6.

Aggregate for Dense Graded Crushed Stone for Sub-Base shall conform to the requirements of M2.01.7: Dense Graded Crushed Stone for Sub-base.

403.41: Sampling and Pretesting

The Department will take and analyze test pits to the depth to be recycled and provide the following information in the bid proposal for each:

1. The location of the test pit.
2. The depth of existing asphalt pavement material to be recycled.
3. The aggregate gradation of the underlying material to be recycled.

The information supplied is intended to be an indication of the existing conditions and in no way releases the Contractor from the responsibility of fulfilling the requirements of this specification.

Any gradation deficiencies in the existing materials, as indicated by the test pits, shall be corrected by blending the appropriate aggregate size(s) into the mixture.

CONSTRUCTION METHODS

403.60: General

Reclaiming operations shall not be permitted when the existing pavement or sub-base contains frost, when the sub-base is excessively wet as determined by the Engineer, nor when the air or surface temperature is below 40°F.

Reclaiming operations shall not commence before April 15 and shall terminate on or before October 15.

Prior to the start of reclaiming operations, the Contractor shall locate and protect existing drainage and utility structures and underground pipes, culverts, conduits and other appurtenances. The limit of each sequence of the reclamation process shall be 1-mile full width or as directed by the Engineer in order that the placing of pavement structure, up to the binder course, will be completed before beginning the next sequence of roadway reclamation work.

403.61: Equipment

The recycling equipment shall have a positive depth control to ensure a uniform depth of processing. This equipment shall have the ability to process the complete design depth specified into a homogeneous mass. It shall also be capable of crushing all oversize material encountered except ledge, or boulders larger than 8 in. in diameter.

A minimum of 14 calendar days prior to the proposed start of work, the Contractor shall submit in writing to the Engineer for approval, a description of the specific equipment and construction methods to be used in performing the work. The Contractor will be required to demonstrate to the Engineer the ability of the work crew and equipment to produce reclaimed material conforming to specifications at a rate of production consistent with the time allowed under the Contract. A test section shall be constructed approximately 500 ft long and one lane wide and be located within the project limits at a location determined by the Engineer. The forward speed and processing direction (e.g. up cutting vs. down cutting) of the recycling equipment shall be recorded during construction of the test section. Representative samples of the reclaimed material shall be taken from this test section for analysis by the Engineer. Full scale production will not be allowed to commence until the Engineer has reviewed the test results and gives written approval of the equipment and construction methods used in the construction of the test strip.

Failure to meet gradation requirements or an insufficient production rate may be considered cause for rejection of the equipment, the construction methods, or both. The Contractor must then submit, in writing, the proposed changes in equipment and/or construction methods and either construct another test section or reconstruct the original section, as determined by the Engineer. This procedure may be repeated until acceptable results are obtained, at no additional compensation.

Failure to meet gradation requirements due to improper equipment or construction methods, shall not constitute a reason for any additional compensation for the import and blending of any aggregate to meet the deficiencies.

Approval of equipment includes the speed and processing direction it was operated at during construction of the test section. Therefore, the same operating speed and processing direction must be maintained during normal production. Changes in the equipment's operating speed and/or processing direction may only be made with the Engineer's written approval.

At least one vibratory roller shall be used on each reclaimed surface, and shall have a compacting width of not less than 5 ft. Each roller shall have a gross weight of not less than 15 tons.

Approved equipment shall be maintained in satisfactory working condition at all times.

403.62: Structure Lowering and Raising

All work shall be done in accordance with the applicable provisions of Subsection 220: Adjustment, Rebuilding and Remodeling of Drainage Structures.

All drainage, utility, and municipality structures are to be referenced and lowered to a minimum depth 6 in. below the bottom of the proposed reclaimed base course. Lowered structures shall be covered with steel plates conforming to the requirements specified in Subsection 7.09: Public Safety and Convenience. The voids remaining after the structures have been lowered are to be filled with a suitable material as determined by the Engineer. The Contractor will be responsible for the coordination with the respective utility companies for the lowering and raising of privately-owned structures and gate boxes. The reclaiming operation shall not begin until all structures and boxes are lowered.

It shall be the Contractor's responsibility to maintain drainage functioning properly in the areas under construction up to the time when the final system is put into use. All structures lowered will be raised to the binder grade elevation upon placement of the binder course material for that section. Adjustment of the castings to final grade will not be allowed until the Engineer approves the placement of hot mix asphalt top course material throughout the project.

Any drainage structure found to be deteriorated below the plated depth shall be rebuilt from the bottom of the deterioration to the plated depth.

403.63: Reclaiming Operations

Prior to the start of reclamation, the existing pavement shall be swept with a power sweeper to remove all trash, sand, dirt, organic matter, and other undesirable material, to the satisfaction of the Engineer.

Also, the existing pavement shall be sawcut full depth within the areas where the adjacent surface is to be protected (curb, side streets, etc.) as shown on the plans and/or as directed by the Engineer.

The Contractor shall reclaim only that area of pavement that can be processed and compacted by the end of the same working day, at which time it must be opened to traffic, with the Engineer's approval. In any section, reclamation work shall be done on one-half the road width at a time. One-way traffic will be allowed only during working hours with traffic police present. Two-way traffic shall be maintained at all other times. Suitable ramping shall be in place at the beginning and end of

each work zone to allow for smooth and safe travel. This shall be considered incidental to the work for this item. The required density shall be maintained until the hot mix asphalt pavement has been placed. Any imperfections discovered prior to the placement of hot mix asphalt shall be repaired, as directed by the Engineer, at no additional compensation.

The total thickness of the pavement structure and uppermost portion of the sub-base layer shall be recycled to the design depth specified on the typical sections. The Engineer shall perform a sieve analysis of the reclaimed material for every 5,000 yd^2 of material processed or as often as conditions may require as determined by the Engineer. Test results shall be made available to the Contractor. If conditions warrant, the Engineer may stop work until the required test results become available. If the Engineer directs, due to grading deficiencies in the existing materials as indicated by the test pits, the appropriate crushed stone aggregate sizes shall be blended with the recycled material to produce a uniform mixture meeting the gradation requirements. Additionally, if the Engineer directs, dense graded crushed stone shall be added for volume purposes.

Any required modifications to the remaining sub-base such as, but not limited to, cuts, fills, and grade realignment shall be made. Existing unsuitable material shall be removed to the lines and grades established by the Engineer and replaced with a suitable material, as determined by the Engineer. Existing surplus reclaimed material shall be used, when available, at no additional compensation.

All unsuitable material and/or excess reclaimed material shall become the property of the Contractor to be properly disposed of outside the project limits.

403.64: Compaction and Dust Control

The reclaimed material shall be rolled, compacted and fine graded to the specified cross section(s) and/or grades as shown or as established by the Engineer.

The reclaimed base course shall be tested for compaction and smoothness and accuracy of grade in accordance with the applicable provisions of 401.60: Gravel Sub-base. The required density shall be measured by a Nuclear Density Gauge supplied by the Department. If any portions are found to be unacceptable by the Engineer, such portions shall be reprocessed, regraded, and recompacted until the required smoothness and accuracy are obtained.

At the end of each day's progress, the Contractor shall apply Calcium Chloride in accordance with the applicable provisions of Subsection 440: Roadway Dust Control. Water for roadway dust control shall be applied as directed.

A grader, roller, and water wagon shall be maintained on the project site during the reclamation process. The Contractor shall submit to the Engineer, in writing, a 24-hour availability telephone number for any emergency maintenance dictated by the weather conditions or as determined by the Engineer, for repair, compaction, and dust control.

COMPENSATION

403.80: Method of Measurement

Reclaimed Base Course shall be measured in place, to the limits specified on the plans or as directed by the Engineer. No deductions will be made for surface structures. The lowering and the plating of

gates and structures will be considered incidental to this Item and no additional compensation will be allowed.

Structures raised from the plated depth to an intermediate depth of approximately 8 in. below finished grade, as determined by the Engineer, shall be plated and shall be measured by the unit each as a Drainage Structure Remodeled.

Structures adjusted from the intermediate depth to finished grade shall be measured by the unit each as a Drainage Structure Adjusted.

Structures rebuilt shall be measured by the average height in feet and tenths of feet from the bottom of the deterioration to the plated depth. Structures damaged below the plated depth, due to the Contractors negligence, shall be measured and deducted from the depth measurement. Raising the structure from the plated depth will be measured as stated above for a remodeled unit.

403.81: Basis of Payment

The accepted quantity of reclamation as measured above shall be paid for at the contract unit price bid per square yard. This unit price shall include all compensation for crushing, pulverizing, blending, spreading, grading, sawcutting the existing asphalt pavement at the direction of the Engineer, compacting, test section construction, blending with aggregate, moving the processed material to allow for modifications to the remaining sub-base and/or subgrade, moving reclaimed material from one location to another within the project and any incurred costs resulting from the Contractor's decision to process off site.

The unit price bid shall also include compensation for all costs associated with the removal of the castings and the referencing, lowering, and plating of the structures. It shall also include full compensation for all labor, tools, equipment, materials, and all incidental work necessary to complete the work as specified.

Removal and disposal of unsuitable material, surplus reclaimed material, or any sub-base/subgrade material necessary for grade changes shall be paid for at the contract unit price per cubic yard for Item 120.1, Unclassified Excavation.

Special borrow required to be placed under the reclaimed material shall be paid for at the contract unit price per cubic yard for Item 150.1, Special Borrow.

Grading and compacting the sub-base and/or subgrade resulting from the removal of unsuitable material shall be paid for at the contract unit price per square yard for Item 170., Fine Grading and Compacting.

Adjustment of drainage structures shall be paid for at the contract unit price each for Item 220., Drainage Structure Adjusted.

Rebuilding of drainage structures shall be paid for vertically at the contract unit price per foot for Item 220.2, Drainage Structure Rebuilt.

Raising of lowered structures shall be paid for at the contract unit price each for Item 220.5 Drainage Structure Remodeled.

Aggregate for providing added volume shall be paid for at the contract unit price per ton or Item 402.1, Dense Graded Crushed Stone for Sub-base.

Aggregate to correct gradation deficiencies shall be paid for at the contract unit price per ton for Item 403.1, Crushed Stone for Blending.

Calcium Chloride for dust control shall be paid for at the contract unit price per pound for Item 440., Calcium Chloride for Roadway Dust Control.

Water for dust control shall be paid for at the contract unit price per 1,000 gallons for Item 443., Water for Roadway Dust Control.

403.82: Payment Items

403.	Reclaimed Pavement for Base Course and/or Sub-base	Square Yard
403.1	Crushed Stone for Blending	Ton

SUBSECTION 404: RECLAIMED PAVEMENT BORROW MATERIAL

DESCRIPTION

404.20: General

Reclaimed pavement borrow material shall be used for base course and sub-base areas. The material shall be pre-mixed and placed on the sub-grade or sub-base in close conformity with the lines and grades established by the Engineer.

MATERIALS

404.40: General

Material shall meet the requirements of M1.09.0: Reclaimed Pavement Borrow Material.

CONSTRUCTION METHODS

404.60: General

The reclaimed pavement borrow material shall be spread and compacted in layers not exceeding 8 in. in depth, compacted measurement, except the last layer of reclaimed pavement borrow material (conforming to M1.09.0: Reclaimed Pavement Borrow Material) will be 4 in. in depth compacted measurement. The specified density of the Reclaimed Pavement Borrow Material shall be maintained by determining the number of passes of a roller that are required to produce a constant and uniform density, after conducting a series of tests either using the sand/volume method or the nuclear device. The Reclaimed Pavement Borrow Material shall be placed to the tolerance as stipulated in Subsection 401: Gravel Sub-Base.

COMPENSATION

404.80: Method of Measurement

Reclaimed Pavement Borrow Material shall be measured in place, to the limits specified on the plans or as directed by the Engineer, with no percentage added.

404.81: Basis of Payment

Reclaimed Pavement Borrow Material will be paid for at the contract unit price per cubic yard complete in place.

404.82: Payment Items

404.5 Reclaimed Pavement Borrow Material ..... Cubic Yard

SUBSECTION 415: PAVEMENT MILLING

DESCRIPTION

415.20: General

This work shall consist of milling and removal of existing HMA pavement courses from the project by the Contractor. Milling shall be performed in conformity with the limits, line, grade, and typical cross-section shown on the plans. The milling operation shall be categorized as either Standard Milling, Fine Milling, Micro Milling, or Bridge Pavement Milling as defined in Table 415.20-1. The milled material shall become the property of the Contractor.

Table 415.20-1: Pavement Milling Types

Type	Tooth Spacing (in.)	Cut Depth (in.)	Ridge to Valley Depth (in.)
Pavement Standard Milling	⅝	0 to 8	$^{5}/_{16}$
Pavement Fine Milling	⅜	0 to 2 ½	$^{3}/_{16}$
Pavement Micro Milling	¼	0 to 1 ½	$^{1}/_{16}$
Bridge Pavement Milling	⅜	0 to 1	$^{3}/_{16}$

CONSTRUCTION PROCEDURES

415.40: General

The Contractor shall provide satisfactory QC of the milling operation as further outlined in 415.61: Milled Surface Inspection. The specific QC procedures to be implemented shall be identified in the Contractor's QC Plan for HMA, submitted in accordance with the requirements of Subsection 450: Hot Mix Asphalt Pavement. The Contractor shall present and discuss in sufficient detail, the QC information and activities related to milling at the Construction Quality Meeting required under Subsection 450: Hot Mix Asphalt Pavement.

415.41: Milling Equipment Requirements

The milling equipment shall be self-propelled with sufficient power, traction, and stability to remove the existing HMA pavement to the specified depth and cross-slope. The milling machine shall be capable of operating at a minimum speed of 10 ft per minute, designed so that the operator

can always observe the milling operation without leaving the control area of the machine, and be equipped with the following:

(a) A built-in automatic grade control system that can control the longitudinal profile and the transverse cross-slope to produce the specified results.
(b) Longitudinal controls capable of operating from any longitudinal grade reference, including string line, 30-ft ski minimum, 30-ft mobile string line minimum, or a matching shoe.
(c) The transverse controls shall have an automatic system for controlling cross-slope at a given rate.
(d) Cutting heads able to provide a minimum 6 ft cutting width and a 0 to 4 in. deep cut in one pass. The teeth on the revolving cutting drum must be continually maintained and shall be replaced as warranted to provide a uniform pavement texture.
(e) An integral pickup and conveying device to immediately remove milled material from the roadway and discharge the millings into a truck, all in one operation.
(f) Safety devices such as reflectors, headlights, taillights, flashing lights and back up signals so as to operate safely in both day and night.
(g) A means of effectively limiting the amount of dust escaping from the milling and removal operation in accordance with local, State, and Federal air pollution control laws and regulations.
(h) Whenever the milling operations are being conducted between the hours of sunset and sunrise, the Contractor shall provide mobile lighting system(s) in accordance with 415.43: Mobile Lighting for Milling and Sweeping Equipment.
(i) Bridge pavement milling equipment drums shall not exceed 5 ft in width and a gross operating weight of 45,000 lb.

When milling smaller areas or areas where it is impractical to use the above described equipment, the use of a smaller or lesser-equipped milling machine may be permitted when approved by the Engineer.

415.42: Sweeper Equipment

The Contractor shall provide a sufficient number of mechanical sweepers to ensure that the milled surface is free of millings and debris at the end of each day's milling operations. Each sweeper shall be equipped with a water tank, spray assembly to control dust, a pick-up broom, a dual gutter broom, and a dirt hopper. The sweepers shall be capable of removing millings and loose debris from the textured pavement.

415.43: Mobile Lighting for Milling and Sweeping Equipment

Whenever milling operations are being conducted between the hours of sunset and sunrise, the Contractor shall provide mobile lighting system(s) attached to each piece of mobile milling equipment, including milling machines and mechanical sweepers but shall not include trucks used to transport materials and/or personnel to the work zone or other vehicles that are continually moving in and out of the work zone.

Mobile lighting systems attached to milling equipment shall be in addition to work zone lighting requirements specified in Subsection 850: Traffic Controls for Construction and Maintenance Operations.

Lighting attached to each machine shall be capable of providing a minimum of 1 fc measured 60 ft in front of and behind the equipment. Lighting measurements shall be per Subsection 850: Traffic Controls for Construction and Maintenance Operations. Light fixtures shall be balloon-style or otherwise diffused to minimize glare. Flood lights without diffusers shall not be permitted.

No part of the mobile lighting system shall exceed a height 13 ft above the pavement. In areas with constrained vertical clearances the height may further be limited by the Engineer.

Existing street or highway lighting shall not eliminate the requirement for the Contractor to provide lighting.

415.44: Milling Operations

The Contractor shall coordinate milling and paving operations to minimize the exposure of milled surfaces to traffic. The Contractor shall ensure that milled surfaces are paved in a timely manner to avoid damage to the pavement structure. Any damage to the pavement structure resulting from extended exposure of the milled surface to traffic shall be repaired as directed by the Engineer at the Contractor's expense.

The milling operations shall not proceed more than 3 miles ahead of the paving operations. Under no circumstances shall the milled surface be left exposed to traffic for a period exceeding 7 calendar days. The Engineer may allow the Contractor to adjust the limits of milling production when necessary.

The existing pavement shall be removed to the average depth shown on the plans, in a manner that will restore the pavement surface to a uniform cross-section and longitudinal profile. The longitudinal profile of the milled surface shall be established using a 30-ft mobile ski, mobile string line, or stationary string line. The cross-slope of the milled surface shall be established by a second sensing device or by an automatic cross-slope control mechanism. The Contractor will be responsible for providing all grades necessary to remove the material to the proper line, grade, and typical cross-section shown on the plans. The requirement for automatic grade or slope controls may be waived by the Engineer in locations warranted by the situation, including intersections and closely confined areas.

The Engineer may adjust the average milling depth specified on the plans by ¾ in. during each milling pass at no additional payment to minimize delamination of the underlying pavement course or to otherwise provide a more stable surface. If delamination or exposure of concrete occurs when milling an HMA pavement course from an underlying Portland Cement Concrete pavement, the Contractor shall cease milling operations and consult the Engineer to determine whether to reduce the milling depth or make other adjustments to the operation.

For projects on controlled access highways, when milling the high-speed lane or low-speed lanes, the initial pass of the milling machine shall be parallel and adjacent to the face of all drainage structures. This will allow the milling operation to proceed in a straight line relative to the travel lane and not require the machine to turn or jump over structures in order to avoid them. The high-speed shoulder shall be milled after the high-speed lane.

415.45: Bridge Pavement Milling Operations

The Contractor shall mill bridge pavement to the depth specified in the contract while minimizing impacts, vibration, loading and other damage to the bridge. The Contractor shall make every effort to minimize damage to the bridge deck and joints by reducing cut depths, minimizing forward milling speed, and limiting the equipment size. Bridge pavement milling shall adhere to the following:

(a) Milling over bridge decks may occur only with the direct oversight of the Engineer and shall not proceed without the Engineer present.
(b) Milling speed shall not exceed 20 ft per minute.
(c) Milling cut depth shall not exceed 1 in. per pass. Milling depths exceeding 1 in. will require multiple passes.
(d) Pavement milling depth shall be pre-set on the machine. Automation will not be permitted to vary the depth of cut or modify the profile without the Engineer's consent.
(e) Milling operations shall cease immediately upon exposure of the cement concrete deck and shall not proceed without approval of the Engineer.

415.46: Protection of Inlets and Utilities

Throughout the milling operation, protection shall be provided around existing catch basin inlets, manholes, utility valve boxes, and any similar structures. Any damage to such structures as a result of the milling operation is the Contractor’s responsibility and shall be repaired at the Contractor’s expense. To prevent the infiltration of milled material into the storm sewer system the Contractor shall take special care to prevent the milled material from falling into the inlet openings or inlet grates. Any milled material that falls into inlet openings or inlet grates shall be removed at the Contractor’s expense.

415.47: Vertical Faces

All permanent limits of the milled area shall be sawcut or otherwise neatly cut by mechanical means to provide a clean and sound vertical face. No vertical faces, transverse or longitudinal, shall be left exposed to traffic. If any vertical face is formed in an area exposed to traffic a temporary paved transition with a maximum 12:1 slope shall be established. If the milling machine is used to temporarily transition the milled pavement surface to the existing pavement surface, the temporary transition shall be constructed at a maximum 12:1 slope.

415.48: Opening to Traffic

Prior to opening a milled area to traffic, the milled surface shall be thoroughly swept with a mechanical sweeper to remove all remaining millings and dust. This operation shall be conducted in a manner so as to minimize the potential for creation of a traffic hazard and to comply with local, State, and Federal air pollution control laws and regulations. Any damage to vehicular traffic as a result of milled material becoming airborne is the responsibility of the Contractor and shall be repaired at the Contractor’s expense. Temporary pavement markings shall be placed in accordance with the provisions of 850.64: Temporary Pavement Markings and Temporary Raised Pavement Markers.

CONTRACTOR QUALITY CONTROL

415.60: General

The Contractor shall provide a QC System adequate to ensure that all workmanship meets the quality requirements herein. The Contractor shall provide qualified QC personnel and perform QC inspection, data analysis, corrective action (when necessary), and documentation as outlined further below. QC activities related to the milling operation shall be addressed in the Contractor's QC Plan for HMA Pavement in accordance with 450.61: Contractor Quality Control Plan.

415.61: Milled Surface Inspection

The milled surface shall provide a satisfactory riding surface with a uniform textured appearance. The milled surface shall be free from gouges, excessive longitudinal grooves and ridges, oil film, and other imperfections that are a result of defective equipment, non-uniform milling teeth, improper use of equipment, or otherwise poor workmanship. Any unsatisfactory surfaces produced shall be corrected by re-milling at the Contractor's expense.

The Contractor shall perform QC inspection of all work items addressed under Subsection 415: Pavement Milling as further specified in Table 415.61-1. Inspection activities during milling of HMA pavement may be performed by qualified Production personnel (e.g. Skilled Laborers, Foremen, Superintendents). However, the Contractor's QC personnel shall have overall responsibility for QC inspection. The Contractor shall not rely on the results of Department Acceptance inspection for QC purposes. The Engineer shall be provided the opportunity to monitor and witness all QC inspection.

The quality of each milled pavement surface will be inspected and evaluated on the basis of Lots and Sublots. A Lot is defined as an isolated quantity of work which is assumed to be produced by the same controlled process. A Lot shall constitute no greater than the entire milled surface area on the project completed within the same construction season using the same milling process.

The milled surface of each travel lane shall be divided into longitudinal Sublots of 500 ft. The Contractor shall perform a minimum of 1 random QC measurement within each Sublot with a 10-ft straightedge in the transverse direction across the milled surface. Additional selective QC measurements within each Sublot will be performed as deemed necessary by the QC personnel. All QC inspection results shall be recorded on NETTCP IRFs.

The milled surface shall have a texture such that the variation from the edge of the straightedge to the top of ridges between any 2 ridge contact points shall not exceed ⅛ in. The difference in height from the top of any ridge to the bottom of the valley adjacent to that ridge shall not exceed the values specified in Table 415.61-1. Any point in the surface not meeting these requirements shall be corrected as directed by the Engineer at the Contractor's expense.

In isolated areas where surface delamination between existing HMA layers or a surface delamination of HMA on Portland Cement Concrete causes a non-uniform texture to occur, the straightedge surface measurement requirements stated in the preceding paragraph may be waived by the Engineer.

Table 415.61-1: Minimum QC Inspection of Milling Operations

Inspection Component	Attributes Inspected	Minimum Inspection Frequency	Point of Inspection	Inspection Method
Equipment	As specified in QC Plan	Per QC Plan	Per QC Plan	Per QC Plan
Environmental Conditions	Protection of Inlets & Utilities	Per QC Plan	Existing Surface	Visual Check
	Removal of Millings & Dust	Per QC Plan	Milled Surface	Visual Check
Materials	n/a	n/a	n/a	n/a
Workmanship	Milling Depth	Per QC Plan	Milled Surface	Check Measurement
	Cross-Slope & Profile	Once per 500 ft per milled lane	Milled Surface	Check Measurement
	Uniform Surface Texture	Per QC Plan	Milled Surface	Visual Check
	Milled Surface Roughness	Once per 500 ft per milled lane	Milled Surface per 415.61: Milled Surface Inspection	10-ft Standard Straightedge
	Sawcut Limit Vertical Face	Per QC Plan	Sawcut Limits	Visual Check

415.62: Control Strip

The Contractor shall mill a control strip prior to proceeding to full milling operations. The control strip shall be 500 ft minimum in length with a uniformly textured surface and cross-slope and meet the requirements of 415.61: Milled Surface Inspection. In the event the control strip does not conform to the milled surface requirements, it shall be corrected, and an additional control strip shall be required by the Engineer.

DEPARTMENT ACCEPTANCE

415.70: General

The Department is responsible for performing all Acceptance activities and making the final Acceptance determination for each milled pavement surface. The Department's Acceptance System will include monitoring the Contractor's QC activity and performing Acceptance inspection in order to determine the Quality and corresponding payment for each Lot.

415.71: Milled Surface Inspection

The Engineer will perform Acceptance inspection of all work items addressed under Subsection 415: Pavement Milling as further specified in Table 415.71-1.

The Engineer will randomly inspect a minimum of 25% of the Sublots. Additional selective Acceptance measurements within each Sublot will be performed as deemed necessary by the Engineer. All Acceptance inspection results will be recorded on NETTCP IRFs.

The milled surface shall meet the requirements of 415.61: Milled Surface Inspection.

Table 415.71-1: Department Acceptance Inspection of Milling Operations

Inspection Component	Attributes Inspected	Minimum Inspection Frequency	Point of Inspection	Inspection Method
Materials	n/a	n/a	n/a	n/a
Workmanship	Milling Depth	25% of Sublots	Milled Surface	Check Measurement
	Cross-Slope & Profile	25% of Sublots	Milled Surface	Check Measurement
	Uniform Surface Texture	25% of Sublots	Milled Surface	Visual Check
	Milled Surface Roughness	25% of Sublots	Milled Surface per 415.61: Milled Surface Inspection	10-ft Standard Straightedge
	Sawcut Limit Vertical Face	25% of Sublots	Sawcut Limits	Visual Check

COMPENSATION

415.80: Method of Measurement

All pavement milling will be measured for payment by the number of square yards of area from which the milling of existing HMA pavement has been completed and the work accepted. No area deductions will be made for minor un-milled areas such as catch basin inlets, manholes, utility boxes and any similar utility structures.

Bridge Pavement Milling will be measured for payment by the number of square yards of area from which the milling of existing bridge surface has been completed and the work accepted. No additional compensation will be provided for multiple passes. No area deductions will be made for minor un-milled areas such as bridge joints, catch basin inlets, manholes, utility boxes, and any similar utility structures.

415.81: Basis of Payment

All pavement milling of existing HMA pavement will be paid for at the contract unit price per square yard. This price shall include all QC activity related to the milling operation, all equipment, tools, labor, incidental materials, and removal and disposal of milled material. No additional payments will be made for multiple passes with the milling machine to remove the existing HMA surface to the grade specified.

The work shall also include:

- Milling of existing concrete repair materials at grade.
- Providing protection to underground utilities from the vibration of the milling operation.
- Sawcutting milled limits; installing and removing any temporary transition.

- Performing handwork removal of existing pavement and providing protection around bridge joints, catch basin inlets, manholes, utility valve boxes and any similar structures.
- Furnishing a sweeper and sweeping after milling.
- Removing and disposing of millings.
- Repairing surface defects as a result of the Contractor's negligence.

415.82: Payment Items

415.1	Pavement Standard Milling	Square Yard
415.2	Pavement Fine Milling	Square Yard
415.3	Pavement Micro Milling	Square Yard
415.4	Bridge Pavement Milling	Square Yard

SUBSECTION 430: CEMENT CONCRETE BASE COURSE

DESCRIPTION

430.20: General

Cement concrete base course shall be constructed in one course on the prepared sub-base in accordance with these specifications and in close conformity with the lines and grades shown on the plans or established by the Engineer.

MATERIALS

430.40: General

Materials shall meet the requirements specified in the following Subsections of Division III, Materials:

*4,000 psi, 1.5 to 3/4 inch, Cement Concrete	M4.02.00
Preformed Joint Filler	M9.14.0
Hot Applied Crack Sealer	M3.05.2

* When specified, High Early Strength Cement Concrete Base Course shall contain High Early Strength Portland Cement (Type III) meeting AASHTO M 85 Standard Specification for Portland Cement or Accelerating Chemical Admixtures (Type C or Type E) meeting AASHTO M 194 Standard Specification for Chemical Admixtures and listed on the MassDOT Qualified Construction Materials List (QCML) for Concrete Admixtures.

CONSTRUCTION METHODS

430.60: General

The cement concrete base course may be constructed by the Slip-Form Method or the Fixed-Form Method.

Equipment and tools necessary for handling materials and performing all parts of the work shall be approved by the Engineer as to design, capacity, and mechanical condition.

Grade control survey and staking shall conform to Subsection 5.07: Construction. The Contractor shall furnish, set, and maintain all line and grade stakes for grading and paving.

430.61: Side Forms

The forms where required shall be an approved wood or metal type, of a width equal to the depth of the concrete, true to line, free from warp and of sufficient strength, when staked, to resist the pressure of the concrete without springing and so designed that the various sections may be fastened together in such a manner as to prevent the vertical or horizontal movement of the ends.

The forms shall be jointed neatly and tight, shall be set true to line and grade, well staked and braced, and shall have uniform bearing on the sub-base through their entire length. In general the setting of forms shall proceed at least 500 ft in advance of the mixing and placing of concrete. The forms shall be thoroughly cleaned before any concrete is placed against them and shall be made tight to prevent the leaking of mortar from the concrete.

430.62: Fine Grading

The fine grading of the foundation shall conform to 476.61: Preparation of Grade.

430.63: Joints

The Contractor shall construct weakened plane transverse contraction joints in the concrete base course every 30 to 50 ft or as shown on the plans. These joints shall consist of surface slots constructed in accordance with the requirements of 476.68: Joints, Paragraph C, for transverse contraction joints.

Expansion joints shall be formed about all structures and features projecting through or into the pavement and between the pavement slab and adjacent curbing. Such joints shall be ½ in. in width and shall be filled with preformed joint filler as specified in 430.40: General and sealed with joint filler compound as specified in 430.40: General in the same manner as specified for transverse expansion joints in 476.68: Joints, Paragraph B. There will be no additional compensation for joints.

430.64: Placing Concrete

Concrete shall be placed on a moist, firm and smooth sub-base in accordance with the requirements of 476.64: Placing Concrete except that it shall be placed in one layer.

430.65: Finishing Concrete

The surface of the concrete shall be struck off with a template shaped so as to leave the concrete with a smooth, even contour surface and crown as shown on the plans and in the typical cross section. The template shall be so constructed that it shall have sufficient strength to retain its shape under all working conditions. This template shall be moved with a longitudinal and crosswise motion and always in the direction in which the work is progressing. The surface of the concrete shall be finished to the elevations, contours and crowns required with a tolerance allowance of ¼ in. in 10 ft.

The surface of the concrete shall be made free of footprints, ruts, depressions or other imperfections and shall then be lightly broomed, as directed, with approved stable or wire brooms.

430.66: Protection and Curing

The pavement shall be protected and cured as required in 476.71: Curing except that membrane compounds not compatible with bituminous materials shall not be used.

COMPENSATION

430.80: Method of Measurement

Cement concrete base course will be measured in place by the square yard conforming to the length, width and depth required by the plans or as directed. The Contractor shall have no claim for extra if thickness of pavement exceeds that shown on the plans or as directed.

430.81: Basis of Payment

Standard cement concrete base course will be paid for at the contract unit price per square yard under the item for Cement Concrete Base Course.

High early strength concrete base course will be paid for at the contract unit price per square yard under the item for High Early Strength Cement Concrete Base Course.

The price paid per square yard shall also include all sprinkling or treating the roadway to keep down dust.

430.82: Payment Items

430. Cement Concrete Base Course.....Square Yard
431. High Early Strength Cement Concrete Base Course .....Square Yard

SUBSECTION 440: ROADWAY DUST CONTROL

DESCRIPTION

440.20: General

This work: shall consist of furnishing and applying approved dust control material to the surface of the subgrade or elsewhere as directed in accordance with these specifications.

MATERIALS

440.40: General

Calcium Chloride shall meet the requirements of M9.01.0: Calcium Chloride.

CONSTRUCTION METHODS

440.60: General

The required material shall be properly applied where directed by the Engineer and distributed uniformly at the rate specified or ordered. The means of distribution shall depend upon the kind of material used, and the method and equipment used shall be satisfactory to the Engineer. The number and frequency of applications shall be as determined by the Engineer.

440.61: Treatment with Calcium Chloride

Calcium chloride shall be uniformly applied at the rate of 1 ½ lb per yd² or at any other rate as directed by means of a mechanical spreader, or other approved methods.

440.62: Treatment with Water

Water shall be applied at locations at such times, and in the amount as directed by the Engineer. Quantities of water wasted or applied without authorization will not be paid for.

Watering equipment shall consist of pipelines, tanks, tank trucks, or other devices, approved by the Engineer, which are capable of applying a uniform spread of water over the surface. A suitable device for a positive shut-off and for regulating the flow of water shall be located so as to permit positive operator control.

COMPENSATION

440.80: Method of Measurement

Calcium chloride will be measured by the pound.

Water will be measured for payment by the number of M. Gallons (1,000 gallons). The water will be measured in tanks or tank trucks of predetermined capacity, or by means of satisfactorily installed meters. Any and all measuring devices shall be furnished by the Contractor.

440.81: Basis of Payment

Calcium chloride will be paid for at the contract unit price per pound under the item for Calcium Chloride for Roadway Dust Control, complete in place.

Water will be paid for at the contract price per M. Gallons for Water for Roadway Dust Control which price shall include all water, labor, tools and equipment required to furnish and measure the water applied to surfaces designated by the Engineer and at the times specified.

440.82: Payment Items

440. Calcium Chloride for Roadway Dust Control.....Pound
443. Water for Roadway Dust Control.....M. Gallons

SUBSECTION 445: SHOULDERS

DESCRIPTION

445.20: General

Shoulders shall be constructed of approved materials in accordance with these specifications and in conformity with the lines, grades and typical cross sections shown on the plans.

Shoulders shall be composed of excavated material or borrow of the kind required or as shown on the plan.

Where shown on the plans, the top portions of shoulders shall be paved with surfacing material of the kind specified.

MATERIALS

445.40: General

Materials shall meet the requirements specified in the following Subsections of Division III, Materials.

Ordinary Borrow.....M1.01.0
Gravel Borrow.....M1.03.0 Type c
Loam Borrow.....M1.05.0
Sod M6.05.0
Seed M6.03.0

445.41: Surfacing Materials

The surfacing materials for paving the top portion of shoulders shall conform to the requirements of the particular sections of these specifications relating to the kind of pavement or surfacing required.

CONSTRUCTION METHODS

445.60: General

The subgrade for shoulders, if required, shall be prepared as required in Subsection 170: Grading.

Portions of the shoulders, of sufficient width to hold the pavement in its proper place, shall be built in conjunction with the pavement and shall be rolled to a width of at least 12 in. with each rolling of the roadway base course or surface course.

Whenever the plan shows that sodding, loaming, paving or other similar work affecting shoulder construction adjacent to the roadway pavement is required, the Contractor will be required to construct temporary shoulders of suitable material to support the roadway pavement adequately during rolling operations. After the pavement is constructed, the temporary shoulders shall be carefully removed and satisfactorily disposed of by the Contractor prior to construction of the permanent shoulders.

Where necessary, temporary shoulders shall be constructed in conjunction with the construction of paved shoulders in the same manner as prescribed above for roadway pavement.

When shoulders are to be loamed and seeded, the construction method shall be as specified in Subsection 765: Seeding for such work.

Sodding of shoulders shall be done in conformity with the requirements of Subsection 770: Sodding.

Ordinary borrow, gravel borrow and loam shall be furnished, placed and rolled in accordance with the requirements of Subsection 150: Embankment and as specified herein.

Paving of shoulders shall be done in the manner specified in the particular section of these specifications relating to the kind of pavement or surfacing to be used in this work.

At all times construction shall be so carried on that effective and adequate drainage will be provided.

The full widths of all shoulders except paved or sodded areas shall be reformed, trimmed, raked and rolled before the final completion of the work and the surface when finished shall conform to the proposed grade and cross section.

COMPENSATION

445.80: Method of Measurement

All borrow materials for shoulders will be measured by the cubic yard in accordance with the provision of 150.80: Method of Measurement.

Surfacing materials for paving shoulders will be measured as specified in the particular section for the kind of pavement required.

Sodding will be measured by the square yard as specified in 770.80: Method of Measurement.

445.81: Basis of Payment

Payment for grading of shoulders composed of material obtained from excavation will be included in the price paid for removal and disposal of the type of excavation used.

When composed of borrow, shoulders will be paid for at the contract unit price per cubic yard of borrow, of the kind required as specified in 150.81: Basis of Payment.

Compensation for the removal and disposal of temporary shoulder material will be included in the contract unit price under the item for the kind of material used in the roadway pavement or permanent shoulder.

When shoulders are paved with surfacing materials, such materials will be paid for at the contract unit prices for the kinds of materials used in the pavement as specified in the particular section relating to the kind of pavement or surface ordered.

When sodding is used on shoulders, it will be paid for at the contract unit price per square yard, complete in place, as specified in 770.81: Basis of Payment.

The fine-grading and rolling of the subgrade upon which shoulders are constructed will be paid for at the contract unit price per square yard under Item 170. Fine Grading and Compacting (In Subgrade Areas).

SUBSECTION 450: HOT MIX ASPHALT PAVEMENT

DESCRIPTION

450.10: General

This work shall consist of producing and placing HMA pavement. The HMA pavement shall be constructed as shown on the plans and as directed on the prepared or existing base in accordance with these specifications and in close conformity with the lines, grades, compacted thickness and typical cross section as shown on the plans. Each HMA pavement course placed shall be comprised of one of the mixture types listed in Table 450.10-1.

Table 450.10-1: HMA Pavement Courses & Mixture Types

Pavement Course	Mixture Type	Mixture Designation
Friction Course	Open-Graded Friction Course – 9.5 – Polymer Open-Graded Friction Course – 9.5 – Asphalt Rubber	OGFC-P OGFC-AR
Surface Course	SUPERPAVE Surface Course – 4.75 SUPERPAVE Surface Course – 4.75 – Polymer SUPERPAVE Surface Course – 9.5 SUPERPAVE Surface Course – 9.5 – Polymer SUPERPAVE Surface Course – 12.5 SUPERPAVE Surface Course – 12.5 – Polymer SUPERPAVE Surface Course – 19.0 SUPERPAVE Surface Course – 19.0 – Polymer Asphalt Rubber Gap Graded – 12.5	SSC – 4.75 SSC – 4.75 – P SSC – 9.5 SSC – 9.5 – P SSC – 12.5 SSC – 12.5 – P SSC – 19.0 SSC – 19.0 – P ARGG – 12.5
Intermediate Course	SUPERPAVE Intermediate Course – 12.5 SUPERPAVE Intermediate Course – 12.5 – Polymer SUPERPAVE Intermediate Course – 19.0 SUPERPAVE Intermediate Course – 19.0 – Polymer	SIC – 12.5 SIC – 12.5 – P SIC – 19.0 SIC – 19.0 – P
Base Course	SUPERPAVE Base Course – 25.0 SUPERPAVE Base Course – 37.5	SBC – 25.0 SBC – 37.5
Leveling Course	SUPERPAVE Leveling Course – 4.75 SUPERPAVE Leveling Course – 9.5 SUPERPAVE Leveling Course – 12.5	SLC – 4.75 SLC – 9.5 SLC – 12.5
Bridge Surface Course	SUPERPAVE Bridge Surface Course – 9.5 SUPERPAVE Bridge Surface Course – 9.5 – Polymer SUPERPAVE Bridge Surface Course – 12.5 SUPERPAVE Bridge Surface Course – 12.5 – Polymer	SSC-B – 9.5 SSC-B – 9.5 – P SSC-B – 12.5 SSC-B – 12.5 – P
Bridge Protective Course	SUPERPAVE Bridge Protective Course – 9.5 SUPERPAVE Bridge Protective Course – 9.5 – Polymer SUPERPAVE Bridge Protective Course – 12.5 SUPERPAVE Bridge Protective Course – 12.5 – Polymer	SPC-B – 9.5 SPC-B – 9.5 – P SPC-B – 12.5 SPC-B – 12.5 – P

450.20: Quality Assurance

A. Quality Assurance Responsibilities.

This is a Quality Assurance Specification wherein the Contractor is responsible for controlling the quality of materials and workmanship and the Department is responsible for accepting the completed work based on the measured quality. Quality Assurance is simply defined as "making sure the Quality of a product is what it should be."

The core elements of Quality Assurance include: Contractor Quality Control (QC), Department Acceptance, Department Independent Assurance (IA), Dispute Resolution, Qualified Laboratories, and Qualified Personnel. Although Quality Assurance utilizes test results to control production and determine acceptance of the HMA, inspection remains as an important element in controlling the process and accepting the product.

The Contractor is responsible for providing an appropriate Quality Control System (QC System) to ensure that all materials and workmanship meet the required quality levels for each specified Quality Characteristic. The Contractor will perform all required Quality Control inspection, sampling, and testing in accordance with these specifications and the Contractor's Quality Control Plan (QC Plan).

The Department will monitor the adequacy of the Contractor's QC activities and will perform Acceptance inspection, sampling, and testing. The Department's Acceptance information will be utilized in the acceptance determination for each Lot of material produced and placed.

IA is the responsibility of the Department's Research & Materials Section (RMS). The function of IA testing is to periodically provide an unbiased and independent evaluation of the sampling and testing procedures used in the acceptance decision. Contractor QC and Department Acceptance testing procedures and equipment will be evaluated by IA personnel using one or more of the following: observation, calibration checks, split sample comparison, or proficiency samples (homogeneous samples distributed and tested by two or more laboratories). QC and Acceptance testing personnel are evaluated by observation and split samples or proficiency samples.

B. Hot Mix Asphalt Lots & Sublots.

The quality of each HMA pavement course of the same mixture type produced and placed will be inspected, tested, and evaluated on the basis of Lots and Sublots. A Lot is defined as "an isolated quantity of material from a single source which is assumed to be produced or placed by the same controlled process."

The Lot size and corresponding unit of measure is a function of the individual Quality Characteristic evaluated. Lot sizes for Quality Characteristics subject to Department Acceptance are as shown in Table 450.10-2.

Changes in the target values, material sources, or JMF for an HMA mixture type will constitute a change in Lot, requiring the establishment of a new Lot. All Lots will be properly identified for accurate evaluation and reporting of HMA quality.

Table 450.10-2: HMA Lot Sizes

Quality Characteristic	Lot Size & Unit of Measure
PG Asphalt Binder Grading	Total Tons of HMA from all JMFs using the same PGAB Grade (from same PGAB Supplier), produced by a single plant and placed within same construction season.
PG Asphalt Binder Content	Total quantity of an HMA mixture type with the same JMF for the same individual pavement course, produced by a single plant using the same source of materials and placed at a uniform plan thickness within the same construction season, not to exceed 18,000 tons. (See Table 450.10-3).
Volumetrics – Air Voids	
In-place Density	Total quantity of an HMA mixture type with the same JMF for the same individual pavement course, produced by a single plant using the same source of materials and placed at a uniform plan thickness within the same construction season, not to exceed 18,000 tons. (See Table 450.10-3).
Thickness	
Ride Quality (IRI)	Total length (miles) of individual wheel paths (in all travel lanes and ramps) of in-place HMA with same JMF for same individual pavement course, produced by a single plant and placed within same construction season, and which is located within the same posted speed limit range as defined in Tables 450.77-1, 450.77-2, and 450.77-3.

C. HMA Quality Assurance Requirements.

These Specifications establish three categories under which HMA Lots will be produced, placed, evaluated and accepted. Table 450.10-3 below defines each of the Lot categories and outlines the required Quality Assurance activities of the Contractor and the Department. The division of the Lot categories is based on the total estimated contract quantity of each individual HMA mixture type per each project location. For contracts containing multiple HMA items, it is possible to have work performed under more than one HMA Lot category.

(1) Determination of Lot Size and Lot Category

When the total contract quantity of an HMA mixture type is <2,100 tons, it shall be classified as a Minor Lot (Category C Lot).

When the total contract quantity of an HMA mixture type is ≥2,100 tons, but <7,500 tons, it shall be classified as a Small Lot (Category B Lot).

When the total contract quantity of an HMA mixture type is ≥7,500 tons, but ≤15,000 tons, it shall be classified as a Large Lot (Category A Lot).

When the total contract quantity of an HMA mixture type is >15,000 tons, each 15,000 tons will represent a Category A Lot. If the quantity remaining after all 15,000 ton Category A Lots is ≤3,000 tons, it shall be added to the final Lot providing a final Lot quantity not to exceed 18,000 tons. If the quantity remaining after all 15,000 ton Category A Lots is >3,000 tons, it shall constitute a separate Category A Lot.

If a Category A Lot extends into the subsequent year, the Lot will be ended, and a new Lot will be established for the next year. The Lot category for the subsequent year shall be categorized based on the remaining tonnage to be placed as designated above.

Category A and B Lots shall not be divided to produce multiple smaller category Lots without the prior approval of the District Quality Engineer and RMS.

(2) Determination of Sublot Size

Each HMA Lot will be divided into Sublots. The size of each HMA Sublot shall be as listed in Table 450.65-2 and Table 450.74-1. If the quantity of HMA at the end of a Lot is equal to or greater than one half of a full Sublot, then such quantity shall be identified and evaluated as a separate Sublot. If the HMA quantity at the end of a Lot is less than one half of a full Sublot, then such quantity shall be combined with the previous full Sublot quantity and shall be identified and evaluated as the final Sublot.

Table 450.10-3: HMA Lot Categories & Quality Assurance Requirements

Quality Assurance Requirements	Category A (Large Lot)	Category B (Small Lot)	Category C (Minor Lot)
Total Quantity for individual Lot of HMA	≥7,500 tons, but ≤15,000 tons (See Note 1)	≥2,100 tons, but <7,500 tons	<2,100 tons
QC Plan Required:	YES	YES	(See Notes 2 and 3)
Contractor QC Inspection Required:	YES (450.64: Quality Control Inspection)	YES (450.64: Quality Control Inspection)	YES (450.64: Quality Control Inspection)
Contractor QC Testing Required:	YES (450.65: Quality Control Sampling and Testing Requirements)	YES (450.65: Quality Control Sampling and Testing Requirements)	YES (450.65: Quality Control Sampling and Testing Requirements)
Control Strip Required:	YES	NO	NO
Control Charts Required:	YES	NO	NO
QLA Required:	YES	YES	NO
MassDOT Acceptance Inspection Performed	Minimum 25% of Sublots (450.73: Acceptance Inspection)	Minimum 50% of Sublots, but Minimum 3 Sublots (450.73: Acceptance Inspection)	100% of Sublots (450.73: Acceptance Inspection)
MassDOT Acceptance Testing Performed:	Minimum 25% of Sublots (450.74: Acceptance Sampling & Testing)	Minimum 50% of Sublots, but Minimum 3 Sublots (450.74: Acceptance Sampling & Testing)	100% of Sublots (450.74: Acceptance Sampling & Testing)
QC Test Results included in MassDOT Acceptance Determination:	YES (If Validated)	YES (If Validated)	NO
Pay Adjustment Applied:	YES (450.92: Pay Adjustment)	YES (450.92: Pay Adjustment)	NO

Note 1: Category A Lots shall not exceed 18,000 tons as specified in 450.20: Quality Assurance, Part C(1).
Note 2: If all HMA Lots fall under Category C then a QC Plan is not required. However, if any Lots on the project fall under Category A or Category B, then any Category C Lots must be addressed in the QC Plan.
Note 3: If a QC Plan is not required, it is still the responsibility of the Contractor to provide to the Engineer any information that is designated as "Per QC Plan" as found in this specification.

MATERIALS

450.30: General

Materials shall meet the requirements in the following Subsections of Division III, Materials and as otherwise specified herein:

Performance Graded Asphalt Binder M3.01.0
Warm Mix Asphalt M3.01.4
Asphalt Anti-Stripping Additive M3.01.5

Asphalt Release Agents M3.01.6
Asphalt Emulsion for Tack Coat M3.03.0
Hot Applied Pavement Joint Adhesive M3.05.4
Hot Mix Asphalt M3.06.0
Hot Mix Asphalt Production Facility M3.12.0
Hot Mix Asphalt Materials Testing Laboratory and Equipment M3.13.0

450.32: Hot Mix Asphalt Design

HMA mixtures shall be composed of the following: Mineral aggregate, mineral filler (if required), Performance Graded Asphalt Binder (PGAB), and as permitted, recycled materials. The Contractor shall be responsible for development of an HMA Laboratory Trial Mix Formula (LTMF) for each HMA mixture type specified for the contract in accordance with the requirements of 450.30: General.

CONSTRUCTION PROCEDURES

450.40: General

Prior to the start of any work activity addressed in 450.43: Preparation of Underlying Surface through 450.52: Opening to Traffic below, a Construction Quality Meeting shall be held to review the Contractor's QC System. The Contractor shall present and discuss with the Engineer in sufficient detail the specific QC information and activities contained in each section of their QC Plan as outlined in 450.61: Contractor Quality Control Plan. The meeting is intended to ensure that the Contractor has an adequate QC System in place and that the Contractor's personnel are fully knowledgeable of the roles and activities for which they are responsible to achieve the specified level of quality. Contractor personnel required to attend the Construction Quality Meeting include the Construction Quality Control Manager (QC Manager) and all Superintendents. The Contractor shall provide a copy of the approved QC Plan for each Contractor and Department attendee of the meeting.

450.41: Control of Grade and Cross-Section

The Contractor will provide a longitudinal and transverse reference system, with a maximum spacing of 100 ft, for the purpose of locating and documenting sampling and testing locations and related uses. It is the Contractor's responsibility to clearly mark this reference system in the field. Work related to this reference system is incidental and will be included as part of the Contractor's QC System. The Department shall provide information tying in the Contractor's reference system to the State Mile Marker System.

The Contractor shall furnish, set and maintain all line and grade stakes necessary to guide the automated grade control equipment. Where required these control stakes shall be maintained by the Contractor and used throughout the operations, from the grading of the subbase material up to and including the final course of the pavement.

Under normal conditions, where more than one course of HMA is to be constructed, the use of the string line for grade control may be eliminated or discontinued after the construction of the initial course of HMA. For resurfacing projects, where only one course of HMA is to be constructed, the use of the string line for grade control may be eliminated. The use of approved automation may then be substituted for the string line where lines and grades are found to be satisfactory by the Engineer.

450.42: Weather Limitations

HMA shall only be placed on dry, unfrozen surfaces and only when the temperature requirements contained in Table 450.42-1 below are met. If the temperature requirements contained in Table 450.42-1 are not met at any point throughout the paving shift, HMA placement shall cease, except as determined and directed in writing by the Engineer depending upon the necessity and emergency of attendant conditions, and weather conditions.

The Contractor may continue HMA placement when overtaken by sudden rain, but only with material which is in transit from the HMA production facility at the time, and then only when the temperature of the HMA mixture is within the temperature limits specified and when the existing surface on the roadway is free of standing moisture. The Engineer is not obligated to accept any material that was not already in transit prior to the onset of rain and the Contractor shall suspend operations for the day when the requirements of this specification cannot be met.

The construction of HMA pavement shall terminate November 15 and shall not be resumed prior to April 1 except as determined and directed in writing by the Engineer depending upon the necessity and emergency of attendant conditions, weather conditions, and location of the project. Only in extreme cases will the placement of Surface Courses be permitted between November 15 and April 1. Regardless of any temperature requirements, OGFC mixtures shall not be placed after October 31 or before May 1 without the written permission of the Engineer.

Table 450.42-1: Temperature Limitations for HMA Placement

HMA Pavement Course	Lift Thickness (in.)	Minimum Air Temperature (°F)	Minimum Surface Temperature (°F)
Friction Course	1	50	55
Surface Course	<1 ¾	45	50
Surface Course	≥1 ¾	35 (see Note 1)	40
Intermediate Course	All	35 (see Note 1)	40
Base Course	All	35 (see Note 1)	40
Leveling Course	As Specified	45	50
Note 1: When the air temperature falls below 50°F, extra precautions shall be taken in drying the aggregates, controlling the temperatures of the materials, and in placing and compacting the mixtures.			

The Contractor shall supply the Engineer with two approved dial type thermometers with a temperature range of -50°F to 500°F and two infrared pistol thermometer for each paving machine in operation on the project. The infrared pistol thermometers shall read in Fahrenheit and conform to the following requirements:

- Portable and battery operated
- LCD Display to nearest 1°F
- Temperature operating range of 0°F to 750°F
- Accuracy of ± 2%
- Repeatability of ± 5°F
- Emissivity preset at 0.95

The thermometers will remain the property of the Contractor upon completion of the project.

450.43: Preparation of Underlying Surface

HMA mixtures shall be placed only upon properly prepared surfaces that are clean from foreign materials. The underlying surface shall be prepared in accordance with the requirements below, prior to the placement of HMA pavement courses.

A. Subbase or Reclaimed Base.

Prior to the placement of HMA Base Course mixtures, the Contractor shall inspect the prepared subbase or reclaimed base material to ensure that it is in conformance with the required grade, cross-section, and in-place density. Subbase or reclaimed base material that is not in accordance with the plans or specifications shall be reworked or replaced to meet the applicable requirements of Subsection 401: Gravel Sub-Base, Subsection 402: Dense Graded Crushed Stone for Sub-Base, or Subsection 403: Reclaimed Pavement for Base Course and/or Sub-Base before the start of HMA placement. The compacted subbase or reclaimed base shall not be frozen or have standing water when placing HMA.

B. Milling Existing HMA Pavement.

When specified on the plans, existing HMA pavement courses shall be milled and removed from the project by the Contractor in accordance with Subsection 415: Pavement Milling.

Adjustments to milling depth shall be approved by the Engineer and shall be used for consideration of the HMA pavement thickness measurements.

Each vertical face of the milled pavement that will be abutted by new pavement shall be thoroughly coated with a hot applied pavement joint adhesive meeting the requirements of 450.30: General immediately prior to placing new HMA mixture adjacent to the vertical face.

C. Patching Existing Pavement Courses.

Areas of existing HMA pavement courses that are significantly distressed or unsound shall be removed and replaced with patches using new Hot Mix Asphalt. The location and limits of patching will be as identified in the plans or as directed by the Engineer.

Each existing pavement course determined to be unsound shall be removed to the full depth of the pavement course within a rectangular area. For each patch location equal to or greater than 50 ft^2 in area (and having a minimum dimension of 4 ft) where the existing pavement courses are removed down to subbase, the subbase shall be compacted by mechanical means to not less than 95% of the maximum dry density of the subbase material as determined by AASHTO T 99 Method C at optimum moisture content. Each edge of the patch area shall be sawcut or otherwise neatly cut by mechanical means to provide a clean and sound vertical face. The vertical face of each edge shall be thoroughly coated with a hot applied pavement joint adhesive meeting the requirements of 450.30: General immediately prior to placing the HMA patching mixture.

Delaminated areas of existing pavement courses resulting from pavement milling shall be cut back neatly by mechanical means to the limits of any unsound material. After removing all unsound material, the underlying pavement surface within the patch limits shall receive a thorough tack coat

at a rate of application in accordance with 450.43: Preparation of Underlying Surface, Part G(2) prior to placing the HMA patching mixture.

HMA patching mixture shall be the same mixture type as the existing pavement course being patched or as specified on the plans or as directed by the Engineer. The lift thickness of the patching mixture shall not exceed four times the nominal maximum aggregate size of the mixture. The patching mixture will be placed by hand or by mechanical means and shall match the thickness, grade, and cross-slope of the surrounding pavement. The HMA patching mixture shall be compacted using a steel wheel roller. For patch areas not large enough to permit use of a roller, compaction shall be accomplished using a mechanical tamper capable of achieving the required in-place density. The Contractor shall test the in-place density of each patched area using a calibrated density gauge and record the test data for each patched area on NETTCP Test Report Forms (TRFs). The in-place density of the HMA patching mixture shall be not less than 90% of the maximum theoretical density of the mixture as determined by AASHTO T 209 (Method A).

D. Leveling Courses.

HMA Leveling Courses shall only be used when specified in the Contract. The HMA mixture used for a Leveling Course shall be as specified in the Contract and shall conform to the relevant materials requirements of this specification.

E. Preparation of Curbs, Edging, and Utilities.

All curbs or edging shall be installed or reset to the line and grade established on the plans. The surface elevation of all catch basin frames and grates, manholes, utility valve boxes, or other utility structures located in the pavement shall uniformly match the grade and cross-slope of the final pavement riding surface. Adjustment of all curbs, edging, and utilities shall be completed prior to the placement of the HMA Surface Course. When OGFC is specified to be placed over the Surface Course, all curbs, edging, and utilities shall be adjusted prior to placement of the HMA Surface Course mixture. Hand placement of HMA along curbs and edging or around utilities after placement and compaction of the Surface Course shall not be permitted.

F. Sweeping Underlying Surface.

The Contractor shall provide a mechanical sweeper equipped with a water tank, spray assembly to control dust, a pick-up broom, a dual gutter broom, and a dirt hopper. The sweeper shall be capable of removing millings and loose debris from the underlying surface.

Prior to opening a milled area to traffic, all milled pavement surfaces shall be thoroughly swept in accordance with the applicable milling specification required by the contract to remove all remaining millings and dust. All pavement surfaces shall be swept clean, free of dust, fines, and slurry immediately prior to application of the tack coat. Any new HMA pavement course that has been open to traffic, or that was placed 30 days prior to placement of the subsequent pavement course, shall also be swept immediately prior to application of the tack coat.

G. Asphalt Emulsion for Tack Coat.

A tack coat of asphalt emulsion, meeting the requirements of 450.30: General shall be uniformly applied to existing or new pavement surfaces prior to placing pavement courses as specified below.

The existing surface shall be swept clean of all foreign matter and loose material using a mechanical sweeper and shall be dry before the tack coat is applied.

In addition to the requirements above, all vertical surfaces of curbs, edging, utilities, and drainage structures that will be abutted by new pavement shall receive a thorough tack coat application immediately prior to placing each HMA pavement course.

(1) Tack Distributor System.

A pressure distributor shall be used to apply the tack coat. The tack distributor system shall be equipped with the following to control and monitor the application:

- System for heating the asphalt emulsion uniformly to specified temperature.
- Thermometer for measuring the asphalt emulsion temperature.
- Adjustable full circulation spray bar.
- Positive controls including tachometer, pressure gauge, and volume measuring device.

At least once every 12 months the application rate of the tack distributor system shall be calibrated by the Contractor using the appropriate spray bar nozzle size(s). The calibration shall be in the transverse and longitudinal directions following ASTM D2995. The calibration shall address the spray bar height, nozzle angle, spray bar pressure, thermometers, and strapping stick. Documentation of the annual calibration shall be kept with the tack distributor system and shall be provided to the Engineer when requested.

The use of tack wagons/trailers shall only be allowed for patching under Item 451 or when the Engineer agrees that the area is inaccessible to the distributor. Regardless of application method the tack application rates shall meet the requirements below. The use of gravity distributors is not allowed.

(2) Tack Application Requirements.

The tack coat material shall be applied by a pressure distributor. All nozzles on the distributor shall be open and functioning. All nozzles shall be turned at the same angle to the spray bar. The nozzles shall be offset at an angle from the spray bar to prevent the fan from one nozzle from interfering with the fan from another. Proper nozzle angle shall be as determined by the Manufacturer of the distributor spray bar. The spray bar shall be adjusted so that it is at the proper height above the pavement surface to provide a triple overlap spray for a uniform coverage of the pavement surface. A triple lap application requires that the nozzle spray patterns overlap one another such that every portion of the pavement receives spray from exactly three nozzles.

Tack coat application rates for specific surface conditions shall be in accordance with the following:

a) On a new HMA surface, not opened to traffic, the emulsion application rate shall equal 0.06 to 0.08 gallons per square yard
b) On an existing tight smooth pavement the emulsion application rate shall equal 0.06 to 0.08 gallons per square yard
c) On a milled surface the emulsion application rate shall equal 0.07 to 0.09 gallons per square yard
d) On cement concrete base course the emulsion application rate shall be equal to spray application for adjacent surface
e) On new HMA patches the emulsion application rate shall equal 0.06 to 0.09 gallons per square yard

Specified application rates are based on a 57/43 residual to water ratio. The residual amount of tack is defined as the remaining asphalt after the tack coat has set and all water has evaporated. The application rate of the tack coat emulsion shall be set at a rate that achieves the specified residual amount. Tack coat shall be applied to cover a minimum of 95% of the pavement surface.

(3) Tack Inspection.

The asphalt emulsion temperature and application rate shall be periodically measured and properly recorded by the Contractor on NETTCP Inspection Report Forms (IRFs). If the temperature or application rate is determined to not be in conformance with the specification requirements above, the Contractor shall make appropriate adjustments to the tack application operations.

450.44: Zero Tolerance for Use of Petroleum Products as Release Agents

There is zero tolerance for the use of petroleum products (e.g. diesel, kerosene, etc.) as a release or cleaning agent in the manufacture, loading, transporting, and placement of HMA materials. The Contractor's QC Manager shall ensure conformance with this requirement. Equipment to be used for transferring, hauling, or placing HMA materials shall be inspected by QC personnel per the approved QC Plan and will ensure that no petroleum products are used. Contaminated equipment shall not be used most especially haul units. Haul units and truck companies with repeated violations will not be used to haul HMA materials for MassDOT projects. Any violations of this policy shall be reported to the Engineer and subject to the following actions:

A. Haul Unit Violations During Loading at the Plant and Transportation to the Project.

Haul units identified by the Contractor to have contaminated beds during initial inspection prior to loading will not be used during that day's placement operations. If a haul unit is found to violate this policy after the initial inspection, the Engineer shall issue a Deficiency Report (DR) and the haul unit and driver shall be suspended from the project until a written corrective action is proposed and approved by the Engineer.

If a haul unit is found to be contaminated with an unapproved release agent after it has been loaded, the HMA shall be rejected by the Engineer. The Engineer shall issue a DR and the haul unit and driver shall be suspended from the project until a written corrective action is proposed and approved by the Engineer.

B. Field Equipment Violations.

All equipment used for the placement and compaction of HMA shall not be treated with an unapproved release agent. This includes the paver, MTV, rollers, plate compactors, and tools.

Any use of an unapproved release agent will result in the termination of placement operations and the removal of contaminated materials. The Engineer shall issue a DR and paving operations will not be allowed to resume until a written corrective action is submitted and approved by the Engineer.

C. Repeated Violations

If a Contractor or any of their Subcontractors is found to repeatedly violate this policy it may result in further actions taken by the Engineer including filing a report with the Department of Environmental Protection.

450.45: Hot Mix Asphalt Production

HMA production shall conform to the requirements of 450.30: General.

450.46: Hot Mix Asphalt Transportation and Delivery

A. Haul Unit Equipment

The trucks used to transport HMA to the field placement site shall have tight, clean, smooth metal beds. When necessary to maintain the required HMA temperature, trucks shall be equipped with insulated beds. The truck beds shall be evenly and lightly coated with an approved release agent found on the QCML to prevent HMA mixture adherence. Truck beds shall be kept free of kerosene, gasoline, fuel oil, solvents, or other materials that could adversely affect the HMA mixture in accordance with 450.44: Zero Tolerance for Use of Petroleum Products as Release Agents. Excess lubricant shall not be allowed to accumulate in low spots in the body. The Contractor shall employ sufficient procedures and QC inspection to ensure that all truck beds are free of contaminants, residual HMA, or excess release agent.

B. HMA Protection During Transport.

The HMA shall be transported from the plant to the field placement site in trucks previously cleaned of all foreign materials. During transportation of the HMA from the plant to the placement equipment at the site, each load shall be fully covered at all times, without exception, with canvas or other suitable material of sufficient size and thickness, which is tightly secured to furnish complete protection. Mesh tarps will not be allowed. The HMA shall not be transported such a distance that temperature segregation of the mixture takes place or that excessive crusting is formed on the surface, bottom or sides of the HMA.

C. Coordination and Inspection of HMA Delivery.

The dispatching of trucks from the plant shall be continuously coordinated to ensure that all of the HMA mixture planned to be delivered to the field placement site may be placed and compacted before the end of the scheduled workday. During paving operations, the Contractor shall provide for ongoing two-way radio or cellular phone communication between the field placement site and the HMA plant.

The target temperature and allowable range of the HMA when delivered at the field placement site will be established in the Contractor's QC Plan. The Contractor shall measure the temperature of the HMA, either from the trucks prior to discharge or from the paver hopper, using an infrared pistol type thermometer at the minimum frequency indicated in the approved QC Plan. All QC temperature measurement results of the delivered HMA mixture shall be recorded on NETTCP IRFs. The Contractor shall also visually inspect the delivered HMA for crusting or material (physical) segregation. The Contractor shall reject any loads of HMA with material which is crusted, segregated, or which is not within the delivery temperature range established in the Contractor's QC Plan.

450.47: Hot Mix Asphalt Placement

A. Material Transfer Vehicles.

For projects on all controlled access highways with HMA Category A Lots, a Material Transfer Vehicle (MTV) will be required. An MTV shall also be required for all pavement courses requiring Ride Quality testing (IRI). The MTV shall be used to place each pavement course, with the exception of base and leveling courses, on the mainline of the traveled way including all travel lanes, auxiliary lanes, and collector/distributor (C/D) lanes.

(1) MTV Equipment Requirements.

The MTV shall be self-propelled and capable of remixing and transferring the HMA mixture to the paver so that the HMA mat behind the paver has a uniform homogeneous temperature and appearance. The MTV shall be equipped with the following:

(a) A truck unloading system, capable of maintaining the planned paving production rate, which shall receive HMA from the trucks and independently deliver the mixture from the trucks to the paver.
(b) A paver hopper insert with a minimum capacity of 14 tons shall be installed in the hopper of conventional paving equipment. The paver hopper insert shall be marked to identify the point at which the insert is 50% full.
(c) An internal storage bin with a minimum capacity of 25 tons of mixture and a remixing system in the bottom of the storage bin to continuously blend the mixture as it discharges to a conveyor system; or a dual pugmill system located in the paver hopper insert with two full length longitudinally mounted counter-rotating screw augers to continuously blend and feed the mixture through the paver to the screed.

(2) MTV Operations.

The Contractor shall ensure that the MTV is loaded continuously to keep the paver moving. The volume of HMA in the paver hopper insert shall remain above the 25% capacity mark during all paving operations. In the event the MTV malfunctions during HMA placement operations, the Contractor shall continue placement of material until such time there is sufficient HMA placed to maintain traffic in a safe manner. The Contractor may continue placement of HMA until any additional mixture in transit has been placed. Paving Operations may resume only after the MTV has been repaired and is fully operational.

The MTV shall operate in the adjacent lane and not travel on the tack coat when the Engineer and Construction QC Manager determine that the project conditions and safety allow. In these instances, only the paver will be allowed on the tack coat.

(3) Bridge Loading Restrictions.

The MTV shall be subject to all bridge load restrictions. The Contractor shall verify the sufficiency of the current bridge ratings with the Engineer. In the event that the MTV exceeds the maximum allowable bridge load, the MTV shall be empty when crossing the bridge and shall be moved across without any other Contractor vehicles or equipment being on the bridge. The MTV shall be moved across the bridge in a travel lane and shall not be moved across the bridge on the shoulder. The MTV shall be moved at a speed no greater than 5 mph without any acceleration or deceleration.

B. Pavers.

Each HMA pavement course shall be placed with one or more pavers at the specified grade, cross-slope, and lift thicknesses.

(1) Paver Equipment Requirements.

Each paver shall be a self-contained, power propelled unit and shall produce a finished surface of smooth and uniform texture without segregating, tearing, shoving or gouging the HMA. The pavers shall be equipped with the following:

- A receiving hopper having sufficient capacity to ensure a uniform and continuous placement operation.
- Automatic feed controls, which are properly adjusted to maintain a uniform depth of material ahead of the screed.
- Automatic screed controls with sensors capable of sensing the transverse slope of the screed, and providing the automatic signals that operate the screed to maintain grade and transverse slope.
- An adjustable vibratory screed with full-width screw augers and heated for the full width of the screed.
- Capable of spreading and finishing HMA pavement courses in widths at least 12 in. more than the width of one travel lane.
- Capable of being operated at forward speeds to satisfactorily place the HMA.

(2) Paver Operations.

The Contractor shall ensure that the paver is loaded continuously to keep the placement operation moving. The volume of HMA in the paver receiving hopper shall remain above the paver tunnel during all paving operations. Proper practices shall be utilized to ensure that HMA is not dumped or spilled onto the prepared underlying surface in front of the paver by trucks unloading into the receiving hopper. Any material that falls in front of the paver shall be removed before the paver passes over it. The screed vibrator shall be operated at all times.

When the use of an MTV is required the paving operations shall be coordinated in such a manner as to allow the paver to operate at a consistent speed without stopping. If the Construction QC Manager or the Engineer determines that the paver excessively changes speed or stops, then

stoppage of the paving operation may be required until such time the Contractor is able to correct the deficiency.

C. Mobile Lighting for Milling and Paving Equipment.

Whenever paving operations are being conducted between the hours of sunset and sunrise, the Contractor shall provide mobile lighting system(s) attached to each piece of mobile paving equipment, including mechanical sweepers, material transfer devices, paver machines, and rollers, but shall not include trucks used to transport materials and/or personnel to the work zone or other vehicles that are continually moving in and out of the work zone.

Mobile lighting systems attached to paving equipment shall be in addition to work zone lighting requirements specified in Subsection 850: Traffic Controls for Construction and Maintenance Operations.

Lighting attached to each machine shall be capable of providing a minimum of 1 fc measured 60 ft in front of and behind the equipment. Lighting measurements shall be per Subsection 850: Traffic Controls for Construction and Maintenance Operations. Light fixtures shall be balloon-style or otherwise diffused to minimize glare. Flood lights without diffusers shall not be permitted.

No part of the mobile lighting system shall exceed a height 13 ft above the pavement except in areas with constrained vertical clearances where the height may further be limited by the Engineer.

Existing street or highway lighting shall not eliminate the requirement for the Contractor to provide lighting.

D. HMA Placement Inspection.

The HMA shall be free of identifiable material (physical) segregation or temperature related segregation. The HMA placed shall be a homogeneous mixture that is of uniform temperature. The Contractor shall inspect the mixture in the paver receiving hopper for material (physical) segregation. The Contractor will also inspect the uncompacted HMA mat behind the paver for longitudinal streaks, end-of-load segregation or other irregularities.

The Contractor shall also measure the temperature differential in the uncompacted mat behind the paver. Each HMA pavement course behind the paver shall be divided into longitudinal Sublots of 500 ft. The mat temperature differential of the uncompacted HMA shall be measured at a minimum of one location in each Sublot along a straight transverse line behind the paver at a minimum frequency of once per Sublot. The transverse line for mat temperature measurement shall be established at a distance within 10 ft behind the paver screed. Temperature measurements shall be obtained by the Contractor using an infrared pistol thermometer at 2-ft intervals along the transverse line across the width of the mat and recorded on NETTCP IRFs. The difference between the highest and lowest temperature measurement shall not exceed 20°F.

If the maximum mat temperature differential is exceeded, or if material segregation or irregularities in the HMA mat behind the paver are noted, the Contractor shall review the production, transportation, and placement operations and take corrective action. The Contractor shall make every effort to prevent or correct any irregularities in the HMA, such as changing pavers or using different and additional equipment. The Contractor's QC Plan shall fully outline procedures

for inspecting the HMA mat during placement, identifying and troubleshooting material segregation or temperature related segregation, and implementing corrective action.

450.48: Hot Mix Asphalt Compaction

A. Compaction Equipment Requirements.

The Contractor shall employ compaction equipment as outlined in the approved QC Plan. Equipment used for compaction of HMA Base Courses, Intermediate Courses and Surface Courses may include steel wheeled rollers, vibratory rollers, oscillation rollers, or pneumatic-tired (rubber tired) rollers as determined appropriate by the Contractor for the particular mixture type being placed. The number and type of rollers used for breakdown, intermediate, and finish rolling shall be sufficient to achieve the target in-place density and specified course thickness.

B. Compaction Operations.

The rollers shall not crush the aggregate in the HMA mixture and shall be capable of reversing without shoving or tearing the mixture. Rollers shall not be permitted to stop on the mat except to reverse direction. Rollers may also stop on the mat to refill water when the Construction QC Manager and Engineer determine that the project conditions and safety do not allow for removing the roller from the pavement mat. In these instances, the Contractor shall ensure that the pavement is sufficiently cool to prevent the roller from leaving mat deficiencies. The Contractor shall outline in the QC Plan the proposed rolling sequence for each HMA pavement course to be placed. For HMA Category A Lots, the initial rolling pattern for each pavement course will be confirmed or adjusted during placement of the Control Strip in accordance with the requirements of 450.51: HMA Mix Design Verification and Control Strip Requirements, Part B. As the Lot placement progresses during the construction season, the rolling pattern shall be adjusted as necessary to achieve the specified HMA in-place density. The rolling pattern shall be noted in the Quality Control Daily Diary. If there is a major change to the rolling pattern, such as the addition or subtraction of a roller and the subsequent individual pavement mat quality characteristic test results fall below the Specification Limits, then a new Control Strip shall be performed.

C. Compaction of OGFC.

Rubber tire rollers will not be permitted on Open-Graded Friction Course (OGFC) mixtures. Vibratory and oscillatory rollers shall be operated in static mode. Initial rolling of OGFC should be accomplished with the breakdown roller within a short distance of the paver. Any subsequent rolling shall be accomplished without over-rolling the mixture. Breakdown and intermediate rolling of OGFC shall be completed before the material has cooled to 195°F.

D. Inspection & Testing of Compacted HMA

The compacted HMA pavement course shall be free of mat deficiencies listed below and shall meet the requirements for in-place density, thickness, and ride quality specified in 450.65: Quality Control Sampling and Testing Requirements, Part F. The Contractor shall inspect each Sublot of HMA throughout the compaction operation and shall further inspect the in-place HMA after Sublot completion and identify any areas of visible material (physical) segregation. The Contractor shall reject any in-place Sublot of HMA which is determined to be segregated through procedures established in the QC Plan. The Contractor will also test each Sublot for in-place density, thickness,

and ride quality as specified in 450.65: Quality Control Sampling and Testing Requirements, Part F. Mat deficiencies include, but are not limited to:

- Material (physical) segregation
- Wavy surface
- Tearing of the mat
- Non-uniform mat texture
- Screed marks
- Poor pre-compaction
- Poor mix compaction
- Poor Joints
- Transverse (check) cracking
- Mat shoving under roller
- Bleeding or fat spots in the mat
- Roller marks

450.49: Hot Mix Asphalt Joints

The Contractor shall plan the sequence of HMA placement to minimize transverse and longitudinal joints in each pavement course. Paving operations should employ long pulls or tandem pavers, whenever practicable, to reduce the number and length of joints. Finished joint surfaces, including joints in the roadway and bridge joints, shall be uniform and true to the required grade and cross-slope without deviations exceeding ¼ in., both transversely and parallel to the joint, when measured with a 10-ft standard straightedge.

A. Transverse Joints.

Where the start or end of a new HMA pavement course meets existing HMA pavement, the existing pavement shall be sawcut to form a transverse butt joint for the full depth of all new pavement courses. The sawcut shall follow a straight line and provide a clean and sound vertical face. Material at any intermediate transverse joint resulting from suspension of placement of a new HMA pavement course shall also be sawcut and removed to provide a clean vertical face before continuing placement of the pavement course.

When traffic is to be carried over any transverse joint before completion of an HMA pavement course, the Contractor shall provide a temporary tapered joint with a maximum 12:1 slope. The HMA mixture forming the taper shall be placed on heavy wrapping paper or other suitable material to serve as a bond breaker. The temporary tapered joint shall be sawcut to reveal the full depth of the pavement course and form a transverse butt joint with a clean vertical face. The temporary tapered joint material shall be completely removed before resuming placement of the HMA pavement course.

Prior to the start of HMA placement at each transverse joint, the vertical joint face shall be thoroughly coated with a hot applied pavement joint adhesive meeting the requirements of 450.30: General. The asphalt sealer temperature and application rate for each pavement course shall be established in the Contractor's QC Plan and shall follow the Manufacturer's recommendation. No reheating of the joint face shall be permitted. Equipment used to apply the hot applied pavement joint adhesive shall be capable of maintaining the sealer at the established temperature and

application rate sufficient to uniformly coat the vertical joint face without runoff or accumulation of the asphalt sealer.

B. Longitudinal Joints.

All longitudinal joints in HMA Surface Courses shall be located on the roadway centerline or on a lane line or edge line of the traveled way. The longitudinal joints in each pavement course below the Surface Course shall be successively offset from the joint in the Surface Course by no more than 12 in. and no less than 6 in. Joints shall be straight and parallel to the lane line of the roadway.

(1) Vertical Joints.

When an HMA pavement course is placed using single paver pulls, the Contractor shall employ suitable equipment to confine the longitudinal edge of the HMA mixture to establish an edge that is near vertical. For all HMA Surface Course mixtures placed, when the Contractor's placement operations do not provide a confined and near vertical edge, the longitudinal edge of the Surface Course shall be sawcut full depth and removed to provide a clean vertical face before placement of the adjacent course of HMA.

All longitudinal joint edges of HMA Surface Courses, regardless of whether the joint edge is required to be sawcut, shall be treated prior to placing the adjacent pull of HMA. The vertical joint shall be coated with a hot applied pavement joint adhesive meeting the requirements of 450.30: General. The asphalt sealer shall be applied at a sufficient temperature and application rate for each pavement course sufficient to uniformly coat the vertical joint face without runoff or accumulation of the sealer. The asphalt sealer temperature and application rate shall be established in the Contractor's QC Plan and shall follow the Manufacturer's recommendation. No reheating of the joint shall be permitted.

When placing an HMA Surface Course with pavers in tandem, the use of the hot applied pavement joint adhesive will be omitted, provided the temperature of the mixture at the longitudinal joint does not fall below 200°F prior to the placement of the adjacent mat.

When the longitudinal edge of any HMA pavement course is placed against an adjoining edge such as existing pavement, curb, gutter, drainage or utility structure, or any metal surface, a tack coat shall be uniformly applied to the entire vertical joint surface in accordance with 450.43: Preparation of Underlying Surface prior to placement of the HMA.

(2) Wedge Joints.

The Contractor may use a longitudinal wedge joint when placing HMA pavement courses at a thickness of 1.25 in. to 3.75 in. as shown in Figure 450.49-1 below. In instances where the joint will not be subjected to traffic prior to the adjacent pass being placed the maximum thickness may be increased to 5 in.

When a wedge joint is proposed for use, the joint detail shall be included in the Contractor's QC Plan. The wedge joint shall include a notched vertical edge with a minimum depth equal to the nominal maximum aggregate size (NMAS) at the top and bottom of the wedge. The sloped surface of the wedge joint shall not exceed a 6:1 slope. The width of the wedge shall not exceed 6 times the pavement depth. The Contractor shall use a commercially manufactured wedge joint attachment to the paver, or other attachment approved by the Engineer, to form the wedge joint.

Hot applied pavement joint adhesive shall not be applied to wedge joints. A tack coat shall be applied to the entire surface of the wedge joint in accordance with 450.43: Preparation of Underlying Surface prior to placement of the adjacent pull of HMA.

Figure 450.49-1: Notched Wedge Joint

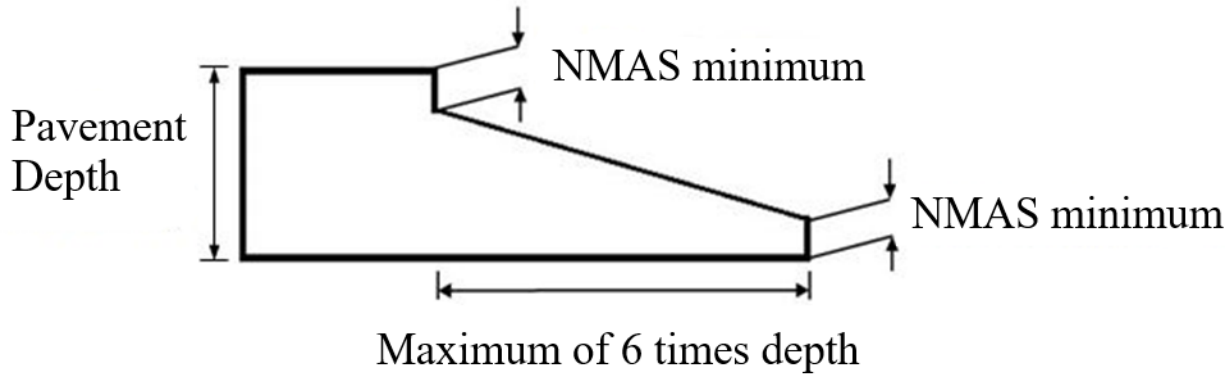

C. Inspection & Testing of HMA Joints.

The hot applied pavement joint adhesive temperature and application rate shall be measured and properly recorded by the Contractor on NETTCP IRFs a minimum of once per transverse joint and once per 1,000 ft of longitudinal joint. If the temperature or application rate is determined to not be in conformance with the requirements established in the Contractor's QC Plan, the Contractor shall make appropriate adjustments to the asphalt sealer application operations.

The placement and compaction of HMA at each transverse joint or longitudinal joint shall provide a tight bond between the existing pavement and the new pavement course. The Contractor shall visually inspect each transverse joint and longitudinal joint throughout the placement and compaction operations and shall further inspect the joints after Sublot completion and identify any bumps, depressions, openings, or other visible defects. The Contractor shall reject any in-place Sublot of HMA which is determined to have defective joints through procedures established in the QC Plan.

Finished joint surfaces, including joints in the roadway and bridge joints, shall be uniform and true to the required grade and cross-slope without deviations exceeding ¼ in., both transversely and parallel to the joint, when measured with a 10-ft standard straightedge. The in-place density of the completed HMA pavement course, within 1 ft of either side of the finished joint, shall be not less than 90% of the maximum theoretical density of the mixture as determined by AASHTO T 209 (Method A). The Contractor will measure the surface smoothness and test the in-place density of each transverse joint and longitudinal joint of each Sublot of HMA as specified in 450.65: Quality Control Sampling and Testing Requirements, Part F. All joint inspection and testing data shall be recorded on NETTCP IRFs and TRFs.

450.50: HMA Pavement on Bridges

A. Bridge Course Mixture Requirements.

HMA pavement courses for bridge decks shall consist of a Bridge Protective Course, placed first, followed by a Bridge Surface Course. The maximum amount of Recycled Asphalt Pavement (RAP)

used in HMA pavement courses for bridge decks shall not exceed 15%. All Bridge Protective Course mixtures shall be treated with an approved anti-stripping compound as specified under 450.30: General. The addition of anti-strip incorporated in the HMA mixture shall be in accordance with the anti-strip Manufacturer's recommendation.

The Bridge Protective Course and Bridge Surface Course shall be placed only after all curbing and edging, when included in the work, are in place. The Bridge Protective Course shall be placed within 24 hours after the membrane waterproofing has been placed. No vehicular traffic shall be permitted over any bare membrane waterproofing. Equipment used for placement and compaction of the Bridge Protective Course and Bridge Surface Course shall be sufficient to place the HMA mixture at the required grade, cross-slope, thickness, and in-place density without damaging the underlying membrane waterproofing. Rollers will not be allowed to use the vibratory function when compacting the mat. Rollers operated in oscillatory mode may be permitted.

B. Inspection & Testing of Bridge Course Mixtures.

The Contractor shall inspect and test each Sublot of Bridge Protective Course HMA mixture and Bridge Surface Course HMA mixture in accordance with the requirements for mixture temperature, mat temperature, segregation, and joint quality as specified in 450.43: Preparation of Underlying Surface through 450.52: Opening to Traffic. QC sampling and testing of each Sublot shall be performed for all HMA loose mix Quality Characteristics specified in 450.65: Quality Control Sampling and Testing Requirements, Part F. The in-place density of the Bridge Protective Course and Bridge Surface Course shall be randomly tested using a calibrated density gauge and the test data recorded on NETTCP TRFs. The in-place density of the Bridge Protective Course and Bridge Surface Course shall be not less than 90% of the maximum theoretical density of the mixture as determined by AASHTO T 209 Method A and tested per AASHTOT 343 or T 355. Cores shall only be allowed for Dispute Resolution. When the HMA Bridge Surface Course is placed in conjunction with mainline pavement, QC testing for ride quality shall be performed as specified in 450.65: Quality Control Sampling and Testing Requirements, Part F(11).

450.51: HMA Mix Design Verification and Control Strip Requirements

For all pavement courses with HMA Lots falling under Lot Category A (Large Lots), the HMA mix design Verification and Control Strip procedures outlined below shall apply.

A. Laboratory Verification of HMA Mix Design.

The Contractor shall develop and submit a Laboratory Trial Mix Formula (LTMF) for each HMA mixture type, which is to be proposed as a Job Mix Formula (JMF), a minimum of 60 days prior to the start of HMA production in accordance with the requirements of 450.30: General and MassDOT's Asphalt Mix Design approval process. The Contractor shall not proceed to HMA production for the Control Strip as outlined below until the LTMF is verified by the Department.

B. HMA Control Strip.

For all HMA pavement courses with Lots falling under Category A (Large Lots), with the exception of Leveling Courses, the Contractor shall produce and place a Control Strip Lot on the first day of HMA production.

The Control Strip will be used to verify that the HMA can be produced per the LTMF, to establish compaction patterns, and to verify that the equipment and processes for lay-down and compaction are capable of providing the HMA pavement course in conformance with these specifications. The Control Strip Lot shall be placed in the same manner planned for the full production Lot. This shall include paving with the same equipment and personnel, at the same speed, and using the same number of rollers as will be used during full production. If the paving operation is significantly changed after the Control Strip then the Engineer may require that another Control Strip be performed.

The Control Strip Lot shall consist of a minimum of 600 tons of HMA, but not more than 1,800 tons. Each Control Strip will be divided into 3 equal Sublots. The Contractor and the Department will both perform inspection, sampling, and testing on the Control Strip and evaluate the corresponding data as outlined below.

The Engineer may waive the requirement for a Control Strip in its entirety or for evaluation of the plant production Quality Characteristics, if all of the following requirements are met:

- The Contractor has placed a passing (i.e. Verified) Control Strip in the same calendar year.
- The Verified Control Strip was for an HMA pavement course with the same LTMF produced by the same HMA plant.
- The Verified Control Strip was for a pavement course with the same lift thickness (±15%).
- The Contractor's most recent Category A Lot represented by the Verified Control Strip has a Quality Level of 90 PWL or better (for each Quality Characteristic) in the same calendar year.

(1) Control Strip Inspection.

The Contractor's QC personnel shall perform inspection of each Control Strip Sublot at both the HMA production facility and at the site of HMA field placement. The specific items to be inspected for the Control Strip shall include the four primary inspection components (Equipment, Materials, Environmental Conditions, Workmanship) in accordance with the requirements of Table 450.64-3, Table 450.64-4, and as specified in the Contractor's approved QC Plan. The Department will also inspect each Control Strip Sublot for the inspection components of Materials and Workmanship.

(2) Control Strip Sampling and Testing.

The Contractor and the Department shall independently sample and test the Control Strip Lot for the Quality Characteristics identified in Table 450.51-1. The Contractor and the Department shall independently sample and test each Sublot produced and placed. Each Contractor QC sample and each Agency Acceptance sample shall be randomly obtained from each Sublot in accordance with 450.65: Quality Control Sampling and Testing Requirements, Part A and the prescribed sampling protocols for each Quality Characteristic as outlined in 450.65: Quality Control Sampling and Testing Requirements, Part F. Split samples shall be retained for each Sublot by both the Contractor and the Department in accordance with 450.65: Quality Control Sampling and Testing Requirements, Part D.

(3) Evaluation of Control Strip Inspection Data.

The Contractor and the Department shall each evaluate their respective Control Strip inspection data against the requirements for Materials and Workmanship specified in 450.43: Preparation of Underlying Surface through 450.52: Opening to Traffic.

(4) Evaluation of Control Strip Sampling and Testing Data.

The Contractor and the Department shall each evaluate their respective individual Sublot test results against the Control Strip Quality Limits in Table 450.51-1. The Contractor and the Department shall also evaluate the Control Strip Lot Quality Level (represented by PWL) using the Specification Limits in Table 450.51-1 for those Quality Characteristics subject to Quality Level Analysis (QLA). The Contractor's QC test data shall be subject to Validation against the Agency's Acceptance test data in accordance with 450.77: Lot Acceptance Determination Based on Testing Data and, if Validated, shall be combined with the Acceptance test data to determine the Lot Quality. The Control Strip Lot Quality Level must be 70 PWL or greater and shall be evaluated in accordance with 450.77: Lot Acceptance Determination Based on Testing Data Part A.

Table 450.51-1: Control Strip Quality Limits

Quality Characteristic	Target	Specification Limits LSL	Specification Limits USL	Engineering Limits LEL	Engineering Limits UEL	Acceptance Limit
PG Asphalt Binder Grading	Per Binder Grade specified	N/A	N/A	Per M3.01.0: Performance Graded Asphalt Binder		N/A
PG Asphalt Binder Content	Per LTMF	Target – 0.3%	Target + 0.3%	Target – 0.4%	Target + 0.4%	≥70 PWL
Volumetrics: Air Voids	4%	2.7%	5.3%	2%	6%	≥70 PWL
Combined Gradation: Passing #4 and Larger Sieves	Per LTMF	N/A	N/A	Target – 7%	Target + 7%	N/A
Combined Gradation: Passing #8 Sieve	Per LTMF	N/A	N/A	Target – 5%	Target + 5%	N/A
Combined Gradation: Passing #16 to #50 Sieve	Per LTMF	N/A	N/A	Target – 4%	Target + 4%	N/A
Combined Gradation: Passing #100 Sieve	Per LTMF	N/A	N/A	Target – 3%	Target + 3%	N/A
Combined Gradation: Passing #200 Sieve	Per LTMF	N/A	N/A	Target – 1.5%	Target + 1.5%	N/A
In-Place HMA Mat Density (Cores)	95% of G_{mm}	92.5% of G_{mm}	97.5% of G_{mm}	91.5% of G_{mm}	98.5% of G_{mm}	≥70 PWL
Thickness: (All Courses 1 in. or greater) (See Note 1)	Per Plans	-20% of Target Thickness	+20% of Target Thickness	-30% of Target Thickness	+30% of Target Thickness	≥70 PWL
Ride Quality: Posted Speed Limit ≥55 mph (See Note 1)	50 in./mi	N/A	70 in./mi	N/A	80 in./mi	≥70 PWL
Ride Quality: Posted Speed Limit ≥40 mph, but <55 mph (See Note 1)	70 in./mi	N/A	100 in./mi	N/A	110 in./mi	>70 PWL

Note 1: To be evaluated for applicable pavement courses subject to testing per 450.65: Quality Control Sampling and Testing Requirements, Part F. The Quality Limits for Ride in this table shall only apply to Control Strips for the final pavement course (HMA Surface Course or Friction Course). For pavement courses below the final pavement course that are subject to Ride Quality testing, the Mean IRI for the Control Strip Sublots shall be less than or equal to the Maximum Mean IRI values in Table 450.65-4.

(5) Verification of Control Strip Lot and LTMF.

In order for a Control Strip Lot and corresponding LTMF to be Verified, the following criteria must be met:

a) All Attributes inspected for each Sublot must meet the specification requirements in Table 450.73-3.
b) All individual Sublot test results for the Quality Characteristics tested on the Control Strip must be within the Engineering Limits in Table 450.51-1.
c) If the evaluation of all inspection data and testing data for the Control Strip indicates that the individual Sublots are in conformance with the requirements outlined in 450.41: Control of Grade and Cross-Section, Part B, Parts (3) and (4) above and the Lot Quality for each applicable Quality Characteristic in Table 450.51-1 is ≥70 PWL, the Control Strip Lot and LTMF shall be declared "Verified." In such event, the LTMF shall become the JMF for the Lot and the Contractor may proceed with production and placement of the first HMA Lot.
d) If the Control Strip is not Verified, the Contractor shall reassess the LTMF, the production process, and the placement process to determine the apparent cause(s) of non-conformance. The Contractor must submit proposed adjustment(s) to the LTMF and/or the production process and/or placement process. If adjustments to the LTMF are "major" (as defined in Table 1 of AASHTO R 42), the Contractor will be required to submit a new LTMF for laboratory verification by the Engineer per the requirements of 450.51: HMA Mix Design Verification and Control Strip Requirements, Part A. If proposed adjustment(s) are accepted by the Engineer, the Contractor may proceed with a subsequent Control Strip.
    i. If a 2nd or any subsequent Control Strip does not pass all of the inspection and testing requirements, the Contractor must submit proposed adjustment(s) to the LTMF and/or the production process and/or placement process.
    ii. If the computed PWL for any Quality Characteristic, with the exception of thickness, is <60 PWL, the Control Strip Lot will be determined rejected and shall be removed. If the mean thickness of the Lot is greater than the target, it may remain in place, but payment will be based upon the HMA tonnage calculated at the target thickness.
    iii. For any Control Strip that is not Verified, the Contractor shall prepare a Corrective Action Plan for the nonconforming Control Strip Lot. The corrective method(s) proposed by the Contractor shall be subject to the approval of the Department and shall be performed at the Contractor's expense.
    iv. When a Control Strip is not Verified, all subsequent Control Strips shall be tested for all applicable Quality Characteristics. For these subsequent Control Strips, no waivers will be allowed for evaluation of either plant production or field Quality Characteristics.

(6) Acceptance and Payment of Control Strips.

a. 1st and 2nd Control Strip

For each Control Strip Lot that has been Verified, payment shall be determined for each individual Quality Characteristic in accordance with the pay adjustment provisions of 450.92: Pay Adjustment.

i. If the Lot Quality Level for an individual Quality Characteristic is 90 PWL, payment for the Quality Characteristic shall be 100% of the Contractor's bid price for the pay item quantity placed on the Control Strip.
ii. If the Lot Quality Level for an individual Quality Characteristic is >90 PWL, payment for the Quality Characteristic shall be an incentive amount determined in accordance with 450.92: Pay Adjustment.

iii. If the Lot Quality Level for an individual Quality Characteristic is ≥60 PWL, but <90 PWL, payment for the Quality Characteristic shall be a disincentive amount determined in accordance with 450.92: Pay Adjustment.

iv. If the computed Quality Level for an individual Quality Characteristic is <60 PWL, the Control Strip Lot will be determined rejected and removed in accordance with 450.51: HMA Mix Design Verification and Control Strip Requirements, Part B(5) and shall receive no payment.

b. 3rd Control Strip

If a 3rd Control Strip Lot is placed and is Verified, payment shall be limited to a maximum of 75% of the Contractor's bid price for the entire pay item quantity placed on the Control Strip, regardless of the actual calculated Quality Level for the Lot.

If a 3rd Control Strip Lot is placed and is not Verified, payment shall be limited to a maximum of 70% of the Contractor's bid price for the entire pay item quantity placed on the Control Strip, regardless of the actual calculated Quality Level for the Lot.

If the computed Quality Level for an individual Quality Characteristic is <60 PWL, the Control Strip Lot will be determined rejected and removed in accordance with 450.51: HMA Mix Design Verification and Control Strip Requirements, Part B(5), and shall receive no payment.

c. 4th or Subsequent Control Strip

If a 4th or subsequent Control Strip Lot is placed and is Verified, payment shall be limited to a maximum of 65% of the Contractor's bid price for the entire pay item quantity placed on the Control Strip, regardless of the actual calculated Quality Level for the Lot.

If a 4th or subsequent Control Strip Lot is placed and is not Verified, payment shall be limited to a maximum of 60% of the Contractor's bid price for the entire pay item quantity placed on the Control Strip, regardless of the actual calculated Quality Level for the Lot.

If the computed Quality Level for an individual Quality Characteristic is <60 PWL, the Control Strip Lot will be determined rejected and removed in accordance with 450.51: HMA Mix Design Verification and Control Strip Requirements, Part B(5), and shall receive no payment.

450.52: Opening to Traffic

No vehicular traffic or loads shall be permitted on the newly completed HMA pavement until adequate stability has been attained and the material has cooled sufficiently to a temperature of 140°F or less as indicated by an infrared thermometer. The Contractor shall clearly outline, in the QC Plan, the specific criteria related to opening new pavement to traffic. The final determination to open the pavement to traffic shall be made by the Engineer and the Construction QC Manager.

HMA cores shall be obtained by the Contractor for all Sublots placed each day in accordance with the approved QC Plan prior to opening to traffic. At the discretion of the Engineer, based on climactic or other conditions, obtaining of cores may be delayed for a period up to, but not to exceed, 48 hours.

In the event of force majeure resulting from direction by the Engineer, the Contractor shall document the event and may submit a claim in accordance with current Department procedures. In

such event, the Engineer and Construction QC Manager will determine if the affected Sublots must be isolated from the relevant HMA Lot and the HMA quality be evaluated as a separate Lot.

CONTRACTOR QUALITY CONTROL

450.60: General

The Contractor shall provide a Quality Control System (QC System) and, when required, a QC Plan, adequate to ensure that all materials and workmanship meet the required quality levels for each specified Quality Characteristic. The Contractor shall provide qualified QC personnel and QC laboratory facilities and perform Quality Control inspection, sampling, testing, data analysis, corrective action (when necessary), and documentation as outlined further below.

450.61: Contractor Quality Control Plan

For projects with HMA Category A Lots (Large Lot) or Category B Lots (Small Lot), the Contractor shall provide and maintain a detailed Quality Control Plan (QC Plan). If all HMA Lots fall under Lot Category C (Minor Lot) then a QC Plan is not required. However, if any Lots on the project fall under Lot Category A or Category B, then any Category C Lots must be addressed in the QC Plan. The QC Plan should sufficiently document the QC processes of all Contractor parties (i.e. Prime Contractor, Subcontractors, Producers) performing work required under this specification. The QC Plan is not intended to be a generic document, but rather must be project specific. If a QC Plan is not required, it is still the responsibility of the Contractor to provide to the Engineer any information that is designated as "Per QC Plan" as found in this specification.

A. QC Plan Submittal Requirements.

At the pre-construction meeting, the Contractor shall be prepared to discuss the QC Plan. Information to be discussed shall include the proposed QC Plan submittal date, QC organization, and sources of materials. The Contractor shall submit one hard copy and one electronic copy of the QC Plan to the Engineer for approval not less than 30 days prior to the start of any work activities related to HMA pavement construction (including preparation of underlying surface) addressed in 450.43: Preparation of Underlying Surface through 450.52: Opening to Traffic. The Contractor shall not start work on the subject work items without an approved QC Plan.

B. QC Plan Format and Contents.

The QC Plan shall be structured to follow the format and section headings outlined in the MassDOT Model QC Plan. The pages of the QC Plan shall be sequentially numbered. The QC Plan shall address, in sufficient detail, the specific information requested under each section and subsection contained in the MassDOT Model QC Plan.

C. QC Plan Approval and Modifications.

Approval of the QC Plan will be based on the inclusion of the required information. Revisions to the QC Plan may be required prior to approval for any part of the QC Plan that is determined by the Department to be insufficient. Approval of the QC Plan does not imply any warranty by the Engineer that the QC Plan will result in completed work that complies with the specifications. It remains the responsibility of the Contractor to demonstrate such compliance. The Contractor may modify the QC Plan as work progresses when circumstances necessitate changes in Quality Control personnel, laboratories, or procedures. In such case, the Contractor shall submit an amended QC Plan to the

Department for approval a minimum of three calendar days prior to the proposed changes being implemented.

450.62: Quality Control Personnel Requirements

The Contractor's Quality Control organization shall, at a minimum, consist of the personnel outlined below that meet the described minimum qualifications. Every effort should be made to maintain consistency in the QC organization, however substitution of qualified personnel shall be allowed. When circumstances necessitate substitution of QC personnel not originally listed in the approved QC Plan, the Contractor shall submit an amended QC Plan for approval in accordance with 450.61: Contractor Quality Control Plan, Part C.

A. Construction QC Manager.

The Contractor's QC System and QC Plan shall be administered by a qualified project assigned Construction Quality Control Manager (QC Manager). The QC Manager must be a full-time employee of the Contractor or a Quality Control consultant engaged by the Contractor. The QC Manager (or their assistant in the QC Manager's absence) shall have full authority to institute any and all actions necessary for the successful implementation of this specification and the QC Plan. The QC Manager (or their assistant in the QC Manager's absence) shall be available to communicate with the Engineer at all times.

Principal responsibilities of the QC Manager shall include preparation and submittal of the Contractor's QC Plan, managing the activities of all QC personnel, communicating on quality issues within the Contractor's organization, and ensuring that all requirements outlined in the approved QC Plan are met.

The QC Manager shall be certified by the NETTCP as a Quality Assurance Technologist. For projects having only HMA Category C Lots, the Contractor may submit alternate qualifications for the QC Manager acceptable to the Department.

B. Production Facilities QC Technician(s).

All Contractor QC sampling, testing, and inspection conducted at the HMA production facility shall be performed by qualified Production Facility Quality Control Technicians (Plant QCTs). The Contractor shall provide a sufficient number of Plant QCTs to adequately implement the minimum QC requirements contained in this specification and as outlined in the approved QC Plan. A minimum of one qualified Plant QCT shall be present at each production facility location. HMA will not be accepted by the Department unless the Plant QCT is physically present at the plant during production and correctly performs the required QC inspection, testing and documentation.

All Plant QCTs shall be certified as an HMA Plant Technician by the NETTCP.

C. Laboratory Quality Control Technician(s).

Any QC testing that is performed at off-site laboratories (i.e. other than at the production facility or field site) shall be performed by qualified Laboratory Quality Control Technicians (Laboratory QCTs). The Contractor shall provide a sufficient number of Laboratory QCTs to adequately implement the minimum QC requirements contained in this specification and as outlined in the approved QC Plan.

All Laboratory QCTs shall be certified as a HMA Plant Technician by the NETTCP.

D. Field Quality Control Technician(s).

All Contractor QC sampling, testing, and inspection conducted at the HMA field placement site shall be performed by qualified Field Quality Control Technicians (Field QCTs). The Contractor shall provide a sufficient number of Field QCTs to adequately implement the minimum QC requirements contained in this specification and as outlined in the approved QC Plan. A minimum of one qualified Field QCT will be present at each field placement site. HMA will not be accepted by the Department unless the Field QCTs is physically present at the site during pre-placement and placement operations and correctly performs the required QC inspection, testing and documentation.

All Field QCTs shall be certified as a HMA Paving Inspector as certified by the NETTCP.

450.63: Quality Control Laboratory Facility Requirements

All Contractor QC testing shall be performed in laboratories qualified through the NETTCP Laboratory Qualification Program (LQP) or accredited through the AASHTO Accreditation Program (AAP). The QC laboratory shall conform to 450.30: General.

450.64: Quality Control Inspection

The Contractor shall perform QC inspection of all work items addressed under this specification. Inspection activities during HMA production and placement may be performed by qualified Production personnel (e.g. Skilled Laborers, Foremen, and Superintendents). However, the Contractor's QC personnel shall have overall responsibility for QC inspection. The Contractor shall not rely on the results of Department Acceptance inspection for Quality Control purposes. The Engineer shall be provided the opportunity to monitor and witness all QC inspection.

QC inspection activities must address the following four primary components:

1. Equipment
2. Materials
3. Environmental Conditions
4. Workmanship

The minimum frequency of QC inspection activity shall be in accordance with the requirements below and as outlined in the approved QC Plan. The results and findings of QC inspection shall be documented on NETTCP Inspection Report Forms (IRFs).

A. QC Inspection for Preparation of Underlying Surface.

The Contractor's personnel will perform QC inspection during preparation of the underlying surface in accordance with the requirements of 450.43: Preparation of Underlying Surface. The minimum items to be inspected shall be as outlined in Table 450.64-1 and Table 450.64-2. The Contractor shall identify in the QC Plan the specific inspection activities necessary to ensure the quality of the work, including any additional inspection activities not specifically listed in Table 450.64-1 and Table 450.64-2.

Table 450.64-1: Minimum QC Inspection of HMA Patching Operations

Inspection Component	Inspection Attribute	Minimum Inspection Frequency	Point of Inspection	Inspection Method
Equipment	As specified in QC Plan	Per QC Plan	Per QC Plan	Per QC Plan
Materials	Aggregates & PG Binder (Correct Type)	Per QC Plan	HMA Production Facility	Visual Check & Manufacturer COC
	HMA Mixture (Correct Type)	Per QC Plan	From Haul Vehicle at Patching Site	Visual Check & Delivery Ticket
	Joint Adhesive (Correct Type)	Per QC Plan	Per QC Plan	Check Manufacturer COC
	Temperature of HMA Mix	4 per Day (See Note 1)	From Haul Vehicle at Patching Site	Check Measurement
Environmental Conditions	Underlying Surface Soundness & Moisture	Per QC Plan	Underlying Surface	Visual Check
	Temperature of Air & Underlying Surface	1 per Day (See Note 2)	At Patching Site	Check Measurement
Workmanship	Sawcut Limit Vertical Face	Per QC Plan	Sawcut Limits	Visual Check
	Joint Adhesive Application Rate	Per QC Plan	Sawcut Limits	Check Measurement
	HMA Lift Thickness	Per QC Plan	HMA Lift	Check Measurement
	Cross-Slope & Profile	Per QC Plan	Compacted HMA	Check Measurement

Note 1: The initial temperature measurements will be taken from haul vehicles on the first or second load.
Note 2: At a minimum, the temperature measurements of the air and underlying surface shall be obtained prior to starting the HMA patching placement.

Table 450.64-2: Minimum QC Inspection of Tack Coat Operations

Inspection Component	Inspection Attribute	Minimum Inspection Frequency	Point of Inspection	Inspection Method
Equipment	As specified in QC Plan	Per QC Plan	Per QC Plan	Per QC Plan
Materials	Asphalt Emulsion (Correct Type)	Per QC Plan	Per QC Plan	Check Manufacturer COC
	Asphalt Emulsion Temperature	(See Note 1)	From Tack Distributor System	Check Measurement
Environmental Conditions	Underlying Surface Cleanliness & Moisture	Per QC Plan	Underlying Surface	Visual Check
	Temperature of Air & Underlying Surface	1 per Day (See Note 2)	At Paving Site	Check Measurement
Workmanship	Asphalt Emulsion Application Rate	(See Note 1)	From Tack Distributor System	Check Measurement

Note 1: The Asphalt Emulsion Temperature and Application Rate shall be checked as follows:
- After application of the first 1,000 lane-feet per HMA pavement course.
- After application of the next 1,500 lane-feet per HMA pavement course.
- After application of the next 2,500 lane-feet per HMA pavement course.
- Thereafter, a minimum of once per 5,000 lane-feet each day.

Note 2: As a minimum, the temperature measurements of the air and underlying surface shall be obtained prior to starting the tack coat placement.

B. QC Inspection for Production & Placement of HMA Lots.

The Contractor's QC personnel will perform QC inspection at both the HMA production facility and at the site of HMA field placement to ensure that the production and placement processes are providing work conforming to the contract requirements. The minimum items to be inspected for each HMA Lot shall be in accordance with the requirements of 450.43: Preparation of Underlying Surface through 450.52: Opening to Traffic and as outlined in Table 450.8 and Table 450.9. The Contractor shall identify in the QC Plan the specific inspection activities necessary to ensure the quality of the work, including any additional inspection activities not specifically listed in Table 450.8 and Table 450.9.

Wheel Path Deviations.

A wheel path is defined as 3 ft from and parallel to each longitudinal edge of a travel lane. Each wheel path for all HMA pavement course Lots shall be inspected for Wheel Path Deviations (high points or low points). All Transverse joints, Bridge joints, and structures that are within 3 ft of a wheel path shall be inspected for Wheel Path Deviations.

Inspection shall be performed using a 10-ft standard straightedge in the longitudinal direction on each wheel path. The Sublot size and minimum frequency of QC inspection for Wheel Path Deviations shall be as specified in Table 450.64-4, and in the approved Contractor QC Plan. Each random inspection location shall be established by determining a randomly selected distance along

the wheel path in accordance with 450.65: Quality Control Sampling and Testing Requirements, Part A. Additional selective QC inspection for Wheel Path Deviations within each Sublot of compacted HMA pavement courses shall be as determined necessary by the Field QCT and as specified in the Contractor's approved QC Plan.

The variation from the edge of the 10-ft straightedge to the top of the wheel path surface between any two contact points in the wheel path shall not exceed ¼ in. The Contractor shall correct any location in a pavement course wheel path not meeting this requirement. The corrective method(s) proposed by the Contractor shall be subject to the approval of the Engineer and shall be performed at the Contractor's expense. The Contractor shall re-inspect any Sublots where corrections are made and provide the Engineer with a copy of the inspection data for the corrected Sublots.

Table 450.64-3: Minimum QC Inspection at HMA Production Facility

Inspection Component	Inspection Attribute	Minimum Inspection Frequency	Point of Inspection	Inspection Method
Equipment	As specified in QC Plan	Per QC Plan	Per QC Plan	Per QC Plan
Materials	PG Binder (Correct Type)	Per QC Plan	HMA Production Facility	Visual Check & Manufacturer COC
	Aggregates (Correct Type)	Per QC Plan	HMA Production Facility	Visual Check
	RAP	Per QC Plan	HMA Production Facility	Visual Check
	MAS	Per QC Plan	HMA Production Facility	Visual Check & Manufacturer COC
	Release Agent	Per QC Plan	Haul Vehicle Bed at Plant	Check QCML & Visual Check & Manufacturer COC
	Temperature of HMA Mix at Plant	4 per Day (See Note 1)	From Haul Vehicle at Plant	Check Measurement
Environmental Conditions	Stockpile Moisture	Per QC Plan	HMA Production Facility	Visual Check
	Air Temperature & Precipitation Forecast	1 per Day (See Note 2)	HMA Production Facility	Check Measurement
Workmanship	Uncoated Mixture	Per QC Plan	HMA Production Facility	Visual Check
	Excess Blue Smoke or Moisture	Per QC Plan	HMA Production Facility	Visual Check
	Burnt Mix	Per QC Plan	HMA Production Facility	Visual Check
	Physical Segregation	Per QC Plan	HMA Production Facility	Visual Check

Note 1: The initial temperature measurements shall be taken from the first or second load.
Note 2: As a minimum, the air temperature measurements and precipitation forecast shall obtained prior to starting the HMA Plant operation.

Table 450.64-4: Minimum QC Inspection at HMA Placement Locations

Inspection Component	Inspection Attribute	Minimum Inspection Frequency	Point of Inspection	Inspection Method
Equipment	As specified in QC Plan	Per QC Plan	Per QC Plan	Per QC Plan
Materials	Rubberized Asphalt Sealant (Correct Type)	Per QC Plan	Per QC Plan	Check Manufacturer COC
	Temperature of Delivered HMA Mix	4 per Day (See Note 1)	From Haul Vehicle or Paver Hopper	Check Measurement
Environmental Conditions	Underlying Surface Soundness & Moisture	Per QC Plan	Underlying Surface	Visual Check
	Temperature of Air & Underlying Surface	1 per Day (See Note 2)	At Paving Site	Check Measurement
Workmanship	Joint Location & Alignment	Per QC Plan	Per QC Plan	Visual Check
	Sawcut Joint Vertical Face	Per QC Plan	Joint Vertical Face	Visual Check
	Rubberized Asphalt Sealant Application Rate	Once per 1,000 ft per joint	Joint Vertical Face	Check Measurement
	Temperature Differential in HMA Mat	Once per 500 ft per pavement course	HMA Mat Behind Paver	Per 450.47: Hot Mix Asphalt Placement, Part D
	Physical Segregation	Per QC Plan	HMA Mat Behind Paver & Compacted HMA	Visual Check
	HMA Lift Thickness	Per QC Plan	HMA Lift	Check Measurement
	Cross-Slope	Per QC Plan	Compacted HMA	Check Measurement
	Joint Tightness	Per QC Plan	Compacted HMA	Visual Check
	Joint Surface Deviations	Once per 500 ft per joint	At Finished Joint	10-ft standard straightedge
	Wheel Path Deviations	Once per 2,000 ft per Wheel Path	Wheel Path	10-ft standard straightedge

Note 1: The initial temperature measurements shall be taken from the first or second load.
Note 2: As a minimum, the temperature measurements of the air and underlying surface shall be obtained prior to starting the HMA placement.

450.65: Quality Control Sampling and Testing Requirements

The Contractor's QC personnel will perform QC sampling and testing at both the HMA production facility and at the site of HMA field placement to ensure that the production and placement processes are providing work conforming to the contract requirements. The Engineer will not sample or test for Quality Control or assist in controlling the Contractor's operations. All QC sampling and testing shall be in accordance with the current AASHTO, ASTM, NETTCP, or Department procedures specified in Table 450.65-1 and Table 450.65-2. When a test method has been updated or superseded, the superseding specification shall be used. If a test method has been removed from circulation with no replacement then that test method shall be used until otherwise noted. The Contractor shall furnish approved containers for all material samples. The Engineer shall be provided the opportunity to monitor and witness all QC sampling and testing.

A. Random Sampling.

The Contractor's QC System shall utilize stratified random sampling of each Lot produced and placed to assure that all material within the Lot has an equal probability of being selected for testing. The Contractor's qualified QC personnel shall obtain random QC samples at the minimum frequencies specified in Table 450.65-1 and Table 450.65-2. In all cases, application of the specified QC sampling frequencies shall result in a minimum of one random sample per Sublot.

Random sample locations shall be determined using the random number tables and procedures contained in ASTM D3665 or an electronic random number generator, as presented by the NETTCP. The determination of all random sample locations shall be documented on NETTCP Standard Test Report Form D3665RNG. The Contractor will provide the Engineer with the random QC sampling locations selected and documented for each Sublot prior to production and placement of the relevant Sublots.

B. Selective Sampling.

The Contractor's QC System will also utilize selective sampling (i.e. non-random samples), as needed, to provide supplemental information to assist in maintaining all production and placement processes in control. The Contractor's qualified QC personnel shall obtain selective QC samples from any Sublot as determined necessary and in accordance with the guidelines established in the approved QC Plan. Selective QC core samples shall not be obtained within a 10-ft radius of a Department random Acceptance sample. Selective QC samples shall not be used as a basis to dispute Department Acceptance test results.

C. QC Sample Identification System.

The Contractor shall establish a reliable system for the identification of all QC samples obtained. All PG Asphalt Binder samples, HMA loose mixture samples, and core samples shall be correctly labeled with the following minimum information:

(a) Contract No.
(b) Date of Sample.
(c) Bid Item Number.
(d) Mixture Type.
(e) Mixture ID Number.
(f) Lot & Sublot No.
(g) Sample No.
(h) Sample Type (i.e. Random or Selective).
(i) Sample Location (e.g. Station & Offset).

All QC sampling data for Ride Quality and Wheel Path Deviations will be identified by the Contractor as directed by the Engineer. The Contractor's system and procedures for identification of QC samples shall be outlined in the approved QC Plan.

D. Retention of Split Samples.

The Contractor's qualified QC personnel shall obtain all material samples (PGAB samples, HMA loose mix samples, and cores) for QC testing. The Contractor will retain split samples from each PGAB sample and HMA loose mix sample. If requested, these split samples will be provided to the Engineer. The Contractor shall retain the original core samples after testing to serve as "split samples" and protect them from damage. All split samples shall be properly labeled and stored for a period of 30 days, or until tested. These split samples (PGAB samples, HMA loose mix samples, and cores) will only be utilized if necessary, in the Dispute Resolution process. The retained split samples may be discarded prior to the required 30 days when agreed upon by the Contractor and the Department.

E. Quality Control Testing of Prepared Underlying Surface.

The Contractor's QC personnel will perform QC testing during preparation of the underlying surface. All QC testing shall be in accordance with the current AASHTO, ASTM, NETTCP, or Department procedures specified in Table 450.65-1. The Engineer shall be provided the opportunity to monitor and witness all QC testing.

Table 450.65-1: Minimum QC Sampling & Testing of Prepared Underlying Surface

Quality Characteristic	Test Method(s)	Sublot Size	Minimum Test Frequency	Point of Sampling	Sampling Method
HMA Patching Mixture: PG Asphalt Binder Content	AASHTO T 308	150 tons	1 per Sublot	From Haul Vehicle at Plant	Random AASHTO R 97
HMA Patching Mixture: Combined Agg. Gradation	AASHTO T 30	150 tons	1 per Sublot	From Haul Vehicle at Plant	Random AASHTO R 97
HMA Patching Mixture: Maximum Theo. Specific Gravity	AASHTO T 209 (Method A)	150 tons	1 per Sublot	From Haul Vehicle at Plant	Random AASHTO R 97
HMA Patching Mixture: In-place Density	AASHTO T 343 or T 355	100 sq. ft per each Patch Area	1 per Sublot	From Compacted HMA Patch	Random AASHTO T 343 or T 355

F. Quality Control Testing of HMA Lots.

The Contractor's QC personnel will perform QC testing at both the HMA production facility and at the site of HMA field placement to ensure that the production and placement processes are providing work conforming to the contract requirements. The Engineer shall be provided the opportunity to monitor and witness all QC testing of HMA. All QC testing of HMA Lots shall be in accordance with the current AASHTO, ASTM, NETTCP, or Department test methods specified in Table 450.65-2 and the procedures outlined below.

Table 450.65-2: Minimum QC Sampling & Testing of HMA Lots

Quality Characteristic	Test Method(s)	Sublot Size	Minimum Test Frequency	Point of Sampling	Sampling Method
PG Asphalt Binder Grading	Per M3.01.0: Performance Graded Asphalt Binder	Per Supplier QC Plan or 24,000 tons of HMA per 450.65: Quality Control Sampling and Testing Requirements, Part F(1)	See 450.65: Quality Control Sampling and Testing Requirements, Part F(1)	See 450.65: Quality Control Sampling and Testing Requirements, Part F(1)	Random AASHTO R 66
RAP Asphalt Binder Content	AASHTO T 308	Per QC Plan	Per QC Plan	At HMA Plant Per QC Plan	Random AASHTO R 90
RAP Gradation	AASHTO T 30	Per QC Plan	Per QC Plan	At HMA Plant Per QC Plan	Random AASHTO R 90
Aggregate Gradation	AASHTO T 27	Per QC Plan	Per QC Plan	At HMA Plant Per QC Plan	Random AASHTO R 90

Quality Characteristic	Test Method(s)	Sublot Size	Minimum Test Frequency	Point of Sampling	Sampling Method
PG Asphalt Binder Content	AASHTO T 308	600 tons	1 per Sublot (See Note 1)	From Haul Vehicle at Plant	Random AASHTO R 97 and R 47
Combined Aggregate Gradation	AASHTO T 30	600 tons	1 per Sublot (See Note 1)	From Haul Vehicle at Plant	Random AASHTO R 97 and R 47
Maximum Theo. Specific Gravity	AASHTO T 209 (Method A)	600 tons	1 per Sublot (See Note 1)	From Haul Vehicle at Plant	Random AASHTO R 97 and R 47
Bulk Specific Gravity	AASHTO T 166 (Method A)	600 tons	1 per Sublot (See Note 1)	From Haul Vehicle at Plant	Random AASHTO R 97 and R 47
Bulk Specific Gravity (OGFC)	AASHTO T 331	1 Day's Production	1 per Sublot (See Note 1)	From Haul Vehicle at Plant	Random AASHTO R 97 and R 47
Volumetrics: Air Voids, VMA, VFA	AASHTO T 312 and R 35	600 tons	1 per Sublot (See Note 1)	From Haul Vehicle at Plant	Random AASHTO R 97 and R 47
In-place HMA Mat Density (Density Gauge)	AASHTO T 343 or T 355	150 tons	1 per Sublot (See Note 1)	From Compacted HMA Course	Selective & Random AASHTO T 343 or T 355
In-place HMA Mat Density (Cores)	AASHTO T 269	600 tons	1 per Sublot (See Note 1)	From Compacted HMA Course	Random AASHTO R 67
Thickness	ASTM D3549	600 tons	1 per Sublot (See Note 1)	From Compacted HMA	Random AASHTO R 67
Transverse Joint Density	AASHTO T 343 or T 355	Each Joint	1 per Sublot (See Note 1)	At Finished Joint	Random AASHTO T 343 or T 355
Longitudinal Joint Density	AASHTO T 343 or T 355	500 ft per Joint	1 per Sublot (See Note 1)	At Finished Joint	Random AASHTO T 343 or T 355
Ride Quality (IRI)	AASHTO R 54 per 450.65: Quality Control Sampling and Testing Requirements, Part F(11)	0.1 miles per each Wheel Path	3 Runs per Sublot	Each Pavement per 450.65: Quality Control Sampling and Testing Requirements, Part F(11)	Random per 450.65: Quality Control Sampling and Testing Requirements, Part F(11)

Note 1: In the event that the total daily HMA production is less than one Sublot, a minimum of one random QC sample shall be obtained for the day's production.

(1) PG Asphalt Binder Grading.

QC testing of PG Asphalt Binder shall be performed by the PGAB Supplier in accordance with AASHTO R 26 and the Supplier's approved PGAB QC Plan. The Contractor shall submit to the Engineer the Supplier's Certificate of Compliance (COC) along with copies of the Certificate of Analysis (COA) showing the certified test results for each Supplier Lot of PGAB from which the HMA Producer's PGAB was obtained. A copy of the COA and a copy of all Bill of Ladings (BOL) for the Lot of PGAB being used shall be kept in the Contractor's QC laboratory. For crumb rubber modified asphalt binder the Contractor shall submit the COC, COA, and BOLs for the virgin unmodified binder. The Contractor shall also provide the COC and BOLs for the crumb rubber and documentation that it was added to the virgin binder at the required dosage.

If the Contractor adds to or modifies the PGAB at the HMA production facility through blending or introduction of an asphalt binder modifier, the Contractor (i.e. HMA Producer) shall assume responsibility as the PGAB Supplier per AASHTO R 26. In such case, the Contractor shall obtain and test a minimum of one random sample of the modified PGAB for each 24,000-ton HMA Sublot, as defined in Table 450.65-2, to determine conformance with with M3.01.0: Performance Graded Asphalt Binder..

A minimum of two 1-qt containers of PGAB shall be obtained for each PGAB sample in accordance with AASHTO R 66. All QC samples shall be split prior to testing and the untested portion of the sample shall be retained for a minimum of 30 days.

For HMA Category A Lots incorporating greater than 25% RAP by weight of the mix in the job-mix formula, the Contractor shall perform full asphalt binder grade testing on a minimum of one random sample from the Control Strip and from each Sublot as specified in Table 450.65-2 during HMA Lot production. The QC testing shall follow the procedures for developing a blending chart as provided in AASHTO M 323 Appendices X1 to X3. The PG Asphalt Binder Grade test results, as depicted by the blending chart, shall conform to the specified PGAB grade for the HMA pavement course mixture.

(2) Aggregate Gradation.

The virgin aggregates utilized in each HMA Lot shall be tested for Gradation in accordance with AASHTO T 27. The Sublot size and minimum frequency of QC testing for Aggregate Gradation shall be as specified in the Contractor's approved QC Plan. Aggregate samples shall be obtained at the HMA plant from aggregate bins or stockpiles in accordance with AASHTO R 90.

(3) PG Asphalt Binder Content.

Each HMA Lot produced and placed shall be tested for PG Asphalt Binder Content in accordance with AASHTO T 308. The Sublot size and minimum frequency of QC testing for PG Asphalt Binder Content shall be as specified in Table 450.65-2. Each material sample for PG Asphalt Binder Content shall be obtained at the HMA plant from a randomly selected quadrant from the haul vehicle in accordance with 450.65: Quality Control Sampling and Testing Requirements, Part A and AASHTO R 97 and R 47.

(4) Combined Aggregate Gradation.

Each HMA Lot produced and placed shall be tested for Combined Aggregate Gradation in accordance with AASHTO T 30. The Sublot size and minimum frequency of QC testing for Combined Aggregate Gradation shall be as specified in Table 450.65-2. Each material sample for Combined Aggregate Gradation shall be obtained at the HMA plant from a randomly selected quadrant from the haul vehicle in accordance with 450.65: Quality Control Sampling and Testing Requirements, Part A and AASHTO R 97 and R 47.

The QC test results of Combined Aggregate Gradation must be plotted on Control Charts with Action Limits. Minimum Action Limits are provided in Table 450.65-3, however, the Action Limits to be used for each HMA Lot shall be as specified in the Contractor's approved QC Plan. If the QC test results for an individual Sublot fall outside of the established Action Limits, the Contractor shall evaluate the HMA production process and determine any adjustments necessary to bring the Combined Aggregate Gradation back within the Action Limits. If the subsequent Sublot test result falls outside of the Action Limits, the Contractor shall suspend Lot production until it can be demonstrated that the HMA mixture can be produced within the Action Limits. The Contractor's QC personnel shall document all action(s) taken to bring the HMA production process into control.

Table 450.65-3: Minimum Action Limits for Combined Aggregate Gradation

Sieve Size	Action Limit
Passing No. 4 Sieve and larger sieve sizes	JMF Target ±6 percent
Passing No. 8 sieves	JMF Target ±5 percent
Passing No. 16 to No. 50 sieves (inclusive)	JMF Target ±3 percent
Passing No. 100 sieve	JMF Target ±2 percent
Passing No. 200 sieve	JMF Target ±1 percent

(5) Maximum Theoretical Specific Gravity.

Each HMA Lot produced and placed shall be tested for Maximum Theoretical Specific Gravity in accordance with AASHTO T 209 Method A. The Sublot size and minimum frequency of QC testing for Maximum Theoretical Specific Gravity shall be as specified in Table 450.65-2. Each material sample for Maximum Theoretical Specific Gravity shall be obtained at the HMA plant from a randomly selected quadrant from the haul vehicle in accordance with 450.65: Quality Control Sampling and Testing Requirements, Part A and AASHTO R 97 and R 47.

(6) Bulk Specific Gravity.

Each HMA Lot produced and placed shall be tested for Bulk Specific Gravity in accordance with AASHTO T 166 (Method A). OGFC shall be tested in accordance with AASHTO T 331. The Sublot size and minimum frequency of QC testing for Bulk Specific Gravity shall be as specified in Table 450.65-2. Each material sample for Bulk Specific Gravity shall be obtained at the HMA plant from a randomly selected quadrant from the haul vehicle in accordance with 450.65: Quality Control Sampling and Testing Requirements, Part A and AASHTO R 97 and R 47.

(7) Volumetrics (Air Voids, VMA, VFA).

Each HMA Lot produced and placed shall be tested for Volumetrics (Air Voids, VMA, VFA) in accordance with AASHTO T 312 and R 35. The requirement for Volumetric testing of laboratory compacted specimens applies to all HMA mixtures designed by the Superpave volumetric method. The Sublot size and minimum frequency of QC testing for Volumetrics shall be as specified in Table 450.65-2. Each material sample for Volumetrics shall be obtained at the HMA plant from a randomly selected quadrant from the haul vehicle in accordance with 450.65: Quality Control Sampling and Testing Requirements, Part A and AASHTO R 97 and R 47.

(8) In-place HMA Mat Density.

Each HMA Lot produced and placed shall be tested for In-place Density using a density gauge or cores as specified below. The requirement for In-Place Density testing applies to all pavement courses, with the exception of OGFCs and Leveling Courses. The Sublot size and minimum frequency of random QC testing for In-place Density by either density gauge or core shall be as specified in Table 450.65-2.

(a) Testing In-Place Density by Density Gauge.

Initial QC testing of In-Place Density during compaction of HMA pavement courses shall be performed selectively (or randomly when determined appropriate by QC personnel) using a density gauge in accordance with AASHTO T 343 or T 355. QC testing of In-Place Density for all HMA Bridge Protective Courses and Bridge Surface Courses shall be performed randomly using a density gauge. Each random sampling and testing location for HMA bridge courses shall be established by determining a randomly selected tonnage and corresponding approximate longitudinal distance within the Sublot, along with a randomly selected offset distance in accordance with 450.65: Quality Control Sampling and Testing Requirements, Part A. Additional selective QC sampling and testing within each Sublot of compacted HMA Bridge Protective Courses or Bridge Surface Courses shall be as determined necessary by the Contractor's QC personnel and as specified in the Contractor's approved QC Plan.

The density gauge shall be calibrated at least once every 12 months in accordance with the applicable test method and Manufacturer's recommendations. Calibration certificates shall be kept with the gauge and a copy shall be provided to the Engineer upon request. This calibration does not include calibration of the gauge to the specific HMA pavement placed.

(b) Testing In-Place Density by Cores.

Final QC testing of In-Place Density of all applicable HMA pavement courses shall be performed using 6-in. diameter cores in accordance with AASHTO T 269. Cores shall not be obtained from Bridge Protective Courses and Bridge Surface Courses. In-Place Density shall be determined from each core by comparing the Bulk Specific Gravity of the core to the average Maximum Theoretical Specific Gravity for all HMA mixture Sublots produced for the pavement course on the same day's production. Each core location shall be established by determining a randomly selected tonnage and corresponding approximate longitudinal distance within the Sublot, along with a randomly selected offset distance in accordance with 450.65: Quality Control Sampling and Testing Requirements, Part A. If the randomly determined sampling location coincides with one of the following conditions, the sampling location shall be relocated immediately beyond the boundary distance as indicated below for the specific condition:

a) Within 1 ft from an edge of pavement course to be left unconfined upon project completion.
b) Within 1 ft of any longitudinal joint or transverse joint.
c) Within 3 ft of any drainage structure.
d) For shoulders less than or equal to 3 ft, the shoulder width shall be excluded from random sampling.

Core samples shall be obtained in accordance with AASHTO R 67 prior to opening the pavement course to traffic. To protect the integrity of the core, when the target lift thickness is less than 1.5 in., the Contractor shall drill so that the sampled core is comprised of at least the lift to be tested as well as the lift immediately below. At the discretion of the Engineer, based on climactic or other conditions, sampling of cores may be delayed for a period up to, but not to exceed, 48 hours. All cores shall be protected against damage and tested within 24 hours after they have been obtained. The Contractor shall fill all core holes, whether from QC sampling or Department Acceptance sampling, with fresh HMA mixture from the same Lot. The filled core holes shall be thoroughly compacted as outlined in the Contractor's approved QC Plan.

(9) Thickness.

Each HMA pavement course specified to be placed at a compacted thickness of 1 in. or greater shall be tested for Thickness using cores, with the exception of the following courses:

- Open-Graded Friction Course.
- Bridge Surface Course.
- Bridge Protective Course.
- Leveling Course.
- In the absence of a Leveling Course, the first pavement course placed over existing pavement. A milled surface is not considered an existing pavement. HMA placed on top of a milled surface shall be subject to thickness testing unless it is one of the previous 4 courses listed above, or if the milling operation, approved by the Engineer, caused the pavement thickness to vary.

The aforementioned pavement courses are exempt only from determination of Thickness using cores and the corresponding statistical evaluation of Lot quality. The Contractor is still responsible for ensuring the minimum required thickness of these pavement courses using an appropriate sampling and testing protocol as outlined in the Contractor's approved QC Plan. The mean thickness will be in accordance with 450.74: Acceptance Sampling & Testing, Part F(6).

All sampling and testing for Thickness of the applicable pavement courses using cores shall be in accordance with AASHTO R 67 and ASTM D3549, respectively. Core thickness shall be reported to the nearest $^{1}/_{16}$ in. The Sublot size and minimum frequency of random QC testing for Thickness shall be as specified in Table 450.65-2.

(10) Joint Density.

Each transverse joint and longitudinal joint formed during placement of a pavement course shall be tested for Joint Density using a density gauge in accordance with AASHTO T 343 or T 355. The requirement for Joint Density testing applies to all pavement courses, with the exception of Open-Graded Friction Courses and Leveling Courses. The Sublot size and minimum frequency of random QC testing for Joint Density shall be as specified in Table 450.65-2.

Each random sampling and testing location shall be established by determining a randomly selected distance along the joint, along with a randomly selected offset distance within 1 ft of either side of the finished joint, in accordance with 450.65: Quality Control Sampling and Testing Requirements, Part A. Additional selective QC sampling and testing of Joint Density within each Sublot of compacted HMA pavement courses or Bridge Protective Surface Courses shall be as determined necessary by the Field QCT and as specified in the Contractor's approved QC Plan.

(11) Ride Quality.

The finished surface of the pavement shall be uniform in appearance, free from irregularities in contour and texture and shall present a smooth riding surface. Ride Quality testing shall be performed for Quality Control on a periodic basis during construction of the HMA pavement courses specified below. QC testing shall be performed for HMA Category A Lots, at a minimum, within 48 hours after each 8 lane-miles of an individual pavement course have been placed. QC testing of HMA Category B Lots shall be performed, at a minimum, every other paving day. In addition, the Contractor shall perform QC testing of the entire final pavement course placed upon completion.

(a) Pavement Courses Subject to Ride Quality Testing.

For projects having a posted speed equal to or greater than 40 mph with HMA Lots falling under Lot Category A (Large Lots) or Category B (Small Lots), QC testing shall be performed with an inertial profiler to determine the Ride Quality of the following pavement courses:

- Friction Course
- Surface Course
- Intermediate Course (lift immediately beneath Surface Course only)
- Leveling Course (when placed immediately beneath Surface Course)
- Bridge Surface Course (when asphaltic bridge joints are used and when placed on the same contract with the mainline Surface Course)

At a minimum, the finished surface of these pavement courses will be tested for all mainline travel lanes, auxiliary lanes, ramps, and side road travel lanes. The Contractor may also elect to perform Ride Quality testing of the pavement courses beneath the courses indicated above in order to provide adequate Quality Control.

(b) Pavement Courses Excluded from Ride Quality Testing.

The following pavement courses and surfaces are specifically excluded from Ride Quality testing:

- All exposed concrete bridge decks and any Bridge Surface Course without asphaltic bridge joints (including 15 ft before the approach joint and 15 ft after the departure joint).
- Mainline pavement courses less than ½ mi in total length (excluding bridge lengths).
- Side road pavement courses less than one Sublot (0.1 mi) in total length.
- Single resurfacing pavement courses placed in one lift at a total plan (compacted) thickness less than 1.5 in. when not placed over a milled surface.
- Pavement courses on horizontal curves having a centerline radius of curvature of 500 ft or less, including the length of pavement within the super-elevation transition of such curves.
- Pavement courses for shoulders.

- Pavement segments with manholes or catch basins in the travel lane (the Ride Quality testing data for such pavement segments shall be excluded, including 15 ft before and after these manholes or catch basins).

(c) Inertial Profiler Equipment Requirements.

All inertial profilers used for Contractor QC testing shall conform to the equipment specifications contained in AASHTO M 328. The inertial profiler shall be equipped with a system of transducers (height sensor, accelerometer, distance sensor) to measure the longitudinal pavement profile. An automated triggering system shall be provided that detects a reference mark to start, stop, and event mark the data collection process. The profiler equipment shall include an onboard computer system capable of storing all profile measurement data, calculating the real time International Roughness Index (IRI) per ASTM E1926 (independent of speed), and displaying profile plots.

(d) Certification and Correlation of Inertial Profilers.

All inertial profilers used for Contractor QC testing must be certified for precision and accuracy in accordance with the requirements of AASHTO R 56. In addition, all Contractor QC profilers must be correlated against the Department's reference profiling device in accordance with the Department's correlation procedures. The certification and correlation of all profilers shall be conducted at MassDOT's designated Profiler Correlation Center. The certification and initial correlation of the Contractor's inertial profiler shall be completed prior to the start of Ride Quality testing on the project. After the initial correlation is successfully completed, the same inertial profiler can be used on any Department project without re-correlation for the remainder of the construction season. Equipment that does not pass the Department's correlation procedure shall not be used. The Contractor's use of inertial profiler equipment that has not been successfully correlated is sufficient grounds for withholding payment for QC testing of Ride Quality. The Contractor's inertial profiler equipment may be required to undergo re-correlation at any time during the construction season if significant variations are found within the Contractor's QC test data or between the QC test data and the Department's Acceptance test data.

Contractor QC inertial profilers must be on the QCML.

(e) Ride Quality Test Procedures.

Ride Quality testing shall be performed in accordance with the procedures outlined in AASHTO R 57, as clarified or amended herein.

The Ride Quality will be measured for each wheel path (a wheel path is defined as 3 ft from and parallel to each longitudinal edge of the lane to be measured). Each wheel path will be divided into 0.1-mile Sublots starting at the project limits in the direction of traffic. Partial Sublots may result at either end of the project or as a result of interruptions of the continuous pavement surface (i.e. bridge approaches, railroad crossing, cessation of daily paving operations, etc.).

Just prior to testing, the Contractor shall sweep the pavement and remove all foreign objects or materials on the pavement course surface. Testing will begin 15 ft after the transverse approach joint and end 15 ft before the transverse departure joint. A minimum of three and up to a maximum of five test runs will be performed on each wheel path. The final test result for each Sublot will be the average of the three best test runs.

(f) Data Format and Reporting Requirements.

All Ride Quality QC testing data shall be collected and saved in electronic format in an ASCII data file. A copy of the raw data file shall be provided to the Engineer on site immediately following testing of completed Sublots. A longitudinal profile shall be determined for all Sublots tested and an average IRI value shall be determined and reported for each Sublot (i.e. each 0.1-mile segment of each wheel path). The Contractor shall summarize the results for all Sublots, by corresponding Ride Quality Lot, in an electronic spreadsheet file (MS Excel) consistent with the format of the Department's QA Spreadsheets. The summary spreadsheet of QC testing data shall be submitted to the Department, electronically and in hardcopy, within two days after the testing is completed.

(g) Ride Quality Monitoring & Corrective Action.

The Contractor shall evaluate and monitor the test data for each pavement course requiring Ride Quality testing for conformance with the applicable Quality Limits specified in Tables 450.77-1, 450.77-2, or 450.77-3. If the running Quality Level for all Sublots placed and tested falls below the Suspension Quality Level (SQL) of 70 PWL, the Contractor shall suspend further placement of the corresponding pavement course and evaluate the Sublots placed for appropriate corrective action. If the running Mean IRI of all Sublots placed and tested for the pavement course immediately below the final course is greater than the Action Limits specified in Table 450.65-4, corrective action will be required prior to placement of the final pavement course.

When Ride Quality correction is required, the Contractor shall use one or more of the following corrective methods:

a) Removal and replacement of the entire pavement course.
b) Partial depth removal of the pavement course by milling and placement of new pavement course(s) of the same mixture type.
c) Overlaying (not patching) with the specified pavement course.
d) Diamond grinding or use of other surface profiling devices.

The corrective method(s) chosen by the Contractor shall be subject to the approval of the Department and shall be performed at the Contractor's expense. The Contractor shall retest any Sublots where corrections are made and provide the Department with a copy of the raw data file, the profile plot, and the IRI summary spreadsheet data for the corrected Sublots.

Table 450.65-4: Action Limits for Pavement Course Below Final Pavement Course

Posted Speed Limit (See Note 1)	Target IRI	Maximum Running Mean IRI of All Sublots Tested
≥55 mph	60 in./mi	≤85 in./mi
≥40 but <55 mph	80 in./mi	≤105 in./mi
<40 mph	Not subject to Ride Quality testing	N/A
Note 1: Projects with posted speed limits that fall into more than one of the Posted Speed Limit ranges above will be divided into multiple Lots and evaluated separately.		

450.66: Quality Control Documentation and Data Evaluation

A. QC Inspection Documentation & Evaluation.

The Contractor shall document all QC inspection activities for each HMA Lot Category (Category A, B, or C) produced and placed. All inspection results shall be recorded within 24 hours of inspection on current NETTCP standard IRFs. The QC Manager shall evaluate inspection results in a timely manner to confirm that production and placement processes are in control. The Contractor shall submit hard copies of all IRFs to the Engineer at the completion of each Lot.

B. QC Sampling and Testing Documentation & Data Analysis.

The Contractor shall document all QC sampling and testing data for each HMA Lot Category (Category A, B, or C) produced and placed. All sampling and testing data shall be recorded within 24 hours of sampling and testing on current NETTCP standard TRFs. The QC Manager shall evaluate sampling and testing results in a timely manner, as further outlined below, to confirm that production and placement processes are in control. All QC testing data shall be entered into the Department's QA Data Spreadsheets within 2 days after completion of testing. The Contractor shall submit hard copies of all TRFs to the Engineer at the completion of each Lot.

(1) Control Charts.

For each HMA Category A Lot produced and placed, the Contractor shall use Control Charts as part of the QC System to assist in identifying assignable causes affecting the HMA production and placement processes. Control Charts shall be prepared for the Quality Characteristics subject to QC sampling and testing listed in Table 450.65-2. As a minimum, the Contractor shall plot all QC test results of each Lot on Control Charts for individual Sublot measurements or test values (Run Charts). It is also recommended practice for the Contractor to use Control Charts that plot Subgroups of data (e.g. X-Bar Charts, R Charts). The Contractor shall submit examples of the Control Charts to be used in the QC Plan. As a minimum, the Control Charts shall identify the Contract number, the Payment Item number, the Lot number, the Quality Characteristic, the Control Chart Target, the Upper and Lower Control Chart Limits, and Sublot or Subgroup numbers.

All Control Charts should be updated within 24 hours after the corresponding testing is completed and documented. QC personnel should use the Control Chart data to monitor and adjust the production and placement processes or suspend operations as determined necessary. Control Charts for Quality Characteristics related to HMA production should be maintained at the HMA production facility. Control Charts for Quality Characteristics related to HMA field placement should be maintained at the project field site. Current Control Charts shall be posted in an accessible location. The Engineer shall be provided access to all Control Charts as part of the Department's monitoring of Contractor QC activity.

(2) Evaluation of Individual Sublot QC Test Results.

The Contractor shall evaluate the individual QC test results for each HMA Lot Category (Category A, B, or C) produced and placed. Each random QC test result shall be evaluated against the applicable Quality Limits within 24 hours of testing. Each Sublot test value shall be within the applicable Engineering Limits specified in Tables 450.77-1, 450.77-2, or 450.77-3.

If the evaluation of the QC testing data indicates that an individual Sublot is not in conformance with the applicable Engineering Limits, the Contractor shall follow the requirements of 450.67: Corrective Action.

(3) Evaluation of Lot Quality Level.

For HMA Category A Lots and Category B Lots, the Contractor shall use all random QC test results to continuously evaluate the running quality level and determine the Percent Within Limits (PWL) for each Lot during production and placement. The PWL shall be determined through Quality Level Analysis (QLA) for each of the applicable Quality Characteristics listed in Tables 450.77-1, 450.77-2, or 450.77-3 using the corresponding Specification Limits therein. The Contractor shall perform a running QLA using random QC data only after a minimum of 5 Sublots have been tested and shall plot the cumulative PWL after each 5 Sublot interval. The Engineer shall be provided access to all records documenting the running QLA for each Lot as part of the Department's monitoring of Contractor QC activity.

If the running QLA shows the PWL falling below the Acceptable Quality Level (AQL) of 90 PWL, the Contractor shall initiate appropriate adjustments to the production or placement process or initiate corrective action in accordance with procedures outlined in the approved QC Plan. If the PWL falls below the SQL of 70 PWL, the Contractor shall suspend production and placement of the Lot prior to any subsequent Sublots being placed. The Contractor shall prepare a plan of corrective action for any nonconforming Lot, as further outlined below.

a) If the corrective action requires a significant adjustment to the JMF or the production or placement process, a new Lot will be established. If any of the JMF target values are changed, creating a new DMF according to AASHTO R 42, then a new Lot will be established. For Category A Lots, a Control Strip will be required upon the establishment of a new Lot. After resuming production and placement, the PWL for the new Lot must be back at or above the AQL of 90 PWL once the Lot PWL can be calculated.
b) If the corrective action does not require a new Lot to be established, then the PWL must return to 70 or above within 6 Sublots.
c) If the Lot PWL falls below 70 for more than 6 Sublots, then any material that is placed from the time that the PWL falls below 70 to when the PWL returns to 70 or above will be determined rejected and removed and shall receive no payment.

450.67: Corrective Action

As part of the Contractor's QC System, the Contractor shall implement corrective action for any part of a Lot that is determined by inspection or testing to not be in conformance with the quality requirements specified in this specification. If the results of QC inspection identify nonconforming material or workmanship within one or more Sublots, or if the evaluation of the QC testing data indicates that any Sublot is not in conformance with the applicable Quality Limits for the particular HMA Lot Category, the Contractor shall isolate the Sublot(s) and perform additional inspection or testing to further assess the quality of the Sublot. Selective inspection or testing should be used to determine the limits of non-conformance. If a Sublot test result is outside of the Engineering Limits, the QC Manager and the Engineer will further assess the Sublot quality to determine whether the material in the Sublot can remain in place in accordance with 450.77: Lot Acceptance Determination Based on Testing Data, Part A(2).

Based on the results of additional inspection or testing, the Contractor shall prepare a plan of corrective action for the nonconforming Sublot(s). The corrective action plan shall be submitted to and approved by the Engineer prior to initiating corrective action. All corrective action shall be performed at the Contractor's expense.

450.68: Quality Control Records System

A. QC Daily Diary.

The QC Manager should maintain a Quality Control Daily Diary (QC Daily Diary) to document all major activities or actions related to the Contractor's QC System. The QC Daily Diary serves as a summary record of key actions taken by QC personnel each day. Recommended Information which should be recorded in the QC Daily Diary includes:

- The day's weather or environmental conditions.
- A summary of production or placement activities completed.
- Any non-conforming material or workmanship identified.
- Any corrective actions recommended or taken by QC personnel.
- Discussions held with other Contractor personnel or Department personnel.
- Visitors to the production facility or field placement operation.

B. QC Record Books.

The Contractor shall maintain one or more ringed binders referred to as "Quality Control Record Books" (QC Record Books) to store all required QC documents. Separate QC Record Books shall be kept at each HMA production facility and at the project field site. Either a separate QC Record Book shall be established for each HMA pavement course or the data for each pavement course may be included in a single QC Record Book provided the data is separated according to pavement course. QC data for each pavement course shall be organized into separate sections by Quality Characteristic and by Lot number.

QC documents to be stored in the QC Record Book(s) include:

- A signed copy of the current approved QC Plan.
- The original signed copies of all completed IRFs.
- The original signed copies of all completed Random Sampling location forms.
- The original signed copies of all completed TRFs.
- A current copy or printout of all Control Charts.
- A current copy or printout of all running QLA performed.
- Current summaries of all individual QC test results to date (by Lot & Sublot).
- Summary sheets of material quantities produced or placed (by Lot & Sublot).

Each required record shall be inserted into the corresponding QC Record Book within 24 hours after the document has been completed. All QC Record Books shall be maintained in a suitable location. The Engineer shall be provided access to all QC Record Books as part of the Department's monitoring of Contractor QC activity.

In addition to entering all QC test results to the QA Data Spreadsheets, QC personnel shall also upload, to the MassDOT QA SharePoint site, all QC IRFs and TRFs for each day of production within

2 days after completion of testing and inspection. QC personnel shall also track the daily tonnage of HMA which leaves the production facility and the quantity that is actually placed on the project site.

C. QC Records Retention.

All Contractor QC records identified above shall be retained for a minimum of 7 years. The records shall be protected from damage or alteration. When requested by any State or Federal Agency for audit or similar purposes, the Contractor shall provide complete access to all QC records.

D. Failure to Provide QC Records

The Contractor shall provide the Engineer with requested QC records within 48 hours of the request. Failure to provide the documentation in the required timeframe will result in the removal of all Validated QC test results from the Analysis of the Lot Quality Level as specified in 450.77: Lot Acceptance Determination Based on Testing Data and no incentive will be paid for any of the Quality Characteristics.

DEPARTMENT ACCEPTANCE

450.70: General

The Department is responsible for performing all Acceptance activities and making the final Acceptance determination for each HMA Lot produced and placed. The Department's Acceptance System will include monitoring the Contractor's QC activity and performing Acceptance inspection, sampling and testing in order to determine the Quality and corresponding payment for each Lot. These activities will be performed for each HMA Lot Category (Lot Category A, B, and C) as outlined further below.

450.71: Acceptance System Approach

A. Acceptance of Category A Lots.

The Engineer's Acceptance determination for each HMA Category A Lot will be based on an evaluation of the Department's Acceptance inspection information and testing data. The Engineer will perform Acceptance sampling and testing on a minimum of 25% and a maximum of 100% of the Sublots produced and placed. Contractor QC test data will be included in the Department's Acceptance determination for each Category A Lot provided the following requirements are met:

a) Split Sample Correlation testing requirements are satisfied.
b) The Contractor provides adequate Quality Control per the approved QC Plan.
c) All QC test results included are from random samples.
d) The QC test results are Validated against the Department's Acceptance test results.

B. Acceptance of Category B Lots.

The Engineer's Acceptance determination for each HMA Category B Lot will also be based on an evaluation of the Department's Acceptance inspection information and Acceptance testing data. The Engineer will perform Acceptance sampling and testing on a minimum of 50% and a maximum of 100% of the Sublots produced and placed, but not less than 3 Sublots. Contractor QC test data will be included in the Department's Acceptance determination for each Category B Lot provided the requirements outlined in Part A above are satisfied.

C. Acceptance of Category C Lots.

For all HMA Category C Lots, the Engineer's Acceptance determination will be based only on the Department's Acceptance inspection information and Acceptance testing data. The Engineer will perform Acceptance sampling and testing on 100% of the Sublots produced and placed. Contractor QC test data will not be included in the Department's Acceptance determination for Category C Lots.

450.72: Department Monitoring of Contractor Quality Control

The Department will monitor the Contractor's QC System to confirm that QC activities are being performed for each Lot in compliance with this specification and the approved QC Plan. Department monitoring of the Contractor's QC System is not intended to evaluate the quality of the work. The Engineer will not perform the QC responsibilities of the Contractor or provide constant direction to the Contractor on how to perform Quality Control. The Engineer's monitoring of QC activity will include the following:

- Periodic visual observation of QC inspection, sampling, and testing.
- Reviewing QC documentation and records.
- Providing feedback based on monitoring findings.

When deficiencies in the Contractor's QC System are identified and documented by the Engineer, the Contractor shall take immediate action to address the deficiencies. Deficiencies related to HMA Quality Characteristics where a QLA is performed shall not be considered under this subsection. If the material in an HMA Lot where deficiencies in the Contractor's QC System were identified is removed and replaced, and the replacement HMA complies with the Specification requirements, the actions listed below will not apply. If the Contractor fails to acknowledge the deficiency and take appropriate action, the Contractor shall suspend production and placement of the corresponding Lot(s). Failure by the Contractor to comply with the Quality Control requirements in either this specification or the approved QC Plan will result in the following actions:

a) 1st Incident: A Non-conformance Report (NCR) will be issued by the District Quality Engineer. A follow-up Construction Quality Meeting will be held in accordance with 450.40: General.
b) 2nd Incident: An NCR will be issued by the District Quality Engineer and work shall be immediately suspended until compliance with the specification and approved QC Plan is established. The Engineer shall issue a Deficiency Report (DR) with a deduction of 1% of the awarded contract Bid Price amount for all tonnage placed for the HMA Lot(s) where the violations were documented. Work shall not resume until a follow-up Construction Quality Meeting is held in accordance with 450.40: General.
c) 3rd Incident: An NCR will be issued by the District Quality Engineer and work shall be immediately suspended until compliance with the specification and approved QC Plan is established. The Engineer shall issue a DR with a deduction of 2% of the awarded contract Bid Price amount for all tonnage placed for the HMA Lot(s) where the violations were documented. The deduction will be in addition to the deduction amount from the second incident. Work shall not resume until a follow-up Construction Quality Meeting is held in accordance with 450.40: General.
d) 4th and Subsequent Incidents: An NCR will be issued by the District Quality Engineer and work shall be immediately suspended until compliance with the specification and approved QC Plan is established. The Engineer shall issue a DR with a deduction of 3% of the awarded

contract Bid Price amount for all tonnage placed for the HMA Lot(s) where the violations were documented. The deduction will be in addition to the deduction amount from the previous incidents. An additional deduction of 1% of the awarded contract Bid Price amount for all tonnage placed for the HMA Lot(s) where the violations were documented will be added for each additional occurrence beyond the 4th. Work shall not resume until a follow-up Construction Quality Meeting is held in accordance with 450.40: General. The Contractor may also be required to replace the Construction QC Manager.

Failures in the Contractor QC System shall result in taking the actions listed above as well as any corrective action to the HMA pavement deemed necessary by the Engineer.

450.73: Acceptance Inspection

The Engineer will perform Acceptance inspection of all work items addressed under this specification to ensure that all materials and completed work are in conformance with the contract requirements. Acceptance inspection is intended to visually assess the quality of each HMA Lot produced and placed and will address only the inspection components of Materials and Workmanship in support of the Department's final acceptance determination.

All Acceptance inspection activity by the Department will be performed independent of the Contractor's QC inspection at both the HMA production facility and at the site of HMA field placement. The Engineer will document the results and findings of Acceptance inspection on NETTCP IRFs. The Engineer will furnish a copy of all Department Acceptance inspection results to the Contractor within 5 days following the inspection.

A. Acceptance Inspection of Prepared Underlying Surface.

The Department will perform Acceptance inspection of the prepared underlying surface prior to placement of HMA. The items to be inspected and minimum frequency of inspection will be in accordance with the requirements outlined in Table 450.73-1 and Table 450.73-2.

Table 450.73-1: Department Acceptance of HMA Patching

Inspection Component	Inspection Attribute	Minimum Inspection Frequency	Point of Inspection	Inspection Method
Materials	Mixture Type & PG Binder Grade (Correct Type)	1 per Day	HMA Production Facility	Visual Check & Manufacturer COC
	Joint Adhesive (Correct Type)	1 per Day	At Paving Site	Check Manufacturer COC
Workmanship	Sawcut Limit Vertical Face	25% of Patched Areas	Sawcut Limits	Visual Check
	Joint Adhesive Application Rate	25% of Patched Areas	Sawcut Limits	Visual Check & Check Measurement
	Cross-Slope & Profile	25% of Patched Areas	Compacted HMA	Check Measurement

Table 450.73-2: Department Acceptance of Tack Coat

Inspection Component	Inspection Attribute	Minimum Inspection Frequency	Point of Inspection	Inspection Method
Materials	Asphalt Emulsion (Correct Type)	1 per Day	At Paving Site	Check Manufacturer COC
Workmanship	Asphalt Emulsion Application Rate	Once per 5,000 lane-feet	Tacked Surface & Tack Distributor System	Visual Check & Check Measurement

B. Acceptance Inspection of HMA Lots.

The Department will perform Acceptance inspection at both the HMA production facility and at the site of HMA field placement. For purposes of Acceptance inspection, the total quantity of each HMA pavement course produced and placed during the same construction season will constitute a Lot. Each in-place HMA Lot will be divided into 500 lane-feet Sublots. The items to be inspected and minimum frequency of inspection will be in accordance with the requirements outlined in Table 450.73-3.

Wheel Path Deviations.

Each HMA Lot produced and placed will be inspected by the Engineer for Wheel Path Deviations (high points or low points) using a 10-ft standard straightedge in accordance with the procedures outlined in 450.64: Quality Control Inspection, Part B. Acceptance inspection for Wheel Path Deviations applies to all pavement courses (including Bridge Protective Courses and Bridge Surface Courses). The finished surface of each required pavement course will be inspected for all mainline travel lanes, auxiliary lanes, ramps, and side road travel lanes. The Sublot size and minimum frequency of Acceptance inspection for Wheel Path Deviations will be as specified in Table 450.73-3.

Table 450.73-3: Department Acceptance of HMA Lots

Inspection Component	Inspection Attribute	Minimum Inspection Frequency	Point of Inspection	Inspection Method
Materials	HMA Mixture Type, Aggregates & PG Binder (Correct Type)	1 per Day	HMA Production Facility	Visual Check & Manufacturer COC
	Joint Adhesive (Correct Type)	1 per Day	At Paving Site	Check Manufacturer COC
Workmanship	Joint Location & Alignment	50% of Sublots, Once per Joint	At Finished Joint	Visual Check
	Sawcut Joint Vertical Face	50% of Sublots, Once per Joint	Joint Vertical Face	Visual Check
	Joint Adhesive Application Rate	50% of Sublots, Once per Joint	Joint Vertical Face	Visual Check & Check Measurement
	Physical Segregation	50% of Sublots, Once per Joint	Compacted HMA	Visual Check
	Cross-Slope	50% of Sublots, Once per Joint	Compacted HMA	Check Measurement
	Joint Tightness	50% of Sublots, Once per Joint	Compacted HMA	Visual Check
	Joint Surface Deviations	50% of Sublots, Once per Joint	At Finished Joint	10-ft standard straightedge
	Wheel Path Deviations	50% of Sublots, per Wheel Path	Wheel Path	10-ft standard straightedge

450.74: Acceptance Sampling & Testing

A. Random Sampling.

The Department will utilize stratified random sampling to determine the overall quality of each HMA Lot produced and placed. Random Acceptance sample locations will be determined by the Engineer in accordance with ASTM D 3665 or by electronic random number generator, as presented by NETTCP. All random Acceptance sample locations will be documented on the most current version of MassDOT Test Report Form RMS100.

The Contractor shall furnish the Engineer with approved containers for all Acceptance samples. The Engineer will obtain all random Acceptance samples independent of the Contractor's QC samples at the frequencies outlined below.

(1) Sampling HMA Category A Lots.

The Engineer will obtain Acceptance samples from a minimum of 25% and a maximum of 100% of all Sublots in each HMA Category A Lot for all Quality Characteristics specified in Table 450.74-1, other than PG Asphalt Binder Grading and Ride Quality. Acceptance samples for PG Asphalt Binder Grading and Ride Quality will be obtained from each Sublot as defined in Table 450.74-1.

(2) Sampling HMA Category B Lots.

The Engineer will obtain Acceptance samples from a minimum of 50% and a maximum of 100% of all Sublots, but not less than 3 Sublots, in each HMA Category B Lot for all Quality Characteristics specified in Table 450.74-1, other than PG Asphalt Binder Grading and Ride Quality. Acceptance samples for PG Asphalt Binder Grading and Ride Quality will be obtained from each Sublot as defined in Table 450.74-1.

(3) Sampling HMA Category C Lots.

The Engineer will obtain Acceptance samples from 100% of all Sublots in each HMA Category C Lot for all Quality Characteristics specified in Table 450.74-1, other than Ride Quality. Acceptance sampling and testing for Ride Quality will not be performed on Category C Lots.

B. Selective Sampling.

The Department will utilize selective sampling (i.e. non-random samples) as needed to provide supplemental information to assist in quantifying the quality of apparent nonconforming material. The test results of selective Acceptance samples will not be combined with random Acceptance sample data in the determination of Lot acceptance using QLA as outlined in 450.78: Quality Level Analysis Procedures.

C. Contractor Assistance in Obtaining Acceptance Samples.

The Engineer will obtain all material samples for Acceptance testing by the Department. When requested by the Department, the Contractor shall assist the Engineer in obtaining Acceptance samples in accordance with the following requirements:

a) The Acceptance sample location and time will be randomly selected by the Engineer and provided to the Contractor immediately prior to sampling.
b) The Contractor's qualified QC personnel will only provide the physical labor to assist the Engineer in obtaining the Acceptance sample.
c) The Engineer will be present to direct and monitor the taking of the sample.
d) The Engineer will take immediate possession of the Acceptance sample.

Contractor assistance may be requested in obtaining Acceptance samples (random or selective) for PG Asphalt Binder Grading and for In-Place Density and Thickness (HMA cores). The Contractor shall provide adequate traffic control for the Department to obtain cores, regardless of whether the Contractor assists the Engineer in obtaining the Acceptance core samples.

D. Acceptance Sample Identification System.

The Department will use a standard system for the identification of all Acceptance samples. All PG Asphalt Binder samples, HMA loose mixture samples, and core samples will be labeled by the Engineer with the minimum information indicated under 450.65: Quality Control Sampling and Testing Requirements, Part C. Acceptance sampling data for Ride Quality and Wheel Path Deviations will be identified by the Engineer in accordance with the Department's Standard Operating Procedure CSD QA-6.

E. Retention of Split Samples.

Qualified Department personnel will obtain all material samples (PGAB samples, HMA loose mix samples, and cores) for Acceptance testing. The Department will retain Acceptance split samples from each PGAB sample and HMA loose mix sample and provide a split sample to the Contractor if requested. The Department will retain the original core samples after testing to serve as "split samples" and protect them from damage. All split samples will be stored by the Department for a period of 30 days, or until tested. These split samples will be utilized if necessary, in the Dispute Resolution process. The retained split samples may be discarded prior to the required 30 days when agreed upon by the Contractor and the Department.

F. Acceptance Testing of HMA Lots.

The Department will perform Acceptance testing using the random samples obtained in accordance with 450.74: Acceptance Sampling & Testing, Part A from the HMA production facility and at the site of HMA field placement. The specific Quality Characteristics subject to Department Acceptance testing are identified in Table 450.74-1. All Acceptance testing of HMA Lots will be performed by the Engineer in accordance with the AASHTO, ASTM, NETTCP, or Department test methods specified in Table 450.74-1 and the procedures outlined below. The Engineer will furnish a copy of all Department Acceptance test results/data to the Contractor within 5 days following completion of testing.

(1) PG Asphalt Binder Grading.

The Department will review the Supplier's Bill of Lading (BOL) submitted by the Contractor along with the Certificate of Compliance (COC) and Certificate of Analysis (COA) showing the corresponding certified test results for each Supplier Lot of PGAB from which the HMA Producer's PGAB was obtained. The Engineer will also obtain and test a minimum of one random Acceptance sample of PGAB for each 12,000-ton HMA Sublot, as defined in Table 450.74-1, to determine conformance with M3.01.0: Performance Graded Asphalt Binder. A minimum of one 1-qt container of PGAB will be obtained for each Acceptance sample from the HMA Producer plant in accordance with 450.30: General. All PGAB Acceptance samples will be split prior to testing and the un-tested portion of the sample will be retained for a minimum of 30 days.

(2) PG Asphalt Binder Content.

The Engineer will test each HMA Lot produced and placed for PG Asphalt Binder Content in accordance with either AASHTO T 308. The test results will be reported with all correction factors. The Sublot size and minimum frequency of Acceptance testing for PG Asphalt Binder Content will be as specified in Table 450.74-1. Each material sample for PG Asphalt Binder Content will be obtained at the HMA plant from a randomly selected quadrant from the haul vehicle in accordance with 450.65: Quality Control Sampling and Testing Requirements, Part A and AASHTO R 97 and R 47.

(3) Volumetrics (Air Voids).

The Engineer will test each HMA Lot produced and placed for Volumetrics (Air Voids) in accordance with AASHTO T 312 and R 35. The requirement for Volumetric testing of laboratory compacted specimens applies to HMA mixtures for all pavement courses, with the exception of OGFC. The Sublot size and minimum frequency of Acceptance testing for Volumetrics will be as

specified in Table 450.74-1. Each material sample for Volumetrics will be obtained at the HMA plant from a randomly selected quadrant from the haul vehicle in accordance with 450.65: Quality Control Sampling and Testing Requirements, Part A and AASHTO R 97 and R 47.

(4) Combined Aggregate Gradation.

Each HMA Lot produced and placed shall be tested for Combined Aggregate Gradation in accordance with AASHTO T 30. The Sublot size and minimum frequency of Acceptance testing for Combined Aggregate Gradation shall be as specified in Table 450.74-1. Each material sample for Combined Aggregate Gradation shall be obtained at the HMA plant from a randomly selected quadrant from the haul vehicle in accordance with 450.65: Quality Control Sampling and Testing Requirements, Part A and AASHTO R 97 and R 47.

If the Acceptance test results for an individual Sublot fall outside of the Action Limits specified in Table 450.65-3, the Engineer shall inform the Contractor so that they may evaluate the HMA production process and determine any adjustments necessary to bring the Combined Aggregate Gradation back within the Action Limits. If the subsequent Sublot test result falls outside of the Action Limits, the Contractor shall suspend Lot production until it can be demonstrated that the HMA mixture can be produced within the Action Limits.

Table 450.74-1: Department Acceptance Sampling and Testing of HMA Lots

Quality Characteristic	Test Method(s)	Sublot Size	Minimum Test Frequency	Point of Sampling	Sampling Method
PG Asphalt Binder Grading	Per M3.01.0: Performance Graded Asphalt Binder	12,000 tons of HMA using same PG Grade	1 per Sublot	From In-line Sample Valve at HMA Plant	Random AASHTO R 66
PG Asphalt Binder Content	AASHTO T 308	600 tons	1 per Sublot sampled per 450.74: Acceptance Sampling & Testing (See Note 1)	From Haul Vehicle at HMA Plant	Random AASHTO R 97 and R 47
Combined Aggregate Gradation	AASHTO T 30	600 tons	1 per Sublot sampled per 450.74: Acceptance Sampling & Testing (See Note 1)	From Haul Vehicle at HMA Plant	Random AASHTO R 97 and R 47
Volumetrics: Air Voids	AASHTO T 312 and R 35	600 tons	1 per Sublot sampled per 450.74: Acceptance Sampling & Testing (See Note 1)	From Haul Vehicle at HMA Plant	Random AASHTO R 97 and R 47
In-place HMA Mat Density (Cores)	AASHTO T 269	600 tons	1 per Sublot sampled per 450.74: Acceptance Sampling & Testing (See Note 1)	From Compacted HMA Course	Random AASHTO R 67
In-place HMA Mat Density (Bridge Courses)	AASHTO T 343 or T 355	150 tons	1 per Sublot sampled per 450.74: Acceptance Sampling & Testing (See Note 1)	From Compacted HMA Course	Random AASHTO T 343 or T 355
Thickness	ASTM D3549	600 tons	1 per Sublot sampled per 450.74: Acceptance Sampling & Testing (See Note 1)	From Compacted HMA Course	Random AASHTO R 67
Ride Quality (IRI)	AASHTO R 54 per 450.65: Quality Control Sampling and Testing Requirements, Part F(11)	0.1 miles per each Wheel Path	1 per Sublot	Each Pavement Course per 450.65: Quality Control Sampling and Testing Requirements, Part F(11)	Random per 450.65: Quality Control Sampling and Testing Requirements, Part F(11)
Note 1: In the event that the total daily HMA production is less than one Sublot but greater than 150 tons, a minimum of one random Acceptance sample shall be obtained for the day's production.					

(5) In-Place HMA Mat Density.

The Engineer will test each HMA Lot produced and placed for In-place HMA Mat Density. The requirement for In-Place Density testing applies to all pavement courses, with the exception of OGFC and Leveling Courses, as outlined below.

A. Testing In-Place Density by Cores.

Acceptance testing of HMA pavement courses (other than bridge courses) for In-place Density will be performed using cores in accordance with the procedures outlined in 450.65: Quality Control Sampling and Testing Requirements, Part F(8)(b). The Sublot size and minimum frequency of Acceptance testing for In-place Density of HMA pavement courses by core will be as specified in Table 450.74-1. In order to ensure that the correct maximum specific gravity is utilized to determine the In-Place Density of a core, the Engineer reserves the right to determine the maximum specific gravity of the core itself after its bulk specific gravity has been determined and verified.

B. Testing In-Place Density by Density Gauge.

Acceptance testing of all HMA Bridge Protective Courses and Bridge Surface Courses for In-place Density will be performed using a density gauge in accordance with the procedures outlined in 450.65: Quality Control Sampling and Testing Requirements, Part F(8)(a). The Sublot size and minimum frequency of Acceptance testing for In-place Density of HMA bridge courses by density gauge will be as specified in Table 450.74-1.

(6) Thickness.

Each HMA pavement course specified to be placed at a compacted thickness of 1 in. or greater, with the exception of the HMA pavement courses identified in 450.65: Quality Control Sampling and Testing Requirements, Part F(9), will be tested by the Engineer for Thickness using cores. Acceptance sampling and testing for Thickness of the applicable pavement courses shall be in accordance with AASHTO R 67 and ASTM D3549, respectively. The Sublot size and minimum frequency of Acceptance testing for Thickness will be as specified in Table 450.74-1.

If the mean thickness of the Lot is above the Upper Specification Limit, it may remain in place presuming that the final pavement elevation is within project requirements, but payment will be based upon the HMA tonnage calculated at the target thickness. If the mean thickness of the Lot is below the Lower Specification Limit, the Lot shall be rejected, and the Contractor will be required to submit a corrective action plan for review by the Engineer.

(7) Ride Quality.

Department Acceptance testing for Ride Quality will be required for all projects having a posted speed equal to or greater than 40 mph with HMA Lots falling under Lot Category A or Category B. The Engineer will perform Ride Quality testing on the final HMA pavement course placed (either Surface Course or OGFC, when specified) for all mainline travel lanes, auxiliary lanes, ramps, and side road travel lanes using an inertial profiler in accordance with the procedures outlined in 450.65: Quality Control Sampling and Testing Requirements, Part F(11). Pavement courses and surfaces that are specifically excluded from Acceptance testing for Ride Quality are as specified in 450.65: Quality Control Sampling and Testing Requirements, Part F(11)(b). The Sublot size and minimum frequency of Acceptance testing for Ride Quality will be as specified in Table 450.74-1.

The inertial profiler equipment used to perform Acceptance testing will be certified and correlated by the Department in accordance with the requirements and procedures outlined in 450.65: Quality Control Sampling and Testing Requirements, Part F(11). The Department Acceptance data and Contractor QC data will be correlated and normalized using statistical procedures. The

normalization of data will be based on the measurement difference/bias from the Department Reference Profiling Device determined during the device correlation conducted at MassDOT's designated Profiler Correlation Center. The Department will provide software and procedures to perform the data normalization. The normalized Acceptance Ride Quality data and QC Ride Quality data will be used to determine the quality level (PWL) and corresponding pay for each Lot.

450.75: Split Sample Correction

Split Sample Correlation is an important part of the Department Acceptance System for HMA Category A Lots and Category B Lots. Split Sample Correlation shall be performed when Validated Contractor QC test data is to be included in the acceptance determination. The purpose of Split Sample Correlation testing is to identify and eliminate any discrepancies in testing procedures or equipment that could result in significant differences between the Contractor's QC testing results and the Engineer's Acceptance testing results. The Engineer may waive the requirement for Split Sample Correlation if the following requirements are met:

a) The Contractor and the Department have successfully completed correlation on another project within the same calendar year in accordance with the Split Sample Correlation procedures below.
b) The Contractor's most recent Category A Lot(s) or Category B Lot(s) on the other project(s) during the same calendar year have a Quality Level of 90 PWL or better (for each Quality Characteristic).

Either prior to or on the first day of production and placement of any HMA Category A or B Lot, the Contractor and the Department will conduct Split Sample Correlation. The Engineer or the Contractor may also request that Split Sample Correlation be performed at any time during HMA Lot production and placement. Department IA personnel may also test a split of the Correlation samples.

Split Sample Correlation will be performed on split material samples for those Quality Characteristics identified in Table 450.75-1. Correlation samples for HMA mixture testing shall be either laboratory prepared specimens or plant produced HMA specimens. Samples for HMA Category A Lots may be obtained from the Control Strip Lot. The Contractor's QC personnel shall test one portion of the split sample using the equipment in their qualified QC laboratory. The Engineer shall test the other portion using the Department's equipment. Both parties shall not perform testing using the same equipment.

Correlation testing for In-place HMA Mat Density and Thickness shall be performed by both parties using the same sample. Correlation testing of the Contractor's QC ride quality testing equipment and the Department's Acceptance ride quality testing equipment will be performed in accordance with 450.65: Quality Control Sampling and Testing Requirements, Part F(11)(d).

Table 450.75-1: Split Sample Correlation Allowable Differences

Quality Characteristic	Test Method(s)	Allowable Difference Between Contractor and Department Split Samples (d2s)
PG Asphalt Binder Content	AASHTO T 308	± 0.35
Maximum Theoretical Specific Gravity (Gmm)	AASHTO T 209 (Method A)	± 0.020
Bulk Specific Gravity (Gmb)	AASHTO T 166 (Method A)	± 0.020
Volumetrics - Air Voids	AASHTO T 269	± 1.20
In-Place Mat Density (Cores)	AASHTO T 269	± 1.20
Thickness	ASTM D3549	± 0.125
Ride Quality (IRI)	AASHTO R 56	Per 450.65: Quality Control Sampling and Testing Requirements, Part F(11)(d)

If the Contractor's Split Sample Correlation results differ from the Department's results by more than the allowable differences specified in Table 450.75-1, then the Contractor and the Department shall determine and resolve the reasons for the differences prior to the start or continuation of HMA Lot production and placement.

450.76: Lot Acceptance Determination Based on Inspection Results

The Department's Acceptance Inspection results will be used in the final acceptance determination for all HMA Lots (Lot Category A, B, and C). Prior to final acceptance of each HMA Lot produced and placed, the Department will periodically evaluate all Acceptance inspection information for the prepared underlying surface and the Lot. The materials and product workmanship for the completed work will be evaluated for conformance with the plans and the requirements specified in 450.43: Preparation of Underlying Surface through 450.52: Opening to Traffic.

When the Acceptance information identifies deficiencies in either material quality or product workmanship for any underlying surface location or HMA Sublot(s), the location or Sublot(s) will be isolated and further evaluated by the Engineer through additional Acceptance inspection (or sampling and testing, if relevant or possible). Depending upon the findings of the additional Acceptance inspection activity, the Engineer will determine the disposition of the nonconforming work in accordance with Subsection 5.03: Conformity with Plans and Specifications.

After each HMA Lot (and corresponding prepared underlying surface) is complete, including any corrective action, the Engineer will evaluate all Acceptance inspection information for the Work. The Department will accept the subject Work if the Engineer's evaluation of all inspection information for the completed Lot (and underlying surface) indicates that the corresponding materials and product workmanship meet the specified requirements (provided the evaluation of all Acceptance testing data for the subject work per 450.77: Lot Acceptance Determination Based on Testing Data also finds the work to be acceptable).

450.77: Lot Acceptance Determination Based on Testing Data

A. Evaluation of Lot Category A Testing Data.

Prior to final acceptance of each HMA Category A Lot produced and placed, the Engineer will periodically evaluate all available Department Acceptance testing data for the Lot.

The Contractor's random QC testing data for each Lot will be included with the Department's random Acceptance testing data in the acceptance determination, provided that the QC data has been Validated in accordance with Part (1) below. The Department's Acceptance data and all Validated Contractor QC data will be evaluated using the Quality Limits specified in Tables 450.77-1, 450.77-2, or 450.77-3 ,and as further outlined below.

(1) Validation of Contractor QC Test Results.

Validation is defined as the mathematical comparison of two independently obtained sets of data to determine whether it can be assumed they came from the same Population. The Validation of each HMA Lot will be performed through a statistical comparison of the Engineer's random Acceptance testing data and the Contractor's random QC testing data for the Lot.

The statistical comparison of testing data will be made using the test result Variances (F-test) and the test result Means (t-test) at a significance level of 0.01 and in accordance with the procedures contained in AASHTO R 9. The Validation worksheet in the Department's QA Data Spreadsheets will be used to perform the Validation of each Lot.

If the Validation results indicate that the Contractor's QC test results and the Department's Acceptance test results can be assumed to be from the same Population, then the Contractor's QC test results will be included with the Department's Acceptance test results in the final acceptance determination for each Lot. If Validation results indicate that the Contractor's QC test results and the Department's Acceptance test results cannot be assumed to be from the same Population, then the Contractor's QC test results will be excluded from the final acceptance determination for the Lot and no incentive will be paid for any of the Quality Characteristics.

If the Validation results indicate that the Contractor's QC test results and the Department's Acceptance test results cannot be assumed to be from the same Population, then the Department will endeavor to determine the reason for the difference between the two data sets. If a reason for the difference cannot be determined, then only the Department's Acceptance test results will be used in the final acceptance determination for each Lot.

(2) Conformance with Engineering Limits.

The Engineer will evaluate all Department Acceptance testing data and Validated Contractor QC testing data for each Category A Lot to determine conformance with the Engineering Limits Tables 450.77-1, 450.77-2, or 450.77-3. Each Sublot test value for the Acceptance Quality Characteristics identified in Tables 450.77-1, 450.77-2, or 450.77-3 shall be within the Engineering Limits.

If a Sublot test result is outside of the Engineering Limits, the QC Manager and Engineer will further assess the Sublot quality to determine whether the material in the Sublot can remain in place as follows:

a) When it is possible to obtain additional samples, the Sublot will be isolated and divided into three equal Sublots. A random sample shall be obtained from each Sublot.
   i. If any of the additional samples are outside of the Engineering Limits the Sublot will be rejected and the Contractor will be required to submit a corrective action plan for review by the Engineer.
   ii. If all 3 samples are within Engineering Limits then the average of the original value along with the three additional values will be determined.
      (a) If the average of the 4 results is found to be within the Engineering Limits, the Sublot will be considered acceptable and the average of all four values will replace the original value in the QLA for the Sublot.
      (b) If the average of the 4 results is found to not be within the Engineering Limits, the Sublot will be considered rejected and the Contractor will be required to submit a corrective action plan for review by the Engineer.
b) If it is not possible to obtain additional samples, the Engineer will determine the disposition of the Sublot in accordance with Subsection 5.03: Conformity with Plans and Specifications. If the Engineer's assessment determines that the material quality is sufficient to permit the Sublot to remain in place without corrective action, the Engineer shall request a credit for that Sublot. In addition, the original out of Engineering Limits test result will be included in the QLA for the Lot in accordance with 450.77: Lot Acceptance Determination Based on Testing Data, Part A(3) below.

If the Engineer's assessment determines that the material quality is not sufficient to permit the Sublot to remain in place the Sublot shall be removed and replaced. When a nonconforming Sublot is corrected or replaced, the Engineer will perform Acceptance testing of the Sublot and evaluate the test results for conformance with the Engineering Limits. The Acceptance test data for the corrected Sublot will replace the original Acceptance test result and will be included in the QLA for the Lot in accordance with Part (3) below. Once the above requirements have been met, the Department will accept all completed Sublots, provided that the overall Lot quality is above the Acceptance Limit as further outlined below.

(3) Analysis of Lot Quality Level.

For each HMA Category A Lot, the Engineer will determine the Lot Quality Level, for the applicable Quality Characteristics in Tables 450.77-1, 450.77-2, or 450.77-3, using the QLA procedures outlined in 450.78: Quality Level Analysis Procedures. The QLA procedure will evaluate all Department Acceptance testing data and Validated Contractor QC testing data using the applicable Specification Limits in Tables 450.77-1, 450.77-2, or 450.77-3. The Department's QA Data Spreadsheets will be used to perform the QLA for each Lot.

All random test results that are within the Engineering Limits will be included in the QLA. Individual Sublot test results that are beyond the Engineering Limits, but for which the corresponding Sublot is permitted to remain in place per Part (2) above, will also be included in the QLA.

The QLA procedure will determine the Percent Within Limits (PWL) for each Lot. The Acceptance Limit (Rejectable Quality Level) for each completed Lot is 60 PWL. Each Lot must achieve a final Quality Level of at least 60 PWL in order to be accepted by the Department. The payment for the Lot will be as follows:

a) If the final computed Lot Quality Level for each of the applicable Quality Characteristics in Tables 450.77-1, 450.77-2, or 450.77-3 is at 90 PWL, the Contractor will receive full payment at the unit bid price for the Lot.
b) If the Lot Quality Level for an individual Quality Characteristic is greater than 90 PWL, the Contractor will receive an incentive pay adjustment for the Lot in accordance with 450.92: Pay Adjustment.
c) If the Lot Quality Level for an individual Quality Characteristic is less than 90 PWL but greater than or equal to 60 PWL, the Contractor will receive a disincentive pay adjustment for the Lot.
d) If the Lot Quality Level for any Quality Characteristic in Tables 450.77-1, 450.77-2, or 450.77-3 is below 80 PWL, the Contractor will receive no incentive pay adjustments for any Quality Characteristics with a PWL over 90. The Contractor, however, will receive any disincentive pay adjustments for the Lot.
e) If the final computed Lot Quality Level for an individual Quality Characteristic is below 60 PWL, the Lot will not be accepted. Payment for the Lot will be withheld, and the Contractor shall submit a corrective action plan within 14 days following determination of the Lot PWL. The Engineer will review the corrective action plan and render a decision within 14 days of receipt of the corrective action plan. If the Engineer determines that the Lot or some of the Sublots cannot remain in place, the Contractor shall remove and replace the affected Lot or Sublots. If the Engineer allows the Lot to remain in place, payment will be limited to a maximum of 75% of the bid price for the item.

(4) Final Lot Acceptance Determination.

After each HMA Category A Lot is complete, including any corrective action, the Engineer will perform a final evaluation of all Department Acceptance data and Validated Contractor QC data for the Lot. The Department will accept the subject Lot if the Engineer's evaluation of all testing data for the Lot is in conformance with the applicable Quality Limits as outlined in 450.77: Lot Acceptance Determination Based on Testing Data, Part A(2) and Part A(3) above.

Table 450.77-1: Quality Limits for Acceptance of HMA Lots

Quality Characteristic	Target	Specification Limits		Engineering Limits		Acceptance Limit
		LSL	USL	LEL	UEL	
PG Asphalt Binder Grading	Per Binder Grade specified	N/A	N/A	Per M3.01.0: Performance Graded Asphalt Binder		N/A
PG Asphalt Binder Content	Per JMF	Target – 0.3%	Target + 0.3%	Target – 0.4%	Target + 0.4%	60 PWL
Volumetrics: Air Voids	4%	2.7%	5.3%	2%	6%	60 PWL
In-Place HMA Mat Density (Cores)	95% of G_{mm}	92.5% of G_{mm}	97.5% of G_{mm}	91.5% of G_{mm}	98.5% of G_{mm}	60 PWL
In-Place HMA Mat Density (Bridge Courses)	95% of G_{mm}	N/A	N/A	90% of G_{mm}	N/A	N/A
Thickness: (All Courses 1 in. or greater)	Per Plans	-20% of Target Thickness	+20% of Target Thickness	-30% of Target Thickness	+30% of Target Thickness	60 PWL
Ride Quality: Posted Speed Limit ≥55 mph (See Note 1)	50 in./mi	N/A	70 in./mi	N/A	80 in./mi	60 PWL
Ride Quality: Posted Speed Limit ≥40 but <55 mph (See Note 1)	70 in./mi	N/A	100 in./mi	N/A	110 in./mi	60 PWL
Ride Quality: Posted Speed Limit <40 mph	Not subject to Ride Quality Testing					

Note 1: Projects with posted speed limits that fall into more than one of the Posted Speed Limit ranges above will be divided into multiple Lots and evaluated separately.

Table 450.77-2: Quality Limits for Acceptance of ARGG Lots

Quality Characteristic	Target	Specification Limits		Engineering Limits		Acceptance Limit
		LSL	USL	LEL	UEL	
PG Asphalt Binder Grading	Per Binder Grade specified	N/A	N/A	Per M3.01.0	Per M3.01.0	N/A
PG Asphalt Binder Content	Per JMF	Target – 0.4%	Target + 0.4%	Target – 0.6%	Target + 0.6%	60 PWL
Volumetrics: Air Voids	Per JMF	Target – 1.3%	Target + 1.3%	Target – 2.0%	Target + 2.0%	For Information Only
In-Place HMA Mat Density (Cores)	95% of G_{mm}	92.5% of G_{mm}	97.5% of G_{mm}	91.5% of G_{mm}	98.5% of G_{mm}	60 PWL
In-Place HMA Mat Density (Bridge Courses)	95% of G_{mm}	N/A	N/A	90% of G_{mm}	N/A	N/A
Thickness: (All Courses 1 in. or greater)	Per Plans	-20% of Target Thickness	+20% of Target Thickness	-30% of Target Thickness	+30% of Target Thickness	60 PWL
Ride Quality: Posted Speed Limit ≥55 mph (See Note 1)	50 in./mi	N/A	70 in./mi	N/A	80 in./mi	60 PWL
Ride Quality: Posted Speed Limit ≥40 but <55 mph (See Note 1)	70 in./mi	N/A	100 in./mi	N/A	110 in./mi	60 PWL
Ride Quality: Posted Speed Limit <40 mph	Not subject to Ride Quality Testing					

Note 1: Projects with posted speed limits that fall into more than one of the Posted Speed Limit ranges above will be divided into multiple Lots and evaluated separately.

Table 450.77-3: Quality Limits for Acceptance of OGFC Lots

Quality Characteristic	Target	Specification Limits LSL	Specification Limits USL	Engineering Limits LEL	Engineering Limits UEL	Acceptance Limit
PG Asphalt Binder Grading	Per Binder Grade specified	N/A	N/A	Per M3.01.0	Per M3.01.0	N/A
PG Asphalt Binder Content (OGFC-P)	Per JMF	Target – 0.3%	Target + 0.3%	Target – 0.4%	Target + 0.4%	60 PWL
PG Asphalt Binder Content (OGFC-AR)	Per JMF	Target – 0.4%	Target + 0.4%	Target – 0.6%	Target + 0.6%	60 PWL
Volumetrics: Air Voids	Per JMF	Target – 2%	Target + 2%	Target – 3%	Target + 3%	For Information Only
Ride Quality: Posted Speed Limit ≥55 mph (See Note 1)	50 in./mi	N/A	70 in./mi	N/A	80 in./mi	60 PWL
Ride Quality: Posted Speed Limit ≥40 but <55 mph (See Note 1)	70 in./mi	N/A	100 in./mi	N/A	110 in./mi	60 PWL
Ride Quality: Posted Speed Limit <40 mph	Not subject to Ride Quality Testing					
Note 1: Projects with posted speed limits that fall into more than one of the Posted Speed Limit ranges above will be divided into multiple Lots and evaluated separately.						

B. Evaluation of Lot Category B Testing Data.

Prior to final acceptance of each HMA Category B Lot produced and placed, the Engineer will periodically evaluate all available Department Acceptance testing data for the Lot.

The Contractor's random QC testing data for each Lot will be included with the Department's random Acceptance testing data in the acceptance determination, provided that the QC data has been Validated. The Department's Acceptance data and all Validated Contractor QC data will be evaluated for conformance with Engineering Limits and for Lot Quality Level in accordance with the requirements of 450.77: Lot Acceptance Determination Based on Testing Data, Part A above using the applicable Quality Limits specified in Tables 450.77-1, 450.77-2, or 450.77-3.

After each HMA Category B Lot is complete, including any corrective action, the Engineer will perform a final evaluation of all Department Acceptance data and Validated Contractor QC data for the Lot. The Department will accept the subject Lot if the Engineer's evaluation of all testing data for the Lot is in conformance with the applicable Quality Limits.

C. Evaluation of Lot Category C Testing Data.

For each HMA Category C Lot produced and placed, the Engineer will evaluate all Department Acceptance testing data for the Lot entered into the Department's QA Data Spreadsheets after all HMA Sublots are complete in-place. The Contractor's random QC testing data for each Lot will not be included with the Department's random Acceptance testing data in the Acceptance

determination. Work under HMA Lot Category C will not be subject to an evaluation of Lot Quality Level using QLA procedures.

The individual Sublot test results for each HMA Category C Lot will be evaluated against the applicable Specification Limits contained in Tables 450.77-1, 450.77-2, or 450.77-3 (Note: the Engineering Limits are not applied since the inherent variability for Minor Lot quantities is expected to be within the Specification Limits). For Sublots which are outside of the Specification Limits a credit shall be calculated using the following formula:

When below LSL: $Disincentive\ Value\ = (LSL\ -\ x_i) \times 0.05 \times Q \times P$
When above USL: $Disincentive\ Value\ = (x_i - USL) \times 0.05 \times Q \times P$

Where: $LSL =\ Lower\ Specification\ Limit\ for\ the\ particular\ Quality\ Characteristic$
$USL\ =\ Upper\ Specification\ Limit\ for\ the\ particular\ Quality\ Characteristic$
$x_i\ =\ Individual\ Sublot\ test\ result$
$Q\ =\ Sublot\ quantity$
$P\ =\ Item\ bid\ price\ per\ ton$

If a Sublot test result is outside of the Engineering Limits, the Engineer will further assess the Sublot quality in accordance with the requirements of 450.77: Lot Acceptance Determination Based on Testing Data, Part A(2). The Engineer will determine the disposition of the Sublot in accordance with Subsection 5.03: Conformity with Plans and Specifications.

After each HMA Category C Lot is complete, including any corrective action, the Engineer will perform a final evaluation of all Department Acceptance data. The Department will accept the subject Lot if the Engineer's evaluation of the testing data for each Sublot is in conformance with the Engineering Limits.

450.78: Quality Level Analysis Procedures

For each Quality Characteristic subject to analysis of Lot Quality Level, QLA will be used to determine the percentage of the Lot that is within the Specification Limits. The number of significant figures retained in each step of the QLA calculations and the rounding of all reported values will be as established in the Department's QA Data Spreadsheets. The estimated percentage of work that is within the Specification Limits for a given Lot will be determined as follows:

A. Step 1 – Determine Lot Mean.

The Mean (X) will be determined for each Lot using all random Department Acceptance sample test values and all random Contractor QC sample test values (provided they have been Validated). The Mean is calculated using the following equation:

$$X = \frac{\sum x}{n}$$

Where: $\sum = summation\ of$
$x = individual\ test\ value\ of\ each\ material\ sample$
$n = total\ number\ of\ material\ samples\ tested$

B. Step 2 – Determine Lot Standard Deviation.

The Standard Deviation (s) will be determined for each Lot using all random Department Acceptance sample test values and all random Contractor QC sample test values (provided they have been Validated). The Standard Deviation is calculated using the following equation:

$$s = \sqrt{\frac{n\sum(x^2) - (\sum x)^2}{n(n-1)}}$$

Where: $\sum(x^2) = summation\ of\ the\ squares\ of\ individual\ test\ values$
$(\sum x)^2 = summation\ of\ the\ individual\ test\ values\ squared$

C. Step 3 – Determine Upper Quality Index for Lot.

The Upper Quality Index (Q_u) will be determined for each Lot using the Lot Mean and Lot Standard Deviation calculated in Step 1 and Step 2 above. The Upper Quality Index is calculated using the following equation:

$$Q_u = \frac{USL - X}{s}$$

Where: $USL = Upper\ Specification\ Limit\ from$ Tables 450.77-1, 450.77-2, or 450.77-3
$X = Lot\ Mean$
$s = Lot\ Standard\ Deviation$

D. Step 4 – Determine Lower Quality Index for Lot.

The Lower Quality Index (Q_L) will be determined for each Lot using the Lot Mean and Lot Standard Deviation calculated in Step 1 and Step 2 above. The Lower Quality Index is calculated using the following equation:

$$Q_L = \frac{X - LSL}{s}$$

Where: $LSL = Lower\ Specification\ Limit\ from$ Tables 450.77-1, 450.77-2, or 450.77-3
$X = Lot\ Mean$
$s = Lot\ Standard\ Deviation$

E. Step 5 – Determine Percentage of Lot Below Upper Specification Limit.

The estimated percentage of the Lot falling below the Upper Specification Limit (P_U) will be determined using Table 450.78-1. The P_U value is determined from the table by entering the column for the number of material samples (n) representing the Lot and locating the row that corresponds to the Q_u value determined in Step 3 above. If no USL is specified in Table 450.78-1, the P_U value is equal to 100.

F. Step 6 – Determine Percentage of Lot Above Lower Specification Limit.

The estimated percentage of the Lot falling above the Lower Specification Limit (P_L) will be determined using Table 450.78-1. The P_L value is determined from the table by entering the column for the number of material samples (n) representing the Lot and locating the row that corresponds

to the Q_L value determined in Step 4 above. If no LSL is specified in Table 450.78-1, the P_L value is equal to 100.

G. Step 7 – Determine Estimated PWL for Lot.

The Lot Quality Level will be determined by estimating the PWL. The PWL is determined using the P_U value from Step 5 and the P_L value from Step 6 above. The PWL is calculated using the following equation:

$$PWL = (P_U + P_L) - 100$$

Table 450.78-1: Values for Estimating Percent of Lot Within Specification Limits

P_u or P_l (%)[1]	Upper Quality Index (Q_U) or Lower Quality Index (Q_L)														
	n=3	n=4	n=5	n=6	n=7	n=8	n=9	n=10 to n=11	n=12 to n=14	n=15 to n=18	n=19 to n=25	n=26 to n=37	n=38 to n=69	n≥ 70, ≤200	n≥ 201
100	1.16	1.50	1.79	2.03	2.23	2.39	2.53	2.65	2.83	3.03	3.20	3.38	3.54	3.70	3.83
99		1.47	1.67	1.80	1.89	1.95	2.00	2.04	2.09	2.14	2.18	2.22	2.26	2.29	2.31
98	1.15	1.44	1.60	1.70	1.76	1.81	1.84	1.86	1.91	1.93	1.96	1.99	2.01	2.03	2.05
97		1.41	1.54	1.62	1.67	1.70	1.72	1.74	1.77	1.79	1.81	1.83	1.85	1.86	1.87
96	1.14	1.38	1.49	1.55	1.59	1.61	1.63	1.65	1.67	1.68	1.70	1.71	1.73	1.74	1.75
95		1.35	1.44	1.49	1.52	1.54	1.55	1.56	1.58	1.59	1.61	1.62	1.63	1.63	1.64
94	1.13	1.32	1.39	1.43	1.46	1.47	1.48	1.49	1.50	1.51	1.52	1.53	1.54	1.55	1.55
93		1.29	1.35	1.38	1.40	1.41	1.42	1.43	1.44	1.44	1.45	1.46	1.46	1.47	1.47
92	1.12	1.26	1.31	1.33	1.35	1.36	1.36	1.37	1.37	1.38	1.39	1.39	1.40	1.40	1.40
91	1.11	1.23	1.27	1.29	1.30	1.30	1.31	1.31	1.32	1.32	1.33	1.33	1.33	1.34	1.34
90	1.10	1.20	1.23	1.24	1.25	1.25	1.26	1.26	1.26	1.27	1.27	1.27	1.28	1.28	1.28
89	1.09	1.17	1.19	1.20	1.20	1.21	1.21	1.21	1.21	1.22	1.22	1.22	1.22	1.22	1.23
88	1.07	1.14	1.15	1.16	1.16	1.16	1.17	1.17	1.17	1.17	1.17	1.17	1.17	1.17	1.17
87	1.06	1.11	1.12	1.12	1.12	1.12	1.12	1.12	1.12	1.12	1.12	1.12	1.12	1.13	1.13
86	1.04	1.08	1.08	1.08	1.08	1.08	1.08	1.08	1.08	1.08	1.08	1.08	1.08	1.08	1.08
85	1.03	1.05	1.05	1.04	1.04	1.04	1.04	1.04	1.04	1.04	1.04	1.04	1.04	1.04	1.04
84	1.01	1.02	1.01	1.01	1.00	1.00	1.00	1.00	1.00	1.00	1.00	1.00	0.99	0.99	0.99
83	1.00	0.99	0.98	0.97	0.97	0.96	0.96	0.96	0.96	0.96	0.96	0.96	0.95	0.95	0.95
82	0.97	0.96	0.95	0.94	0.93	0.93	0.93	0.92	0.92	0.92	0.92	0.92	0.92	0.92	0.92
81	0.96	0.93	0.91	0.90	0.90	0.89	0.89	0.89	0.89	0.88	0.88	0.88	0.88	0.88	0.88
80	0.93	0.90	0.88	0.87	0.86	0.86	0.86	0.85	0.85	0.85	0.85	0.84	0.84	0.84	0.84
79	0.91	0.87	0.85	0.84	0.83	0.82	0.82	0.82	0.82	0.81	0.81	0.81	0.81	0.81	0.81
78	0.89	0.84	0.82	0.80	0.80	0.79	0.79	0.79	0.78	0.78	0.78	0.78	0.77	0.77	0.77
77	0.87	0.81	0.78	0.77	0.76	0.76	0.76	0.75	0.75	0.75	0.75	0.74	0.74	0.74	0.74
76	0.84	0.78	0.75	0.74	0.73	0.73	0.72	0.72	0.72	0.71	0.71	0.71	0.71	0.71	0.71
75	0.82	0.75	0.72	0.71	0.70	0.70	0.69	0.69	0.69	0.68	0.68	0.68	0.68	0.68	0.67
74	0.79	0.72	0.69	0.68	0.67	0.66	0.66	0.66	0.66	0.65	0.65	0.65	0.65	0.64	0.64
73	0.76	0.69	0.66	0.65	0.64	0.63	0.63	0.63	0.62	0.62	0.62	0.62	0.62	0.61	0.61
72	0.74	0.66	0.63	0.62	0.61	0.60	0.60	0.60	0.59	0.59	0.59	0.59	0.59	0.58	0.58
71	0.71	0.63	0.60	0.59	0.58	0.57	0.57	0.57	0.57	0.56	0.56	0.56	0.56	0.55	0.55
70	0.68	0.60	0.57	0.56	0.55	0.55	0.54	0.54	0.54	0.53	0.53	0.53	0.53	0.53	0.52
69	0.65	0.57	0.54	0.53	0.52	0.52	0.51	0.51	0.51	0.50	0.50	0.50	0.50	0.50	0.50
68	0.62	0.54	0.51	0.50	0.49	0.49	0.48	0.48	0.48	0.48	0.47	0.47	0.47	0.47	0.47
67	0.59	0.51	0.47	0.47	0.46	0.46	0.46	0.45	0.45	0.45	0.45	0.44	0.44	0.44	0.44
66	0.56	0.48	0.45	0.44	0.44	0.43	0.43	0.43	0.42	0.42	0.42	0.42	0.41	0.41	0.41
65	0.52	0.45	0.43	0.41	0.41	0.40	0.40	0.40	0.40	0.39	0.39	0.39	0.39	0.39	0.39
64	0.49	0.42	0.40	0.39	0.38	0.38	0.37	0.37	0.37	0.37	0.36	0.36	0.36	0.36	0.36
63	0.46	0.39	0.37	0.36	0.35	0.35	0.35	0.34	0.34	0.34	0.34	0.34	0.33	0.33	0.33
62	0.43	0.36	0.34	0.33	0.32	0.32	0.32	0.32	0.31	0.31	0.31	0.31	0.31	0.31	0.31
61	0.39	0.33	0.31	0.30	0.30	0.29	0.29	0.29	0.29	0.29	0.28	0.28	0.28	0.28	0.28
60	0.36	0.30	0.28	0.27	0.27	0.27	0.26	0.26	0.26	0.26	0.26	0.26	0.26	0.25	0.25
59	0.32	0.27	0.25	0.25	0.24	0.24	0.24	0.24	0.23	0.23	0.23	0.23	0.23	0.23	0.23
58	0.29	0.24	0.23	0.22	0.21	0.21	0.21	0.21	0.21	0.21	0.20	0.20	0.20	0.20	0.20
57	0.25	0.21	0.20	0.19	0.19	0.19	0.18	0.18	0.18	0.18	0.18	0.18	0.18	0.18	0.18
56	0.22	0.18	0.17	0.16	0.16	0.16	0.16	0.16	0.16	0.15	0.15	0.15	0.15	0.15	0.15
55	0.18	0.15	0.14	0.13	0.13	0.13	0.13	0.13	0.13	0.13	0.13	0.13	0.13	0.13	0.13
54	0.14	0.12	0.11	0.11	0.11	0.10	0.10	0.10	0.10	0.10	0.10	0.10	0.10	0.10	0.10
53	0.11	0.09	0.08	0.08	0.08	0.08	0.08	0.08	0.08	0.08	0.08	0.08	0.08	0.08	0.08
52	0.07	0.06	0.06	0.05	0.05	0.05	0.05	0.05	0.05	0.05	0.05	0.05	0.05	0.05	0.05
51	0.04	0.03	0.03	0.03	0.03	0.03	0.03	0.03	0.03	0.03	0.03	0.03	0.03	0.03	0.02
50	0.00	0.00	0.00	0.00	0.00	0.00	0.00	0.00	0.00	0.00	0.00	0.00	0.00	0.00	0.00

If the calculated value of Q_U or Q_L does not correspond exactly to a value in the table, use the next higher value.
If Q_U or Q_L are negative values, P_U or P_L is equal to 100 minus the table value for P_U or P_L.
[1] P_U or P_L = PWL for positive values of Q_U or Q_L.

DISPUTE RESOLUTION

450.80: Disputable Items

The Contractor or the Department may dispute any of the test values that are utilized in the acceptance determination for a given Lot. The specific Quality Characteristics which may be disputed are as listed in Table 450.84-1 below. All disputes shall be initiated within the 30-day split sample retention time limit as specified in 450.82: Dispute Resolution Samples below.

450.81: Basis for Dispute

Differences from one individual Contractor QC test value to another (or from one individual Department Acceptance test value to another) within a Lot are expected due to inherent variability. Differences are also expected between the QC test values and the Acceptance values for a given Lot as a result of inherent variability. An individual QC test value cannot be directly compared to an individual Acceptance test value since the samples are randomly obtained independent of one another. However, if one or more of either the Contractor's random QC test values or Department's random Acceptance test values for a Lot significantly differs from the rest of the test values for the same Lot, either party may dispute the validity of an individual test value.

450.82: Dispute Resolution Samples

Samples used for Dispute Resolution testing shall be the split samples required to be retained for 30 days by the Contractor and the Department in accordance with 450.65: Quality Control Sampling and Testing Requirements, Part D and 450.74: Acceptance Sampling & Testing, Part E. Original cores are to be retained and shall be protected from damage. If In-place density or thickness is disputed, then the original core, unless damaged, will be used in the Dispute Resolution process. If the original disputed core is damaged, then a new core shall be obtained from within a 2-ft radius of the location of the original core by the party whose data is being disputed in the presence of the other party. If ride quality smoothness test data is disputed, then the disputed Sublot(s) shall be re-sampled/retested by the party whose data is being disputed in the presence of the other party.

450.83: Dispute Resolution Process

The Contractor may dispute the Department's Acceptance results and the Department may dispute the Contractor's QC results by requesting that the dispute resolution split sample be tested. Such a request, either from the Contractor or the Department, must be made in writing within 5 days after the original sample was tested. The following shall be provided in the written request:

a) Sample reference number, including Lot and Sublot.
b) The specific Quality Characteristic and test result(s) being disputed.
c) The complete NETTCP TRF containing the disputed results.

RMS shall act as the Arbitrator in all disputes related to the specific Quality Characteristics listed in Table 450.84-1. Once RMS receives the written request, they shall review the dispute and determine the Final Disposition. RMS will perform Dispute Resolution testing or evaluation to resolve the dispute. RMS's decision will be final. RMS will determine which of the following steps will be completed as part of the Dispute Resolution Process.

A. Step 1 – Split Sample Correlation.

Immediately prior to conducting testing for Dispute Resolution, the Contractor's QC testing personnel, the Department's Acceptance testing personnel (from the District), and a Department Independent Assurance technician will conduct Split Sample Correlation testing as detailed in 450.75: Split Sample Correction. Split Sample Correlation testing will be conducted on a separate material sample obtained independent from the original sample and the Dispute Resolution sample.

The purpose of the Split Sample Correlation testing is to determine if testing procedures or equipment utilized by the Contractor or the Department might be the cause of the disputed result(s).

B. Step 2 – Dispute Resolution Sample Testing.

RMS will test the Dispute Resolution split sample obtained per 450.82: Dispute Resolution Samples. Testing of the Dispute Resolution split sample shall be performed in the presence of both the Contractor and the Department.

C. Step 3 – Additional Dispute Resolution Testing.

If either the Contractor or the Department believes that the results of the Dispute Resolution split sample testing in Step 2 above do not conclusively resolve the dispute, additional sampling and testing within the disputed Sublot may be requested. In such case, RMS will obtain and test three random samples from the disputed Sublot. The Mean of the three test results will be used as the Dispute Resolution test value.

450.84: Final Disposition

If the difference between the original test value and the Dispute Resolution test value (as determined under either Step 2 or Step 3 above) is within the maximum test difference values listed in Table 450.84-1, then the original test value will be used in the Acceptance determination for the Lot. If the difference between the original test value and the Dispute Resolution test value exceeds the maximum difference values in Table 450.84-1, then the Dispute Resolution test value will be used in the Acceptance determination. In such case, the record of the original test value will be retained (with notation of the outcome of Dispute Resolution); however, it will not be used in calculating the Lot quality level.

Table 450.84-1: Dispute Resolution Maximum Test Difference Values

Quality Characteristic	Test Method(s)	Maximum Test Difference (d2s)
PG Asphalt Binder Content	AASHTO T 308	±0.35
Maximum Theoretical Specific Gravity (G_{mm})	AASHTO T 209 (Method A)	±0.020
Bulk Specific Gravity (G_{mb})	AASHTO T 166 (Method A)	±0.020
Volumetrics - Air Voids	AASHTO T 269	±1.20
In-Place Mat Density (Cores)	AASHTO T 269	±1.20
Thickness	ASTM D3549	±0.125
Ride Quality (IRI)	AASHTO R 56	Per 450.65: Quality Control Sampling and Testing Requirements, Part F(11)(d)

COMPENSATION

450.90: Method of Measurement

A. Patching.

HMA for Patching will be measured for payment by the ton and shall be the actual quantity complete, in place and accepted by the Engineer.

B. Tack Coat.

Asphalt Emulsion for Tack Coat, as required by the plans or these specifications, will be measured by the gallon.

C. Joint Adhesive.

HMA Joint Adhesive used for adhering all longitudinal joints and transverse joints in HMA pavement courses will be measured by the foot.

D. Hot Mix Asphalt.

Hot Mix Asphalt pavement course mixtures will be measured by the ton and shall be the actual pavement course quantity complete, in place, and accepted by the Engineer. The quantity shall be determined only by weight slips that have been properly countersigned by the Engineer at the time of delivery.

When it is determined that the mean thickness of the pavement is not in conformance with the specification limit thicknesses, as specified under 450.74: Acceptance Sampling & Testing, Part F(6), the quantity shall be determined based on the actual pavement course quantity complete, in place, at the target thickness specified on the plans and accepted by the Engineer. Material quantity above the target thickness shall not be considered for payment.

450.91: Basis of Payment

A. Patching.

HMA for Patching will be paid for at the contract unit price per ton of the HMA mixture type specified under Pay Item 451. Payment shall include all sawcutting, removal of existing distressed or unsound pavement, applying hot applied pavement joint adhesive to vertical faces, applying the tack coat to all required surfaces at the specified rate in accordance with 450.43: Preparation of Underlying Surface, Part G, and transportation, delivery, placement, and compaction of HMA for Patching in accordance with 450.43: Preparation of Underlying Surface, Part C.

B. Tack Coat.

Asphalt Emulsion for Tack Coat will be paid for at the contract unit price per gallon of applied tack coat under Pay Item 452. Payment shall include sweeping existing surfaces and applying the tack coat to all required surfaces at the specified rate in accordance with 450.43: Preparation of Underlying Surface, Part G.

C. Joint Adhesive.

HMA Joint Adhesive will be paid for at the contract unit price per foot of joint sealed under Pay Item 453. Payment shall include application of the joint adhesive to all longitudinal joints and transverse joints in HMA pavement courses as required and in accordance with 450.49: Hot Mix Asphalt Joints.

D. Hot Mix Asphalt.

Each HMA pavement course will be paid for at the contract unit price per ton of in-place mixture under the HMA Pay Items specified (Pay Items 450.10 through 450.70). Payment shall include sweeping the underlying surface, transportation, delivery, placement (including providing an MTV, when required), and compaction of each HMA pavement course in accordance with 450.43: Preparation of Underlying Surface through 450.52: Opening to Traffic. Mobile lighting for nighttime milling and paving, in accordance with 450.47: Hot Mix Asphalt Placement, Part C, is considered incidental to the cost of each HMA pavement course placed.

All sawcutting required for transverse joints or longitudinal joints in accordance with 450.49: Hot Mix Asphalt Joints shall also be included in the contract unit price for each HMA pavement course. All required sawcutting in the existing pavement in accordance with this specification will be included in the contract unit price for each HMA pavement course, except sawcutting pavement for box widening, which will be paid under Item 482.5.

E. Contractor Quality Control.

The Contractor's QC System will be considered incidental to the work and shall be included in the Contract unit price for each HMA pavement course. No separate payment will be made for any assistance provided by the Contractor to the Engineer in obtaining Department Acceptance samples. Failure of the Contractor to perform adequate Quality Control in accordance with the specifications and the Contractor’s approved QC Plan will be justification for withholding payment.

450.92: Pay Adjustment

Payment for each HMA Category A Lot and Category B Lot will be determined based on the final Lot Quality Level (PWL) computed in accordance with the QLA procedures contained 450.78: Quality

Level Analysis Procedures. Pay adjustments will be determined for each of the Acceptance Quality Characteristics identified in Table 450.92-1. The relative pay adjustment weight assigned to each of the HMA Quality Characteristics is indicated in Table 450.92-1.

Table 450.92-1: Pay Adjustment Weight Assigned to HMA Quality Characteristics

HMA Quality Characteristics	Pay Adjustment Weight
PG Asphalt Binder Content	10%
Volumetrics - Air Voids	15%
In-Place HMA Mat Density	35%
Thickness	10%
Ride Quality (IRI)	30%

A. Lot Pay Factor.

A Pay Factor (PF) will be determined for each HMA Lot using the Quality Level (PWL) computed for the Lot and the equation below:

$$PayFactor(PF) = \frac{55 + 0.5(QualityLevel)}{100}$$

The Lot Pay Factor will be used to determine the pay adjustment for each Quality Characteristic as further outlined below.

B. Pay Adjustment for PG Asphalt Binder Content.

Pay adjustment for PG Asphalt Binder Content shall be applied to Pay Item 999.490 at the completion of the HMA Lot. The total Lot pay adjustment for PG Asphalt Binder Content will be determined as follows:

$$PA_{PGAB} = \sum (PF_i - 1)(Q_i)(P_i)(PAW_{PGAB})$$

Where: $PA_{PGAB} = Pay\ adjustment\ in\ dollars\ for\ PG\ Asphalt\ Binder\ Content$
$PF_i = Pay\ factor\ based\ on\ Quality\ Level\ (PWL)\ of\ PG\ Asphalt\ Binder\ Content\ for\ individual\ Lot\ (i)$
$Q_i = Quantity\ represented\ by\ individual\ Lot\ (i), in\ tons$
$P_i = Contract\ unit\ price\ per\ ton\ for\ individual\ Lot\ (i)$
$PAW_{PGAB} = Weight\ given\ to\ PG\ Asphalt\ Binder\ Content\ pay\ adjustment,$ from Table 450.92-1, $expressed\ as\ a\ decimal$

C. Pay Adjustment for Volumetrics (Air Voids).

Pay adjustment for Volumetrics (Air Voids) shall be applied to Pay Item 999.491 at the completion of the HMA Lot. The total Lot pay adjustment for Volumetrics (Air Voids) will be determined as follows:

$$PA_{Air\ Voids} = \sum (PF_i - 1)(Q_i)(P_i)(PAW_{Air\ Voids})$$

Where: $PA_{Air\ Voids} = Pay\ adjustment\ in\ dollars\ for\ Volumetrics\ (Air\ Voids)$
$PF_i = Pay\ factor\ based\ on\ Quality\ Level\ (PWL)\ of\ Volumentrics\ (Air\ Voids)\ for\ individual\ Lot\ (i)$
$Q_i = Quantity\ represented\ by\ individual\ Lot\ (i)\ in\ tons$
$P_i = Contract\ unit\ price\ per\ ton\ for\ individual\ Lot\ (i)$
$PAW_{Air\ Voids} = Weight\ given\ to\ Volumetrics\ (Air\ Voids)\ pay\ adjustement,$ from Table 450.92-1, $expressed\ as\ a\ decimal$

D. Pay Adjustment for In-Place HMA Mat Density.

Pay adjustment for In-Place HMA Mat Density shall be applied to Pay Item 999.492 at the completion of the HMA Lot. The total Lot pay adjustment for In-Place HMA Mat Density will be determined as follows:

$$PA_{In-Place\ Density} = \sum (PF_i - 1)(Q_i)(P_i)\left(PAW_{In-Place\ Density}\right)$$

Where: $PA_{In-Place\ Density} = Pay\ Adjustment\ in\ dollars\ for\ In\ Place\ HMA\ Mat\ Density$
$PF_i = Pay\ factor\ based\ on\ Quality\ Level\ (PWL)\ of\ In\ Place\ HMA\ Mat\ Density\ for\ individual\ Lot\ (i)$
$Q_i = Quantity\ represented\ by\ individual\ Lot\ (i)\ in\ tons$
$P_i = Contract\ unit\ price\ per\ ton\ for\ individual\ Lot\ (i)$
$PAW_{In-Place\ Density} = Weight\ given\ to\ In\ Place\ HMA\ Density\ pay\ adjustment,$ from Table 450.92-1, $expressed\ as\ a\ decimal$

E. Pay Adjustment for Thickness.

Pay adjustment for Thickness shall be applied to Pay Item 999.493 at the completion of the HMA Lot. The total Lot pay adjustment for Thickness will be determined as follows:

$$PA_{Thickness} = \sum (PF_i - 1)(Q_i)(P_i)(PAW_{Thickness})$$

Where: $PA_{Thickness} = Pay\ adjustment\ in\ dollars\ for\ Thickness$
$PF_i = Pay\ factor\ based\ on\ Quality\ Level\ (PWL)\ of\ Thickness\ for\ individual\ Lot(i)$
$Q_i = Quantity\ represented\ by\ individual\ Lot\ (i)\ in\ tons$
$P_i = Contract\ unit\ price\ per\ ton\ for\ individual\ Lot\ (i)$
$PAW_{Air\ Voids} = Weight\ given\ to\ Thickness\ pay\ adjustment,$ from Table 450.92-1, $expressed\ as\ a\ decimal$

F. Pay Adjustment for Ride Quality.

Pay adjustment for Ride Quality shall be applied to Pay Item 999.494 at the completion of all HMA Lots. Although Ride Quality Acceptance testing will be performed only on the final pavement course, the pay adjustment will be applied to the total quantity of all HMA pavement courses placed. Since each wheel path of the final pavement course represents a Lot for Ride Quality, the quantity for each Lot shall be computed by dividing the total quantity of all pavement courses placed by the

number of wheel paths for all lanes tested in the final pavement course. The total Lot pay adjustment for Ride Quality will be determined as follows:

$$PA_{Ride\ Quality} = \sum (PF_i - 1)(Q_i)(P_i)\left(PAW_{Ride\ Quality}\right)$$

Where: $PA_{Ride\ Quality} = Pay\ adjustment\ in\ dollars\ for\ Ride\ Quality$

$PF_i = Pay\ factor\ based\ on\ the\ Quality\ Level\ (PWL)\ of\ Ride\ Quality\ for\ individual\ Lot\ (i)$

$Q_i = Quantity\ represented\ by\ individual\ Lot\ (i)\ in\ tons$

$P_i = Contract\ unit\ price\ per\ ton\ for\ individual\ Lot\ (i)$

$PAW_{Ride\ Quality} = Weight\ given\ to\ Ride\ Quality\ pay\ adjustmenmt$, from Table 450.92-1, $expressed\ as\ a\ decimal$

450.93: Payment Items

450.10	Open-Graded Friction Course - 9.5 - Polymer (OGFC - P)	Ton
450.11	Open-Graded Friction Course - 9.5 - Asphalt Rubber (OGFC - AR)	Ton
450.21	SUPERPAVE Surface Course - 4.75 (SSC - 4.75)	Ton
450.211	SUPERPAVE Surface Course - 9.5 - Polymer (SSC - 9.5 - P)	Ton
450.22	SUPERPAVE Surface Course - 9.5 (SSC - 9.5)	Ton
450.221	SUPERPAVE Surface Course - 9.5 - Polymer (SSC - 9.5 - P)	Ton
450.23	SUPERPAVE Surface Course - 12.5 (SSC - 12.5)	Ton
450.231	SUPERPAVE Surface Course - 12.5 - Polymer (SSC - 12.5 - P)	Ton
450.24	SUPERPAVE Surface Course - 19.0 (SSC - 19.0)	Ton
450.241	SUPERPAVE Surface Course - 19.0 - Polymer (SSC - 19.0 - P)	Ton
450.31	SUPERPAVE Intermediate Course - 12.5 (SIC - 12.5)	Ton
450.311	SUPERPAVE Intermediate Course - 12.5 - Polymer (SIC - 12.5 - P)	Ton
450.32	SUPERPAVE Intermediate Course – 19.0 (SIC – 19.0)	Ton
450.321	SUPERPAVE Intermediate Course – 19.0 - Polymer (SIC – 19.0 - P)	Ton
450.41	SUPERPAVE Base Course - 25.0 (SBC - 25.0)	Ton
450.42	SUPERPAVE Base Course – 37.5 (SBC – 37.5)	Ton
450.51	SUPERPAVE Leveling Course - 4.75 (SLC - 4.75)	Ton
450.52	SUPERPAVE Leveling Course – 9.5 (SLC – 9.5)	Ton
450.53	SUPERPAVE Leveling Course – 12.5 (SLC – 12.5)	Ton
450.60	SUPERPAVE Bridge Surface Course - 9.5 (SSC-B - 9.5)	Ton
450.601	SUPERPAVE Bridge Surface Course – 9.5 – Polymer (SSC-B – 9.5 - P)	Ton
450.61	SUPERPAVE Bridge Surface Course - 12.5 (SSC-B - 12.5)	Ton
450.611	SUPERPAVE Bridge Surface Course - 12.5 – Polymer (SSC-B - 12.5 - P)	Ton
450.70	SUPERPAVE Bridge Protective Course - 9.5 (SPC-B - 9.5)	Ton
450.701	SUPERPAVE Bridge Protective Course - 9.5 – Polymer (SPC-B - 9.5 - P)	Ton
450.71	SUPERPAVE Bridge Protective Course – 12.5 (SPC-B – 12.5)	Ton
450.711	SUPERPAVE Bridge Protective Course – 12.5 – Polymer (SPC-B – 12.5 - P)	Ton
450.80	Asphalt Rubber Gap Graded - 12.5 (ARGG - 12.5)	Ton
451.	HMA for Patching	Ton
452.	Asphalt Emulsion for Tack Coat	Gallon
453.	HMA Joint Adhesive	Foot
999.490	HMA Pay Adjustment – PG Asphalt Binder Content[1]	Dollar
999.491	HMA Pay Adjustment – Volumetrics (Air Voids)[1]	Dollar
999.492	HMA Pay Adjustment – In-place Mat Density[1]	Dollar
999.493	HMA Pay Adjustment – Thickness[1]	Dollar
999.494	HMA Pay Adjustment –Ride Quality[1]	Dollar

[1]Not a bid item.

SUBSECTION 460: HOT MIX ASPHALT PAVEMENT FOR LOCAL STREETS

DESCRIPTION

460.10: General

This Subsection shall not be used on MassDOT projects.

This work shall consist of producing and placing HMA pavement on local streets and parking lots. The HMA pavement shall be constructed as shown on the plans and as directed on the prepared or existing base in accordance with these specifications and in close conformity with the lines, grades, compacted thickness and typical cross section as shown on the plans. Each HMA pavement course placed shall be comprised of one of the mixture types listed in Table 460.10-1.

Table 460.10-1: HMA Pavement Courses & Mixture Types

Pavement Course	Mixture Type	Mixture Designation
Surface Course	SUPERPAVE Surface Course – 9.5 SUPERPAVE Surface Course – 9.5 – Polymer SUPERPAVE Surface Course – 12.5 SUPERPAVE Surface Course – 12.5 – Polymer	SSC – 9.5 SSC – 9.5 – P SSC – 12.5 SSC – 12.5 – P
Intermediate Course	SUPERPAVE Intermediate Course – 12.5 SUPERPAVE Intermediate Course – 19.0	SIC – 12.5 SIC – 190
Base Course	SUPERPAVE Base Course – 37.5	SBC – 37.5
Leveling Course	SUPERPAVE Leveling Course – 4.75 SUPERPAVE Leveling Course – 9.5 SUPERPAVE Leveling Course – 12.5	SLC – 4.75 SLC – 9.5 SLC 12.5

460.20: Quality Assurance

A. Quality Assurance Responsibilities.

This is a basic Quality Assurance Specification wherein the Contractor is responsible for controlling the quality of materials and workmanship and the Department is responsible for accepting the completed work based on the measured quality. Quality Assurance is simply defined as "making sure the Quality of a product is what it should be."

The two primary elements of Quality Assurance include Contractor Quality Control (QC), Department Acceptance, and Qualified Personnel. Although Quality Assurance utilizes test results to control production and determine acceptance of the HMA, inspection remains as an important element in controlling the process and accepting the product.

The Contractor is responsible for providing an appropriate Quality Control system to ensure that all materials and workmanship meet the required quality levels for each specified Quality Characteristic. The Contractor will perform all required Quality Control inspection, sampling, and testing in accordance with these specifications and the Contractor's Quality Control Plan.

The Department will monitor the adequacy of the Contractor's QC activities and will perform Acceptance inspection, sampling, and testing. The Department's Acceptance information, and when found acceptable, the Contractor's QC information will be utilized in the Acceptance determination for each Lot of material produced and placed.

B. Hot Mix Asphalt Lots & Sublots.

The quality of the HMA pavement of the same mixture type produced and placed will be inspected, tested, and evaluated on the basis of Lots and Sublots. A Lot is defined as "an isolated quantity of material from a single source which is assumed to be produced or placed by the same controlled process."

Lot sizes for Quality Characteristics subject to the Engineer's Acceptance are as shown in Table 460.20-1.

Changes in the target values, material sources, or JMF for an HMA mixture type will constitute a change in Lot, requiring the establishment of a new Lot. All Lots will be properly identified for accurate evaluation and reporting of HMA quality.

Table 460.20-1: HMA Lot Sizes

Quality Characteristic	Lot Size & Unit of Measure
PG Asphalt Binder Content	Total quantity of an HMA mixture type with the same JMF for same individual pavement course, produced by a single plant, using the same source of materials and placed at a uniform plan thickness within the same construction season.
Volumetrics – Air Voids	
In-place Density	
Thickness	

C. HMA Quality Assurance Requirements.

These Specifications establish two categories under which Hot Mix Asphalt Lots will be produced, placed, evaluated and accepted. Table 460.20-2 defines each of the Lot categories and outlines the required Quality Assurance activities of the Contractor and the Department. The division of the Lot categories is based on the total estimated contract quantity of each individual HMA mixture type per each project location. For contracts containing multiple Hot Mix Asphalt items, it is possible to have work performed under more than one HMA Lot category.

(1) Determination of Lot Size and Lot Category.

When the total contract quantity of an HMA mixture type is < 4,800 tons, it shall be classified as a Minor Lot (Category E Lot).

When the total contract quantity of an HMA mixture type is ≥ 4,800 tons, it shall be classified as a Small Lot (Category D Lot).

If a Lot extends into the subsequent year, the Lot will be ended, and a new Lot will be established for the next year. The Lot category for the subsequent year shall be categorized based on the remaining tonnage to be placed as designated above.

Category D Lots shall not be divided to produce multiple smaller category Lots without the prior approval of the Engineer.

(2) Determination of Sublot Size.

Each HMA Lot will be divided into Sublots. The size of each HMA Sublot shall be as listed in 460.65-1 and Table 460.74-1. If the quantity of HMA at the end of a Lot is equal to or greater than one half of a full Sublot, then such quantity shall be identified and evaluated as a separate Sublot. If the HMA quantity at the end of a Lot is less than one half of a full Sublot, then such quantity shall be combined with the previous full Sublot quantity and shall be identified and evaluated as the final Sublot.

Table 460.20-2: HMA Lot Categories & Quality Requirements

Quality Assurance Requirements	Category D (Small Lot)	Category E (Minor Lot)
Total Quantity for individual Lot of HMA	≥ 4,800 tons	< 4,800 tons
QC Plan Required:	YES	(See Notes 1 and 2)
Contractor QC Inspection Required:	YES (460.64: Quality Control Inspection)	YES (460.64: Quality Control Inspection)
Contractor QC Testing Required:	YES (460.65: Quality Control Sampling and Testing Requirements)	YES (460.65: Quality Control Sampling and Testing Requirements)
Department Acceptance Inspection Performed	50% of Sublots (460.73: Acceptance Inspection)	50% of Sublots (460.73: Acceptance Inspection)
Department Acceptance Testing Performed:	50% of Sublots (460.74: Acceptance Sampling and Testing)	50% of Sublots (460.74: Acceptance Sampling and Testing)

Note 1: If all HMA Lots fall under Category E then a QC Plan is not required. However, if any Lots on the project fall under Category D then any Category E Lots must be addressed in the QC Plan.
Note 2: If a QC Plan is not required, it is still the responsibility of the Contractor to provide to the Engineer any information that is designated as "Per QC Plan" as found in this specification.

MATERIALS

460.30: General

Materials shall meet the requirements in the following Subsection of Division III, Materials and as otherwise specified herein:

Performance Graded Asphalt Binder M3.01.0
Warm Mix Asphalt M3.01.4
Asphalt Anti-Stripping Additive M3.01.5
Asphalt Release Agents M3.01.6
Asphalt Emulsion for Tack Coat M3.03.0
Hot Applied Pavement Joint Adhesive M3.05.4
Hot Mix Asphalt M3.06.0
Hot Mix Asphalt Production Facility M3.12.0
Hot Mix Asphalt Materials Testing Laboratory and Equipment M3.13.0

Table 460.30-1: SUPERPAVE Traffic Level Requirements

Traffic Level Design ADT (vpd) (See Note 1)	Number of Gyrations by Superpave Gyratory Compactor (N_{design})
< 5,000	50
≥ 5,000 but < 25,000 (See Note 2)	75

Note 1: For routes that have heavy truck traffic greater than 5%, a polymer modified surface course should be considered.
Note 2: For routes that have an ADT greater than 25,000 vehicles per day or contain greater than 5% truck traffic, consult MassDOT Pavement Section.

460.31: Hot Mix Asphalt Design

HMA mixtures shall be composed of the following: Mineral aggregate, mineral filler (if required), PGAB, and as permitted, recycled materials. The Contractor shall be responsible for development of an HMA LTMF for each HMA mixture type specified for the contract in accordance with the requirements of 460.30: General.

The Contractor shall develop and submit an LTMF for each HMA mixture type, which is to be proposed as a JMF, a minimum of 60 days prior to the start of HMA production in accordance with the requirements of M3.06.4: Hot Mix Asphalt Mixture Design, M3.06.5: Verification of Laboratory Trial Mix Formula, and MassDOT's Asphalt Mix Design approval process. The Contractor shall not proceed to HMA production until the LTMF is verified by the Department.

CONSTRUCTION METHODS

460.40: General

Prior to the start of any work activity addressed in 460.43: Preparation of Underlying Surface through 460.51: Opening to Traffic, a Construction Quality Meeting shall be held to review the Contractor's QC System. The Contractor shall present and discuss with the Engineer in sufficient detail the specific QC information and activities. The meeting is intended to ensure that the Contractor has an adequate QC System in place and that the Contractor's personnel are fully

knowledgeable of the roles and activities for which they are responsible to achieve the specified level of quality. Contractor personnel required to attend the Construction Quality Meeting include the Construction Quality Control Manager (QC Manager) and all Superintendents.

460.41: Control of Grade and Cross-Section

The Contractor will provide a longitudinal and transverse reference system for the purpose of locating and documenting sampling and testing locations and related uses., i.e. limits of paving. It is the Contractor's responsibility to clearly define this reference system. Work related to this reference system is incidental and will be included as part of the Contractor's QC System.

The Contractor shall furnish, set, and maintain all line and grade stakes necessary to guide the automated grade control equipment. Where required these control stakes shall be maintained by the Contractor and used throughout the operations, from the grading of the subbase material up to and including the final course of the pavement.

Under normal conditions, where more than one course of HMA is to be constructed, the use of the string line for grade control may be eliminated or discontinued after the construction of the initial course of HMA. For resurfacing projects, the use of the string line for grade control may be eliminated. The use of approved automation may then be substituted for the string line where lines and grades are found to be satisfactory by the Engineer.

460.42: Weather Limitations

HMA shall only be placed on dry, unfrozen surfaces and only when the temperature requirements contained in Table 460.42-1 below are met. If the temperature requirements contained in Table 460.42-1 are not met at any point throughout the paving shift, HMA placement shall cease, except as determined and directed in writing by the Engineer depending upon the necessity and emergency of attendant conditions and weather conditions.

The Contractor may continue HMA placement when overtaken by sudden rain, but only with material which is in transit from the HMA production facility at the time, and then only when the temperature of the HMA mixture is within the temperature limits specified and when the existing surface on the roadway is free of standing moisture. The Engineer is not obligated to accept any material that was not already in transit prior to the onset of rain and the Contractor shall suspend operations for the day when the requirements of Subsection 460: Hot Mix Asphalt Pavement for Local Streets cannot be met.

The construction of HMA pavement shall terminate November 15 and shall not be resumed prior to April 1, except as determined and directed in writing by the Engineer depending upon the necessity and emergency of attendant conditions, weather conditions, and location of the project. Only in extreme cases will the placement of Surface Courses be permitted between November 15 and April 1.

Table 460.42-1: Temperature Limitations for HMA Placement

HMA Pavement Course	Lift Thickness (in.)	Minimum Air Temperature (°F)	Minimum Surface Temperature (°F)
Surface Course	<1 ¾	45	50
Surface Course	≥1 ¾	35 (see Note 1)	40
Intermediate Course	All	35 (see Note 1)	40
Base Course	All	35 (see Note 1)	40
Leveling Course	As Specified	45	50

Note 1: When the air temperature falls below 50°F, extra precautions shall be taken in drying the aggregates, controlling the temperatures of the materials, and in placing and compacting the mixtures.

The Contractor shall supply the Engineer with 2 approved dial type thermometers with a temperature range of -50°F to 500°F and 2 infrared pistol thermometer for each paving machine in operation on the project. The thermometers will remain the property of the Contractor upon completion of the project. The infrared pistol thermometers shall read in Fahrenheit and conform to the following requirements:

- Portable and battery operated
- LCD Display to nearest 1°F
- Temperature operating range of 0°F to 750°F
- Accuracy of ± 2%
- Repeatability of ± 5°F
- Emissivity preset at 0.95

460.43: Preparation of Underlying Surface

HMA mixtures shall be placed only upon properly prepared surfaces that are clean from foreign materials. The underlying surface shall be prepared in accordance with the requirements below, prior to the placement of HMA pavement courses.

A. Subbase or Reclaimed Base.

Prior to the placement of HMA Base Course mixtures, the Contractor shall inspect the prepared subbase or reclaimed base material to ensure that it is in conformance with the required grade, cross-section, and in-place density. Subbase or reclaimed base material that is not in accordance with the plans or specifications shall be reworked or replaced to meet the applicable requirements of Subsection 401: Gravel Sub-Base, Subsection 402: Dense Graded Crushed Stone for Sub-Base, or Subsection 403: Reclaimed Pavement for Base Course and/or Sub-Base before the start of HMA placement. The compacted subbase or reclaimed base shall not be frozen or have standing water when placing HMA.

B. Milling Existing HMA Pavement.

When specified on the plans, existing HMA pavement courses shall be milled and removed from the project by the Contractor in accordance with Subsection 415: Pavement Milling.

Adjustments to milling depth shall be approved by the Engineer and shall be used for consideration of the HMA pavement thickness measurements.

Each vertical face of the milled pavement that will be abutted by new pavement shall be thoroughly coated with a hot applied pavement joint adhesive meeting the requirements of 460.30: General immediately prior to placing new HMA mixture adjacent to the vertical face.

C. Patching Existing Pavement Courses.

Areas of existing HMA pavement courses that are significantly distressed or unsound shall be removed and replaced with patches using new HMA. The location and limits of patching will be as identified in the plans or as directed by the Engineer.

Each existing pavement course determined to be unsound shall be removed to the full depth of the pavement course within a rectangular area. For each patch location equal to or greater than 50 ft^2 (and having a minimum dimension of 4 ft) where the existing pavement courses are removed down to subbase, the subbase shall be compacted by mechanical means to not less than 95% of the maximum dry density of the subbase material as determined by AASHTO T 99 Method C at optimum moisture content. Each edge of the patch area shall be sawcut or otherwise neatly cut by mechanical means to provide a clean and sound vertical face. The vertical face of each edge shall be thoroughly coated with a hot applied pavement joint adhesive meeting the requirements of 460.30: General immediately prior to placing the HMA patching mixture.

Delaminated areas of existing pavement courses resulting from pavement milling shall be cut back neatly by mechanical means to the limits of any unsound material. After removing all unsound material, the underlying pavement surface within the patch limits shall receive a thorough tack coat at a rate of application in accordance with 460.43: Preparation of Underlying Surface, Part G(2) prior to placing the HMA patching mixture.

HMA patching mixture shall be the same mixture type as the existing pavement course being patched or as specified on the plans or as directed by the Engineer. The lift thickness of the patching mixture shall not exceed 4 times the nominal maximum aggregate size of the mixture. The patching mixture will be placed by hand or by mechanical means and shall match the thickness, grade, and cross-slope of the surrounding pavement. The HMA patching mixture shall be compacted using a steel wheel roller. For patch areas not large enough to permit use of a roller, compaction shall be accomplished using a mechanical tamper capable of achieving the required in-place density. The in-place density of the HMA patching mixture shall be not less than 90% of the maximum theoretical density of the mixture as determined by AASHTO T 209 (Method A). When the Contractor and Engineer elect to test the in-place density of a patched area using a calibrated density gauge, the test data for the patched area shall be recorded on NETTCP TRFs.

D. Leveling Courses.

HMA Leveling Courses shall only be used when specified in the Contract. The HMA mixture used for a Leveling Course shall be as specified in the Contract and shall conform to the relevant materials requirements of Subsection 460: Hot Mix Asphalt Pavement for Local Streets.

E. Preparation of Curbs, Edging, and Utilities.

All curbs or edging shall be installed or reset to the line and grade established on the plans. The surface elevation of all catch basin frames and grates, manholes, utility valve boxes, or other utility structures located in the pavement shall uniformly match the grade and cross-slope of the final pavement riding surface. Adjustment of all curbs, edging, and utilities shall be completed prior to

the placement of the HMA Surface Course. Hand placement of HMA along curbs and edging or around utilities after placement and compaction of the Surface Course shall not be permitted.

F. Sweeping Underlying Surface.

The Contractor shall provide a mechanical sweeper equipped with a water tank, spray assembly to control dust, a pick-up broom, a dual gutter broom, and a dirt hopper. The sweeper shall be capable of removing millings and loose debris from the underlying surface.

Prior to opening a milled area to traffic, all milled pavement surfaces shall be thoroughly swept in accordance with the applicable milling specification required by the contract to remove all remaining millings and dust. All pavement surfaces shall be swept clean, free of dust, fines, and slurry immediately prior to application of the tack coat. Any new HMA pavement course that has been open to traffic, or that was placed 30 days prior to placement of the subsequent pavement course, shall also be swept immediately prior to application of the tack coat.

G. Asphalt Emulsion for Tack Coat.

A tack coat of asphalt emulsion, meeting the requirements of 460.30: General shall be uniformly applied to existing or new pavement surfaces prior to placing pavement courses as specified below. The existing surface shall be swept clean of all foreign matter and loose material using a mechanical sweeper and shall be dry before the tack coat is applied.

In addition to the requirements below, all vertical surfaces of curbs, edging, utilities, and drainage structures that will be abutted by new pavement shall receive a thorough tack coat application immediately prior to placing each HMA pavement course.

(1) Tack Distributor System.

A pressure distributor shall be used to apply the tack coat. The tack distributor system shall be equipped with the following to control and monitor the application:

a) System for heating the asphalt emulsion uniformly to specified temperature.
b) Thermometer for measuring the asphalt emulsion temperature.
c) Adjustable full circulation spray bar.
d) Positive controls including tachometer, pressure gauge, and volume measuring device.

At least once every 12 months the application rate of the tack distributor system shall be calibrated by the Contractor using the appropriate spray bar nozzle size(s). The calibration shall be in the transverse and longitudinal directions following ASTM D2995. The calibration shall address the spray bar height, nozzle angle, spray bar pressure, thermometers, and strapping stick. Documentation of the annual calibration shall be kept with the tack distributor system and shall be provided to the Engineer when requested.

The use of tack wagons/trailers shall only be allowed for patching or when approved by the Engineer. Regardless of application method the tack application rates shall meet the requirements below.

(2) Tack Application Requirements.

The tack coat material shall be applied by a pressure distributor. All nozzles on the distributor shall be open and functioning. All nozzles shall be turned at the same angle to the spray bar. The nozzles

shall be offset at an angle from the spray bar to prevent the fan from one nozzle from interfering with the fan from another. Proper nozzle angle shall be as determined by the Manufacturer of the distributor spray bar. The spray bar shall be adjusted so that it is at the proper height above the pavement surface to provide a triple overlap spray for a uniform coverage of the pavement surface. A triple lap application requires that the nozzle spray patterns overlap one another such that every portion of the pavement receives spray from exactly three nozzles. Tack coat application rates for specific surface conditions shall be in accordance with the following:

a) On a new HMA surface, not opened to traffic, the emulsion application rate shall equal 0.06 to 0.08 gal/yd².
b) On an existing tight smooth pavement, the emulsion application rate shall equal 0.06 to 0.08 gal/yd².
c) On a milled surface the emulsion application rate shall equal 0.07 to 0.09 gal/yd².
d) On cement concrete base course, the emulsion application rate shall be equal to spray application for adjacent surface.
e) On new HMA patches the emulsion application rate shall equal 0.06 to 0.09 gal/yd².

Tack coat shall be applied to cover a minimum of 95% of the pavement surface.

(3) Tack Inspection.

The asphalt emulsion temperature and application rate shall be periodically measured by the Contractor. If the temperature or application rate is determined to not be in conformance with the specification requirements above, the Contractor shall make appropriate adjustments to the tack application operations.

460.44: Zero Tolerance for Use of Petroleum Products as Release Agents

There is zero tolerance for the use of petroleum products (e.g. diesel, kerosene, etc.) as a release or cleaning agent in the manufacture, loading, transporting, and placement of HMA materials. The Contractor shall ensure conformance with this requirement. Equipment to be used for transferring, hauling, or placing HMA materials shall be inspected by QC personnel per the approved QC Plan and will ensure that no petroleum products are used. Contaminated equipment shall not be used most especially haul units. Haul units and truck companies with repeated violations will not be used to haul HMA materials. Any violations of this policy shall be reported to the Engineer and subject to the following actions:

A. Haul Unit Violations During Loading at the Plant and Transportation to the Project.

Haul units identified by the Contractor to have contaminated beds during initial inspection prior to loading will not be used during that day's placement operations.

If a haul unit is found to be contaminated with an unapproved release agent after it has been loaded, the HMA shall be rejected by the Engineer.

B. Field Equipment Violations.

All equipment used for the placement and compaction of HMA shall not be treated with an unapproved release agent. This includes the paver, material transfer vehicle, rollers, plate compactors, and tools.

Any use of an unapproved release agent will result in the termination of placement operations and the removal of contaminated materials.

460.45: Hot Mix Asphalt Production

HMA production shall conform to the requirements of 460.30: General.

460.46: Hot Mix Asphalt Transportation and Delivery

A. Haul Unit Equipment.

The trucks used to transport HMA to the field placement site shall have tight, clean, smooth metal beds. When necessary to maintain the required HMA temperature, trucks shall be equipped with insulated beds. The truck beds shall be evenly and lightly coated with an approved release agent found on the QCML to prevent HMA mixture adherence. Truck beds shall be kept free of kerosene, gasoline, fuel oil, solvents, or other materials that could adversely affect the HMA mixture in accordance with 460.44: Zero Tolerance for Use of Petroleum Products as Release Agents. Excess lubricant shall not be allowed to accumulate in low spots in the body. The Contractor shall employ sufficient procedures and QC inspection to ensure that all truck beds are free of contaminants, residual HMA, or excess release agent.

B. HMA Protection During Transport.

The HMA shall be transported from the plant to the field placement site in trucks previously cleaned of all foreign materials. During transportation of the HMA from the plant to the placement equipment at the site, each load shall be fully covered at all times, without exception, with canvas or other suitable material of sufficient size and thickness, which is tightly secured to furnish complete protection. Mesh tarps will not be allowed. The HMA shall not be transported such a distance that temperature segregation of the mixture takes place or that excessive crusting is formed on the surface, bottom or sides of the HMA.

C. Coordination and Inspection of HMA Delivery

The dispatching of trucks from the plant shall be continuously coordinated to ensure that all of the HMA mixture planned to be delivered to the field placement site may be placed and compacted before the end of the scheduled workday. During paving operations, the Contractor shall provide for ongoing two-way radio or cellular phone communication between the field placement site and the HMA plant.

The target temperature and allowable range of the HMA when delivered at the field placement site will be established in the Contractor's QC Plan. The Contractor shall measure the temperature of the HMA, either from the trucks prior to discharge or from the paver hopper, using an infrared pistol type thermometer at the minimum frequency indicated in the approved QC Plan. The Contractor shall also visually inspect the delivered HMA for crusting or material (physical) segregation. The Contractor shall reject any loads of HMA with material which is crusted, segregated, or which is not within the delivery temperature range established in the Contractor's QC Plan.

460.47: Hot Mix Asphalt Placement

A. Material Transfer Vehicles.

When specified in the contract, and where the speed limit is 40 mph or greater, an MTV will be required. The MTV shall be used to place all intermediate and surface pavement courses.

(1) MTV Equipment Rentals.

The MTV shall be self-propelled and capable of remixing and transferring the HMA mixture to the paver so that the HMA mat behind the paver has a uniform homogeneous temperature and appearance. The MTV shall be equipped with the following:

a) A truck unloading system, capable of maintaining the planned paving production rate, which shall receive HMA from the trucks and independently deliver the mixture from the trucks to the paver.
b) A paver hopper insert with a minimum capacity of 14 tons shall be installed in the hopper of conventional paving equipment. The paver hopper insert shall be marked to identify the point at which the insert is 50% full.
c) An internal storage bin with a minimum capacity of 25 tons of mixture and a remixing system in the bottom of the storage bin to continuously blend the mixture as it discharges to a conveyor system; or a dual pugmill system located in the paver hopper insert with two full length longitudinally mounted counter-rotating screw augers to continuously blend and feed the mixture through the paver to the screed.

(2) MTV Operations.

The Contractor shall ensure that the MTV is loaded continuously to keep the paver moving. The volume of HMA in the paver hopper insert shall remain above the 25% capacity mark during all paving operations. In the event the MTV malfunctions during HMA placement operations, the Contractor shall continue placement of material until such time there is sufficient HMA placed to maintain traffic in a safe manner. The Contractor may continue placement of HMA until any additional mixture in transit has been placed. Paving Operations may resume only after the MTV has been repaired and is fully operational.

(3) Bridge Loading Restrictions.

The MTV shall be subject to all bridge load restrictions. The Contractor shall verify the sufficiency of the current bridge ratings with the Engineer. In the event that the MTV exceeds the maximum allowable bridge load, the MTV shall be empty when crossing the bridge and shall be moved across without any other Contractor vehicles or equipment being on the bridge. The MTV shall be moved across the bridge in a travel lane and shall not be moved across the bridge on the shoulder. The MTV shall be moved at a speed no greater than 5 mph without any acceleration or deceleration.

B. Pavers.

Each HMA pavement course shall be placed with one or more pavers at the specified grade, cross-slope, and lift thicknesses.

(1) Paver Equipment Requirements.

Each paver shall be a self-contained, power propelled unit and shall produce a finished surface of smooth and uniform texture without segregating, tearing, shoving or gouging the HMA. The pavers shall be equipped with the following:

a) A receiving hopper having sufficient capacity to ensure a uniform and continuous placement operation.
b) Automatic feed controls, which are properly adjusted to maintain a uniform depth of material ahead of the screed.
c) Automatic screed controls with sensors capable of sensing the transverse slope of the screed and providing the automatic signals that operate the screed to maintain grade and transverse slope.
d) An adjustable vibratory screed with full-width screw augers and heated for the full width of the screed.
e) Capable of spreading and finishing HMA pavement courses in widths at least 12 in. more than the width of one travel lane.
f) Capable of being operated at forward speeds to satisfactorily place the HMA.

(2) Paver Operations.

The Contractor shall ensure that the paver is loaded continuously to keep the placement operation moving. The volume of HMA in the paver receiving hopper shall remain above the paver tunnel during all paving operations. Proper practices shall be utilized to ensure that HMA is not dumped or spilled onto the prepared underlying surface in front of the paver by trucks unloading into the receiving hopper. Any material that falls in front of the paver shall be removed before the paver passes over it. The screed vibrator shall be operated at all times.

When the use of an MTV is required the paving operations shall be coordinated in such a manner as to allow the paver to operate at a consistent speed without stopping.

C. Mobile Lighting for Milling and Paving Equipment.

Whenever milling or paving operations are being conducted between the hours of sunset and sunrise, the Contractor shall provide mobile lighting system(s) attached to each piece of mobile milling and paving equipment, including milling machines, mechanical sweepers, material transfer devices, paver machines, and rollers, but shall not include trucks used to transport materials and/or personnel to the work zone or other vehicles that are continually moving in and out of the work zone.

Mobile lighting systems attached to milling and paving equipment shall be in addition to work zone lighting requirements specified in Subsection 850: Traffic Controls for Construction and Maintenance Operations.

Lighting attached to each machine shall be capable of providing a minimum of 1 fc measured 60 ft in front of and behind the equipment. Lighting measurements shall be per Subsection 850: Traffic Controls for Construction and Maintenance Operations. Light fixtures shall be balloon-style or otherwise diffused to minimize glare. Flood lights without diffusers shall not be permitted.

No part of the mobile lighting system shall exceed a height 13 ft above the pavement except in areas with constrained vertical clearances where the height may further be limited by the Engineer.

Existing street or highway lighting shall not eliminate the requirement for the Contractor to provide lighting.

D. HMA Placement Inspection.

The HMA shall be free of identifiable material (physical) segregation or temperature related segregation. The HMA placed shall be a homogeneous mixture that is of uniform temperature. The Contractor shall inspect the mixture in the paver receiving hopper for material (physical) segregation. The Contractor will also inspect the uncompacted HMA mat behind the paver for longitudinal streaks, end-of-load segregation, or other irregularities.

The Contractor shall also measure the temperature differential in the uncompacted mat behind the paver. The transverse line for mat temperature measurement shall be established at a distance within 10 ft behind the paver screed. Temperature measurements shall be obtained by the Contractor using an infrared pistol thermometer at 2-ft intervals along the transverse line across the width of the mat. The difference between the highest and lowest temperature measurement shall not exceed 20°F.

If the maximum mat temperature differential is exceeded, or if material segregation or irregularities in the HMA mat behind the paver are noted, the Contractor shall review the production, transportation, and placement operations and take corrective action. The Contractor shall make every effort to prevent or correct any irregularities in the HMA, such as changing pavers or using different and additional equipment. The Contractor's QC Plan shall fully outline procedures for inspecting the HMA mat during placement, identifying and troubleshooting material segregation or temperature related segregation, and implementing corrective action.

460.48: Hot Mix Asphalt Compaction

A. Compaction Equipment Requirements.

The Contractor shall employ compaction equipment as outlined in the approved lQC Plan. Equipment used for compaction of HMA Base Courses, Intermediate Courses and Surface Courses may include steel wheeled rollers, vibratory rollers, oscillation rollers, or pneumatic-tired (rubber tired) rollers as determined appropriate by the Contractor for the particular mixture type being placed. The number and type of rollers used for breakdown, intermediate, and finish rolling shall be sufficient to achieve the target in-place density and specified course thickness.

B. Compaction Operations.

The rollers shall not crush the aggregate in the HMA mixture and shall be capable of reversing without shoving or tearing the mixture. Rollers shall not be permitted to stop on the mat except to reverse direction. Rollers may also stop on the mat to refill water when the project conditions and safety do not allow for removing the roller from the pavement mat. In these instances, the Contractor shall ensure that the pavement is sufficiently cool to prevent the roller from leaving mat deficiencies. The Contractor shall outline in the QC Plan the proposed roller configuration for each HMA pavement course to be placed.

C. Inspection and Testing of Compacted HMA.

The compacted HMA pavement course shall be free of mat deficiencies listed below and shall meet the requirements for in-place density, and thickness as specified in 460.65: Quality Control Sampling and Testing Requirements, Part F. The Contractor shall inspect each Sublot of HMA throughout the compaction operation and shall further inspect the in-place HMA after Sublot completion and identify any areas of visible material (physical) segregation. The Contractor shall reject any in-place Sublot of HMA which is determined to be segregated. The Contractor will also test each Sublot for in-place density, and thickness as specified in 460.65: Quality Control Sampling and Testing Requirements, Part F. Mat deficiencies include, but are not limited to:

a) Material (physical) segregation.
b) Wavy surface.
c) Tearing of the mat.
d) Non-uniform mat texture.
e) Screed marks.
f) Poor subbase compaction.
g) Poor mix compaction.
h) Poor joints.
i) Transverse (check) cracking.
j) Mat shoving under roller.
k) Bleeding or fat spots in the mat.
l) Roller marks.

460.49: Hot Mix Asphalt Joints

The Contractor shall plan the sequence of HMA placement to minimize transverse and longitudinal joints in each pavement course. Paving operations should employ long pulls or tandem pavers, whenever practicable, to reduce the number and length of joints. Finished joint surfaces, including joints in the roadway and bridge joints, shall be uniform and true to the required grade and cross-slope without deviations exceeding ¼ in., both transversely and parallel to the joint, when measured with a 10-ft standard straightedge.

A. Transverse Joints.

Where the start or end of a new HMA pavement course meets existing HMA pavement, the existing pavement shall be sawcut to form a transverse butt joint for the full depth of all new pavement courses. The sawcut shall follow a straight line and provide a clean and sound vertical face. Material at any intermediate transverse joint resulting from suspension of placement of a new HMA pavement course shall also be sawcut and removed to provide a clean vertical face before continuing placement of the pavement course.

When traffic is to be carried over any transverse joint before completion of an HMA pavement course, the Contractor shall provide a temporary tapered joint with a maximum 12:1 slope. The HMA mixture forming the taper shall be placed on heavy wrapping paper or other suitable material to serve as a bond breaker. The temporary tapered joint shall be sawcut to reveal the full depth of the pavement course and form a transverse butt joint with a clean vertical face. The temporary tapered joint material shall be completely removed before resuming placement of the HMA pavement course.

Prior to the start of HMA placement at each transverse joint, the vertical joint face shall be thoroughly coated with a hot applied pavement joint adhesive meeting the requirements of 460.30: General. The asphalt sealer temperature and application rate for each pavement course shall follow the Manufacturer's recommendation and, when applicable, be established in the Contractor's QC Plan. No reheating of the joint face shall be permitted. Equipment used to apply the hot applied pavement joint adhesive shall be capable of maintaining the sealer at the established temperature and application rate sufficient to uniformly coat the vertical joint face without runoff or accumulation of the asphalt sealer.

B. Longitudinal Joints.

All longitudinal joints in HMA Surface Courses shall be located on the roadway centerline or on a lane line or edge line of the traveled way. The longitudinal joints in each pavement course below the Surface Course shall be successively offset from the joint in the Surface Course by no more than 12 in. and no less than 6 in. Joints shall be straight and parallel to the lane line of the roadway.

(1) Vertical Joints.

When an HMA pavement course is placed using single paver pulls, the Contractor shall employ suitable equipment to confine the longitudinal edge of the HMA mixture to establish an edge that is near vertical. For all HMA Surface Course mixtures placed, when the Contractor's placement operations do not provide a confined and near vertical edge, the longitudinal edge of the Surface Course shall be sawcut full depth and removed to provide a clean vertical face before placement of the adjacent course of HMA.

All longitudinal joint edges of HMA Surface Courses, regardless of whether the joint edge is required to be sawcut, shall be treated prior to placing the adjacent pull of HMA. The vertical joint shall be coated with a hot applied pavement joint adhesive meeting the requirements of 460.30: General. The asphalt sealer shall be applied at a sufficient temperature and application rate for each pavement course sufficient to uniformly coat the vertical joint face without runoff or accumulation of the sealer. The asphalt sealer temperature and application rate shall follow the Manufacturer's recommendation and, when applicable, be established in the Contractor's QC Plan. No reheating of the joint shall be permitted.

When placing an HMA Surface Course with pavers in tandem, the use of the hot applied pavement joint adhesive will be omitted, provided the temperature of the mixture at the longitudinal joint does not fall below 200°F prior to the placement of the adjacent mat.

When the longitudinal edge of any HMA pavement course is placed against an adjoining edge such as existing pavement, curb, gutter, drainage or utility structure, or any metal surface, a tack coat shall be uniformly applied to the entire vertical joint surface in accordance with 460.43: Preparation of Underlying Surface prior to placement of the HMA.

(2) Wedge Joints.

The Contractor may use a longitudinal wedge joint when placing HMA pavement courses at a thickness of 1.25 in. to 3.75 in. as shown in Figure 460.49-1. In instances where the joint will not be subjected to traffic prior to the adjacent pass being placed the maximum thickness may be increased to 5 in.

When a wedge joint is proposed for use, the joint detail shall be included in the Contractor's QC Plan. The wedge joint shall include a notched vertical edge with a minimum depth equal to the nominal maximum aggregate size (NMAS) at the top and bottom of the wedge. The sloped surface of the wedge joint shall not exceed a 6:1 slope. The width of the wedge shall not exceed 6 times the pavement depth. The Contractor shall use a commercially manufactured wedge joint attachment to the paver, or other attachment approved by the Engineer, to form the wedge joint.

Joint adhesive shall not be applied to wedge joints. A tack coat shall be applied to the entire surface of the wedge joint in accordance with 460.43: Preparation of Underlying Surface prior to placement of the adjacent pull of HMA.

Figure 460.49-1: Notched Wedge Joint

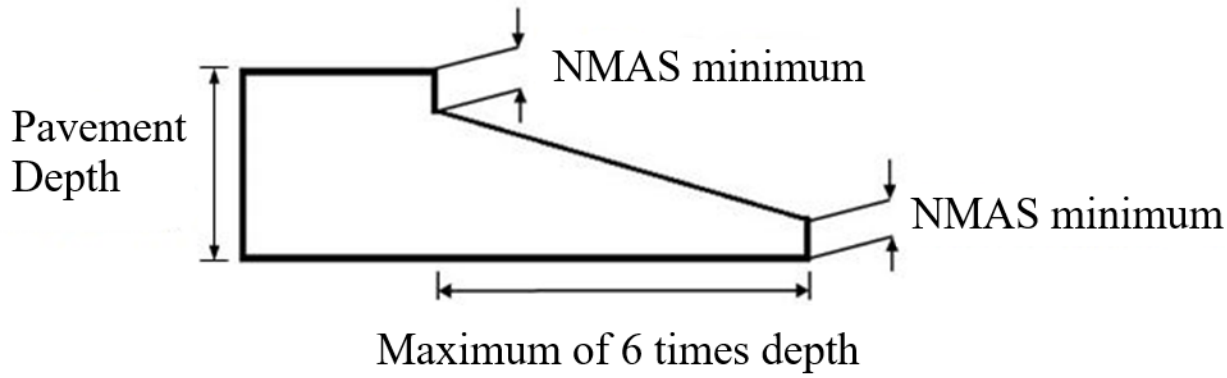

C. Inspection and Testing of HMA Joints.

The hot applied pavement joint adhesive temperature and application rate shall be measured a minimum of once per transverse joint and once per 1,000 ft of longitudinal joint. If the temperature or application rate is determined to not be in conformance with the requirements established in the Contractor's QC Plan, the Contractor shall make appropriate adjustments to the asphalt sealer application operations.

The placement and compaction of HMA at each transverse joint or longitudinal joint shall provide a tight bond between the existing pavement and the new pavement course. The Contractor shall visually inspect each transverse joint and longitudinal joint throughout the placement and compaction operations and shall further inspect the joints after Sublot completion and identify any bumps, depressions, openings, or other visible defects. The Contractor shall reject any in-place Sublot of HMA which is determined to have defective joints.

Finished joint surfaces, including joints in the roadway, shall be uniform and true to the required grade and cross-slope without deviations exceeding ¼ in., both transversely and parallel to the joint, when measured with a 10-ft standard straightedge. The in-place density of the completed HMA pavement course, within 1 ft of either side of the finished joint, shall be not less than 90% of the maximum theoretical density of the mixture as determined by AASHTO T 209 (Method A). The Contractor will measure the surface smoothness and test the in-place density of each transverse joint and longitudinal joint of each Sublot of HMA as specified in 460.65: Quality Control Sampling and Testing Requirements, Part F.

460.50: HMA Pavement on Bridges

All HMA pavement on bridge decks shall conform to 450.50: HMA Pavement on Bridges.

460.51: Opening to Traffic

No vehicular traffic or loads shall be permitted on the newly completed HMA pavement until adequate stability has been attained and the material has cooled sufficiently to a temperature of 140°F or less as indicated by an infrared thermometer. The Contractor shall clearly outline, in the QC Plan, the specific criteria related to opening new pavement to traffic. The final determination to open the pavement to traffic shall be made by the Engineer and the Construction QC Manager.

HMA cores shall be obtained by the Contractor for all Sublots placed each day in accordance with the approved QC Plan prior to opening to traffic. At the discretion of the Engineer, based on climactic or other conditions, obtaining of cores may be delayed for a period up to, but not to exceed, 48 hours.

In the event of force majeure resulting from direction by the Engineer, the Contractor shall document the event and may submit a claim in accordance with current Department procedures. In such event, the Engineer and Construction QC Manager will determine if the affected Sublots must be isolated from the relevant HMA Lot and the HMA quality be evaluated as a separate Lot.

CONTRACTOR QUALITY CONTROL

460.60: General

The Contractor shall provide a QC System and, when required, a QC Plan, adequate to ensure that all materials and workmanship meet the required quality levels for each specified Quality Characteristic. The Contractor shall provide qualified QC personnel and QC laboratory facilities and perform QC inspection, sampling, testing, data analysis, corrective action (when necessary), and documentation as outlined further below.

460.61: Contractor Quality Control Plan

For projects with HMA Category D Lots (Small Lot), the Contractor shall provide and maintain a Quality Control Plan(QC Plan). If all HMA Lots fall under Lot Category E (Minor Lot) then a QC Plan is not required. However, if any Lots on the project fall under Lot Category D, then any Category E Lots must be addressed in the QC Plan. The QC Plan should sufficiently document the QC processes of all Contractor parties (i.e. Prime Contractor, Subcontractors, Producers) performing work required under this specification. The QC Plan is intended to be a project specific document. If a QC Plan is not required, it is still the responsibility of the Contractor to provide to the Engineer any information that is designated as "Per QC Plan" as found in this specification.

A. QC Plan Submittal Requirements.

At the pre-construction meeting, the Contractor shall be prepared to discuss the QC Plan. Information to be discussed shall include the proposed QC Plan submittal date, QC organization, and sources of materials. The Contractor shall submit the QC Plan to the Engineer for approval prior to the start of any work activities related to HMA pavement construction (including preparation of underlying surface) addressed in 460.43: Preparation of Underlying Surface thru 460.51: Opening

to Traffic. The Contractor shall not start work on the subject work items without an approved QC Plan.

B. QC Plan Format and Contents.

The QC Plan shall be structured to follow the format and section headings outlined in the MassDOT Model QC Plan.

C. QC Plan Approval and Modifications.

Approval of the QC Plan will be based on the inclusion of the required information. Revisions to the QC Plan may be required prior to approval for any part of the QC Plan that is determined by the Engineer to be insufficient. Approval of the QC Plan does not imply any warranty by the Department that the QC Plan will result in completed work that complies with the specifications. It remains the responsibility of the Contractor to demonstrate such compliance. The Contractor may modify the QC Plan as work progresses when circumstances necessitate changes in Quality Control personnel, laboratories, or procedures. In such case, the Contractor shall submit an amended QC Plan to the Department for approval a minimum of 3 calendar days prior to the proposed changes being implemented.

460.62: Quality Control Personnel Requirements

The Contractor's QC organization shall, at a minimum, consist of the personnel outlined below that meet the described minimum qualifications. Every effort should be made to maintain consistency in the QC organization, however substitution of qualified personnel shall be allowed. When circumstances necessitate substitution of QC personnel not originally listed in the approved QC Plan, the Contractor shall submit an amended QC Plan for approval in accordance with 460.61: Contractor Quality Control Plan, Part C.

A. Construction Quality Control Manager.

The Contractor's QC System and QC Plan shall be administered by a qualified Construction QC Manager. The QC Manager must be a full-time employee of the Contractor or a QC consultant engaged by the Contractor. The QC Manager (or their assistant in the QC Manager's absence) shall have full authority to institute any and all actions necessary for the successful implementation of this specification and the QC Plan. The QC Manager (or their assistant in the QC Manager's absence) shall be available to communicate with the Engineer at all times.

Principal responsibilities of the QC Manager shall include preparation and submittal of the Contractor's QC Plan, managing the activities of all QC personnel, communicating on quality issues within the Contractor's organization, and ensuring that all requirements outlined in the approved QC Plan are met.

The QC Manager, at a minimum, shall be trained in Quality Assurance Fundamentals through the NETTCP or comparable Quality Assurance training.

B. Production Facility Quality Control Technician(s).

All Contractor QC sampling, testing, and inspection conducted at the HMA production facility shall be performed by qualified Production Facility Quality Control Technicians (Plant QCTs). The Contractor shall provide a sufficient number of Plant QCTs to adequately implement the minimum

QC requirements contained in Subsection 460: Hot Mix Asphalt Pavement for Local Streets and as outlined in the approved QC Plan.

All Plant QCTs who are performing testing shall be certified as an HMA Plant Technician by the NETTCP. QC inspection and sampling may be performed by a person qualified by the QC Manager.

C. Laboratory Quality Control Technician(s).

Any QC testing that is performed at off-site laboratories (i.e. other than at the production facility or field site) shall be performed by qualified Laboratory Quality Control Technicians (Laboratory QCTs). The Contractor shall provide a sufficient number of Laboratory QCTs to adequately implement the minimum Quality Control requirements contained in Subsection 460: Hot Mix Asphalt Pavement for Local Streets and Parking Lots and as outlined in the approved QC Plan.

All Laboratory QCTs who are performing testing shall be certified as a HMA Plant Technician by the NETTCP.

D. Field Quality Control Technician(s).

All Contractor QC sampling, testing, and inspection conducted at the HMA field placement site shall be performed by qualified Field Quality Control Technicians (Field QCTs). The Contractor shall provide a sufficient number of Field QCTs to adequately implement the minimum QC requirements contained in Subsection 460: Hot Mix Asphalt Pavement for Local Streets and Parking Lots and as outlined in the approved QC Plan.

All Field QCTs shall be certified as an HMA Paving Inspector as certified by the NETTCP. QC inspection and sampling may be performed by a person qualified by the QC Manager.

460.63: Quality Control Laboratory Facility Requirements

All Contractor QC testing shall be performed in laboratories qualified through the NETTCP LQP or accredited through AAP. The QC laboratory shall conform to 460.30: General.

460.64: Quality Control Inspection

The Contractor shall perform QC inspection of all work items addressed under this specification. Inspection activities during HMA production and placement may be performed by qualified Production personnel (e.g. Skilled Laborers, Foremen, and Superintendents). However, the Contractor's QC personnel shall have overall responsibility for QC inspection. The Contractor shall not rely on the results of the Department's Acceptance inspection for QC purposes. The Engineer shall be provided the opportunity to monitor and witness all QC inspection.

QC inspection activities must address the following four primary components:

a) Equipment.
b) Materials.
c) Environmental Conditions.
d) Workmanship.

The minimum frequency of QC inspection activity shall be in accordance with the requirements below and as outlined in the approved QC Plan. NETTCP IRFs may be used by the Contractor to document the results and findings of QC inspection.

A. QC Inspection for Preparation of Underlying Surface.

The Contractor's personnel will perform QC inspection during preparation of the underlying surface in accordance with the requirements of 460.43: Preparation of Underlying Surface. The minimum items to be inspected shall be as outlined in Table 460.64-1 and Table 460.64-2. The Contractor shall identify in the QC Plan the specific inspection activities necessary to ensure the quality of the work, including any additional inspection activities not specifically listed in Table 460.64-1 and Table 460.64-2.

Table 460.64-1: Minimum QC Inspection of HMA Patching Operations

Inspection Component	Inspection Attribute	Minimum Inspection Frequency	Point of Inspection	Inspection Method
Equipment	As specified in QC Plan	Per QC Plan	Per QC Plan	Per QC Plan
Materials	Aggregates & PG Binder (Correct Type)	Per QC Plan	HMA Production Facility	Visual Check & Manufacturer COC
	HMA Mixture (Correct Type)	Per QC Plan	From Haul Vehicle at Patching Site	Visual Check & Delivery Ticket
	Joint Adhesive (Correct Type)	Per QC Plan	Per QC Plan	Check Manufacturer COC
	Temperature of HMA Mix	4 per Day (See Note 1)	From Haul Vehicle at Patching Site	Check Measurement
Environmental Conditions	Underlying Surface Soundness & Moisture	Per QC Plan	Underlying Surface	Visual Check
	Temperature of Air & Underlying Surface	1 per Day (See Note 2)	At Patching Site	Check Measurement
Workmanship	Sawcut Limit Vertical Face	Per QC Plan	Sawcut Limits	Visual Check
	Joint Adhesive Application Rate	Per QC Plan	Sawcut Limits	Check Measurement
	HMA Lift Thickness	Per QC Plan	HMA Lift	Check Measurement
	Cross-Slope & Profile	Per QC Plan	Compacted HMA	Check Measurement

Note 1: The initial temperature measurements will be taken from haul vehicles on the first or second load.
Note 2: At a minimum, the temperature measurements of the air and underlying surface shall be obtained prior to starting the HMA patching placement.

Table 460.64-2: Minimum QC Inspection of Tack Coat Operations

Inspection Component	Inspection Attribute	Minimum Inspection Frequency	Point of Inspection	Inspection Method
Equipment	As specified in QC Plan	Per QC Plan	Per QC Plan	Per QC Plan
Materials	Asphalt Emulsion (Correct Type)	Per QC Plan	Per QC Plan	Check Manufacturer COC
	Asphalt Emulsion Temperature	Per QC Plan	From Tack Distributor System	Check Measurement
Environmental Conditions	Underlying Surface Cleanliness & Moisture	Per QC Plan	Underlying Surface	Visual Check
	Temperature of Air & Underlying Surface	1 per Day (See Note 1)	At Paving Site	Check Measurement
Workmanship	Asphalt Emulsion Application Rate	Per QC Plan	From Tack Distributor System	Check Measurement
Note 1: As a minimum, the temperature measurements of the air and underlying surface shall be obtained prior to starting the tack coat placement.				

B. QC Inspection for Production & Placement of HMA Lots.

The Contractor's QC personnel will perform QC inspection at both the HMA production facility and at the site of HMA field placement to ensure that the production and placement processes are providing work conforming to the contract requirements. The minimum items to be inspected for each HMA Lot shall be in accordance with the requirements of 460.43: Preparation of Underlying Surface through 460.51: Opening to Traffic and as outlined in Table 460.64-3 and Table 460.64-4. The Contractor shall identify in the QC Plan the specific inspection activities necessary to ensure the quality of the work, including any additional inspection activities not specifically listed in Table 460.64-3 and Table 460.64-4.

Wheel Path Deviations.

For projects having a posted speed equal to or greater than 40 mph with HMA Lots falling under Lot Category D (Small Lots), QC inspection for wheel path deviations in the mainline travel lanes shall be performed for the following pavement courses:

- Surface Course
- Intermediate Course (lift immediately beneath Surface Course only)
- Leveling Course (when placed immediately beneath Surface Course)

A wheel path is defined as 3 ft from and parallel to each longitudinal edge of a travel lane. Each wheel path for all HMA pavement course Lots shall be inspected for Wheel Path Deviations (high points or low points). All Transverse joints, Bridge joints, and structures that are within 3 ft of a wheel path shall be inspected for Wheel Path Deviations.

Inspection shall be performed using a 10-ft standard straightedge in the longitudinal direction on each wheel path. The Sublot size and minimum frequency of QC inspection for Wheel Path Deviations shall be as specified in Table 460.64-4, and in the approved Contractor QC Plan. Each random inspection location shall be established by determining a randomly selected distance along the wheel path in accordance with 460.65: Quality Control Sampling and Testing Requirements, Part A. Additional selective QC inspection for Wheel Path Deviations within each Sublot of compacted HMA pavement courses shall be as determined necessary by the Field QCT and as specified in the Contractor's approved QC Plan.

The variation from the edge of the 10-ft straightedge to the top of the wheel path surface between any two contact points in the wheel path shall not exceed ¼ in. The Contractor shall correct any location in a pavement course wheel path not meeting this requirement. The corrective method(s) proposed by the Contractor shall be subject to the approval of the Engineer and shall be performed at the Contractor's expense.

Table 460.64-3: Minimum QC Inspection at HMA Production Facility

Inspection Component	Inspection Attribute	Minimum Inspection Frequency	Point of Inspection	Inspection Method
Equipment	As specified in QC Plan	Per QC Plan	Per QC Plan	Per QC Plan
Materials	PG Binder (Correct Type)	Per QC Plan	HMA Production Facility	Visual Check & Manufacturer COC
	Aggregates (Correct Type)	Per QC Plan	HMA Production Facility	Visual Check
	RAP	Per QC Plan	HMA Production Facility	Visual Check
	RAS	Per QC Plan	HMA Production Facility	Visual Check & Manufacturer COC
	Release Agent	Per QC Plan	Haul Vehicle Bed at Plant	Check QCML & Visual Check & Manufacturer COC
	Temperature of HMA Mix	4 per Day (See Note 1)	From Haul Vehicle at Plant	Check Measurement
Environmental Conditions	Stockpile Moisture	Per QC Plan	HMA Production Facility	Visual Check
	Air Temperature & Precipitation Forecast	1 per Day	HMA Production Facility	Check Measurement
Workmanship	Uncoated Mixture	Per QC Plan	HMA Production Facility	Visual Check
	Excess Blue Smoke or Moisture	Per QC Plan	HMA Production Facility	Visual Check
	Burnt Mix	Per QC Plan	HMA Production Facility	Visual Check
	Physical Segregation	Per QC Plan	HMA Production Facility	Visual Check

Note 1: The initial temperature measurements shall be taken from the first or second load.

Table 460.64-4: Minimum QC Inspection at HMA Placement Location

Inspection Component	Inspection Attribute	Minimum Inspection Frequency	Point of Inspection	Inspection Method
Equipment	As specified in QC Plan	Per QC Plan	Per QC Plan	Per QC Plan
Materials	HMA Mixture (Correct Type)	Per QC Plan	From Haul Vehicle at Patching Site	Visual Check & Delivery Ticket
	Joint Adhesive (Correct Type)	Per QC Plan	Per QC Plan	Check Manufacturer COC
	Temperature of Delivered HMA Mix	4 per Day (See Note 1)	From Haul Vehicle or Paver Hopper	Check Measurement
Environmental Conditions	Underlying Surface Soundness & Moisture	Per QC Plan	Underlying Surface	Visual Check
	Temperature of Air & Underlying Surface	1 per Day	At Paving Site	Check Measurement
Workmanship	Joint Location & Alignment	Per QC Plan	Per QC Plan	Visual Check
	Sawcut Joint Vertical Face	Per QC Plan	Joint Vertical Face	Visual Check
	Joint Adhesive Application Rate	Per QC Plan	Joint Vertical Face	Check Measurement
	Temperature Differential in HMA Mat	Per QC Plan	HMA Mat Behind Paver	Per 460.47: Hot Mix Asphalt Placement, Part D
	Physical Segregation	Per QC Plan	HMA Mat Behind Paver & Compacted HMA	Visual Check
	HMA Lift Thickness	Per QC Plan	HMA Lift	Check Measurement
	Cross-Slope	Per QC Plan	Compacted HMA	Check Measurement
	Joint Tightness	Per QC Plan	Compacted HMA	Visual Check
	Joint Surface Deviations (See Note 2)	Once per 500 ft per joint	At Finished Joint and Adjusted Structures	10-ft standard straightedge
	Wheel Path Deviations	Once per 2,000 ft per Wheel Path	Wheel Path	10-ft standard straightedge

Note 1: The initial temperature measurements will be taken from the first or second load.
Note 2: When measured with a 10-ft straightedge the deviation shall be less than ⅜ in.

460.65: Quality Control Sampling and Testing Requirements

The Contractor's QC personnel will perform QC sampling and testing at both the HMA production facility and at the site of HMA field placement to ensure that the production and placement processes are providing work conforming to the contract requirements. The Engineer will not sample or test for QC or assist in controlling the Contractor's operations. All QC sampling and testing shall be in accordance with the current AASHTO, ASTM, NETTCP, or Department procedures specified in Table 460.65-1. When a test method has been updated or superseded, the superseding specification shall be used. If a test method has been removed from circulation with no replacement then that test method shall be used until otherwise noted. The Contractor shall furnish approved containers for all material samples. The Engineer shall be provided the opportunity to monitor and witness all QC sampling and testing.

A. Random Sampling.

The Contractor's QC System shall utilize stratified random sampling of each Lot produced and placed to assure that all material within the Lot has an equal probability of being selected for testing. The Contractor's qualified QC personnel shall obtain random QC samples at the minimum frequencies specified in Table 460.65-1. In all cases, application of the specified QC sampling frequencies shall result in a minimum of one random sample per Sublot.

Random sample locations shall be determined using the random number tables and procedures contained in ASTM D3665 or an electronic random number generator, as presented by the NETTCP. The determination of all random sample locations shall be documented on NETTCP Standard Test Report Form D3665RNG. The Contractor will provide the Engineer with the random QC sampling locations selected and documented for each Sublot prior to production and placement of the relevant Sublots.

B. Selective Sampling.

The Contractor's QC System may also utilize selective sampling (i.e. non-random samples), as needed, to provide supplemental information to assist in maintaining all production and placement processes in control. The Contractor's qualified QC personnel shall obtain selective QC samples from any Sublot as determined necessary and in accordance with the guidelines established in the approved QC Plan. Selective QC core samples shall not be obtained within a 10-ft radius of an Department's random Acceptance sample. Selective QC samples shall not be used as a basis to dispute the Department's Acceptance test results.

C. QC Sample Identification System.

The Contractor shall establish a reliable system for the identification of all QC samples obtained. All HMA loose mixture samples and core samples shall be correctly labeled with the following minimum information:

(a) Contract No.
(b) Date of Sample.
(c) Bid Item Number.
(d) Mixture Type.
(e) Mixture ID Number.
(f) Lot & Sublot No.
(g) Sample No.
(h) Sample Type (i.e. Random or Selective).
(i) Sample Location (e.g. Station & Offset).

The Contractor's system and procedures for identification of QC samples shall be outlined in the approved QC Plan.

D. Retention of Split Samples.

The Contractor's qualified QC personnel shall obtain all material samples (HMA loose mix samples and cores) for QC testing. The Contractor will retain split samples from each HMA loose mix sample. If requested, these split samples will be provided to the Engineer. The Contractor shall retain the original core samples after testing to serve as "split samples" and protect them from damage. All split samples shall be properly labeled and stored for a period of 30 days, or until tested. The retained split samples may be discarded prior to the required 30 days when agreed upon by the Contractor and the Department.

E. Quality Control Testing of Prepared Underlying Surface.

The Contractor's QC personnel will perform QC testing during preparation of the underlying surface. For projects having a posted speed equal to or greater than 40 mph with HMA Lots falling under Lot Category D (Small Lots), QC testing of the prepared underlying surface in the mainline travel lanes shall be performed. All QC testing shall be in accordance with the current AASHTO, ASTM, NETTCP, or Department procedures specified in Table 460.65-1. The Engineer shall be provided the opportunity to monitor and witness all QC testing.

Table 460.65-1: Minimum QC Sampling & Testing of Prepared Underlying Surface

Quality Characteristic	Test Method(s)	Sublot Size	Minimum Test Frequency	Point of Sampling	Sampling Method
HMA Patching Mixture: PG Asphalt Binder Content	AASHTO T 308	300 tons	1 per Sublot	From Haul Vehicle at Plant	Random AASHTO R 97
HMA Patching Mixture: Combined Agg. Gradation	AASHTO T 30	300 tons	1 per Sublot	From Haul Vehicle at Plant	Random AASHTO R 97
HMA Patching Mixture: Maximum Theo. Specific Gravity	AASHTO T 209 (Method A)	300 tons	1 per Sublot	From Haul Vehicle at Plant	Random AASHTO R 97
HMA Patching Mixture: In-place Density	AASHTO T 343 or T 355	100 ft² per each Patch Area	1 per Sublot	From Compacted HMA Patch	Random AASHTO T 343 or T 355

F. Quality Control Testing of HMA Lots.

The Contractor's QC personnel will perform QC testing at both the HMA production facility and at the site of HMA field placement to ensure that the production and placement processes are providing work conforming to the contract requirements. The Engineer shall be provided the opportunity to monitor and witness all QC testing of HMA. All QC testing of HMA Lots shall be in accordance with the current AASHTO, ASTM, NETTCP, or Department test methods specified in Table 460.65-2 and the procedures outlined below.

Table 460.65-2: Minimum Quality Control Sampling & Testing of HMA Lots

Quality Characteristic	Test Method(s)	Sublot Size	Minimum Test Frequency	Point of Sampling	Sampling Method
RAP Asphalt Binder Content	AASHTO T 308	Per QC Plan	Per QC Plan	At HMA Plant Per QC Plan	Random AASHTO R 90
RAP Gradation	AASHTO T 30	Per QC Plan	Per QC Plan	At HMA Plant Per QC Plan	Random AASHTO R 90
Aggregate Gradation	AASHTO T 27	Per QC Plan	Per QC Plan	At HMA Plant Per QC Plan	Random AASHTO R 90
PG Asphalt Binder Content	AASHTO T 308	1,200 tons	1 per Sublot (See Note 1)	From Haul Vehicle at Plant	Random AASHTO R 97 and R 47
Combined Aggregate Gradation	AASHTO T 30	1,200 tons	1 per Sublot (See Note 1)	From Haul Vehicle at Plant	Random AASHTO R 97 and R 47
Maximum Theo. Specific Gravity	AASHTO T 209 (Method A)	1,200 tons	1 per Sublot (See Note 1)	From Haul Vehicle at Plant	Random AASHTO R 97 and R 47
Bulk Specific Gravity	AASHTO T 166 (Method A)	1,200 tons	1 per Sublot (See Note 1)	From Haul Vehicle at Plant	Random AASHTO R 97 and R 47
Volumetrics: Air Voids, VMA, VFA	AASHTO T 312 and R 35	1,200 tons	1 per Sublot (See Note 1)	From Haul Vehicle at Plant	Random AASHTO R 97 and R 47
In-place HMA Mat Density (Density Gauge)	AASHTO T 343 or T 355	600 tons	1 per Sublot (See Note 1)	From Compacted HMA Course	Selective & Random AASHTO T 343 or T 355
In-place HMA Mat Density (Cores)	AASHTO T 269	1,200 tons	1 per Sublot (See Note 1)	From Compacted HMA Course	Random AASHTO R 67
Thickness	ASTM D3549	1200 tons	1 per Sublot (See Note 1)	From Compacted HMA	Random AASHTO R 67
Transverse Joint Density	AASHTO T 343 or T 355	Each Joint for every 500 tons	1 per Sublot (See Note 1)	At Finished Joint	Random AASHTO T 343 or T 355
Longitudinal Joint Density	AASHTO T 343 or T 355	1,000 feet per Joint	1 per Sublot (See Note 1)	At Finished Joint	Random AASHTO T 343 or T 355

Note 1: In the event that the total HMA production for one calendar week is less than one Sublot, a minimum of one random QC sample shall be obtained for the week's production.

(1) PG Asphalt Binder Grading.

QC testing of PG Asphalt Binder shall be performed by the PGAB Supplier in accordance with AASHTO R 26 and the Supplier's approved PGAB QC Plan. The Contractor shall submit to the Engineer the Supplier's COC along with copies of the COA showing the certified test results for each Supplier Lot of PGAB from which the HMA Producer's PGAB was obtained. A copy of the COA and a copy of all BOLs for the Lot of PGAB being used shall be kept in the Contractor's QC laboratory.

If the Contractor modifies the PGAB at the HMA production facility through blending or introduction of an asphalt binder modifier, the Contractor (i.e. HMA Producer) shall assume responsibility as the PGAB Supplier per AASHTO R 26. In such case, the Contractor shall obtain and test a minimum of one random sample of the modified PGAB for each 24,000 tons of HMA produced for the project to determine conformance with M3.01.0: Performance Graded Asphalt Binder.

(2) Aggregate Gradation.

The virgin aggregates utilized in each HMA Lot shall be tested for Gradation in accordance with AASHTO T 27. The Sublot size and minimum frequency of QC testing for Aggregate Gradation shall be as specified in the Contractor's approved QC Plan. Aggregate samples shall be obtained at the HMA plant from aggregate bins or stockpiles in accordance with AASHTO R 90.

(3) PG Asphalt Binder Content.

Each HMA Lot produced and placed shall be tested for PG Asphalt Binder Content in accordance with AASHTO T 308. The Sublot size and minimum frequency of QC testing for PG Asphalt Binder Content shall be as specified in Table 460.65-2. Each material sample for PG Asphalt Binder Content shall be obtained at the HMA plant from a randomly selected quadrant from the haul vehicle in accordance with 460.65: Quality Control Sampling and Testing Requirements, Part A and AASHTO R 97 and R 47.

(4) Combined Aggregate Gradation.

Each HMA Lot produced and placed shall be tested for Combined Aggregate Gradation in accordance with AASHTO T 30. The Sublot size and minimum frequency of QC testing for Combined Aggregate Gradation shall be as specified in Table 460.65-2. Each material sample for Combined Aggregate Gradation shall be obtained at the HMA plant from a randomly selected quadrant from the haul vehicle in accordance with 460.65: Quality Control Sampling and Testing Requirements, Part A and AASHTO R 97 and R 47.

Minimum Action Limits are provided in Table 460.65-3, however, the Action Limits to be used for each HMA Lot shall be as specified in the Contractor's approved QC Plan. If the QC test results for an individual Sublot fall outside of the Action Limits, the Contractor shall evaluate the HMA production process and determine any adjustments necessary to bring the Combined Aggregate Gradation back within the Action Limits. If three consecutive Sublot test results fall outside of the Action Limits, the Contractor shall suspend Lot production until it can be demonstrated that the HMA mixture can be produced within the Action Limits. The Contractor's QC personnel shall document all action(s) taken to bring the HMA production process into control.

Table 460.65-3: Minimum Action Limits for Combined Aggregate Gradation

Sieve Size	Action Limit
Passing No. 4 Sieve and larger sieve sizes	JMF Target ± 6%
Passing No. 8 sieves	JMF Target ± 5%
Passing No. 16 to No. 50 sieves (inclusive)	JMF Target ± 3%
Passing No. 100 sieve	JMF Target ± 2%

(5) Maximum Theoretical Specific Gravity.

Each HMA Lot produced and placed shall be tested for Maximum Theoretical Specific Gravity in accordance with AASHTO T 209 Method A. The Sublot size and minimum frequency of QC testing for Maximum Theoretical Specific Gravity shall be as specified in Table 460.65-2. Each material sample for Maximum Theoretical Specific Gravity shall be obtained at the HMA plant from a randomly selected quadrant from the haul vehicle in accordance with 460.65: Quality Control Sampling and Testing Requirements, Part A and AASHTO R 97 and R 47.

(6) Bulk Specific Gravity.

Each HMA Lot produced and placed shall be tested for Bulk Specific Gravity in accordance with AASHTO T 166 (Method A). The Sublot size and minimum frequency of QC testing for Bulk Specific Gravity shall be as specified in Table 460.65-2. Each material sample for Bulk Specific Gravity shall be obtained at the HMA plant from a randomly selected quadrant from the haul vehicle in accordance with 460.65: Quality Control Sampling and Testing Requirements, Part A and AASHTO R 97 and R 47.

(7) Volumetrics (Air Voids, VMA, VFA).

Each HMA Lot produced and placed shall be tested for Volumetrics (Air Voids, VMA, VFA) in accordance with AASHTO T 312 and R 35. The requirement for Volumetric testing of laboratory compacted specimens applies to all HMA mixtures designed by the Superpave volumetric method. The Sublot size and minimum frequency of QC testing for Volumetrics shall be as specified in Table 460.65-2. Each material sample for Volumetrics shall be obtained at the HMA plant from a randomly selected quadrant from the haul vehicle in accordance with 460.65: Quality Control Sampling and Testing Requirements, Part A and AASHTO R 97 and R 47.

(8) In-place HMA Mat Density.

Each HMA Lot produced and placed shall be tested for In-place Density using a density gauge or cores as specified below. The requirement for In-Place Density testing applies to all pavement courses, with the exception of Open Graded Friction Courses and Leveling Courses. The Sublot size and minimum frequency of random QC testing for In-place Density by either density gauge or core shall be as specified in Table 460.65-2.

(a) Testing In-Place Density by Density Gauge.

Initial QC testing of In-Place Density during compaction of HMA pavement courses shall be performed selectively (or randomly when determined appropriate by QC personnel) using a density gauge in accordance with AASHTO T 343 or T 355.

The density gauge shall be calibrated at least once every 12 months in accordance with the applicable test method and Manufacturer's recommendations. Calibration certificates shall be kept with the gauge and a copy shall be provided to the Engineer upon request. This calibration does not include calibration of the gauge to the specific HMA pavement placed.

(b) Testing In-Place Density by Cores.

Final QC testing of In-Place Density of all applicable HMA pavement courses shall be performed using 6-in. diameter cores in accordance with AASHTO T 269. In-Place Density shall be determined from each core by comparing the Bulk Specific Gravity of the core to the Maximum Theoretical Specific Gravity for the Sublot. Each core location shall be established by determining a randomly selected tonnage and corresponding approximate longitudinal distance within the Sublot, along with a randomly selected offset distance in accordance with 460.65: Quality Control Sampling and Testing Requirements, Part A. If the randomly determined sampling location coincides with one of the following conditions, a new random sampling location shall be generated and documented:

1. Within 1 ft from edge of pavement course to be left unconfined upon project completion.
2. Within 1 ft of any longitudinal joint or transverse joint.
3. Within 3 ft of any drainage structure.
4. For shoulders less than or equal to 3 ft, the shoulder width shall be excluded from random sampling.

Core samples shall be obtained in accordance with AASHTO R 67 within 48 hours of completion of the Sublot. To protect the integrity of the core, when the target lift thickness is less than 1.50 in., the Contractor shall drill so that the sampled core is comprised of at least the lift to be tested as well as the lift immediately below. All cores shall be protected against damage and tested within 48 hours after they have been obtained. The Contractor shall fill all core holes, whether from QC sampling or the Department Acceptance sampling, with fresh HMA mixture from the same JMF. The filled core holes shall be thoroughly compacted.

(9) Thickness.

Each HMA pavement course specified to be placed at a compacted thickness of 1.25 in. or greater shall be tested for Thickness using cores, with the exception of the following courses:

1. Leveling Course.
2. In the absence of a Leveling Course, the first pavement course placed over existing pavement. A milled surface is not considered an existing pavement. HMA placed on top of a milled surface shall be subject to thickness testing, unless it is a leveling course, or if the milling operation, approved by the Engineer, caused the pavement thickness to vary.

The aforementioned pavement courses are exempt only from determination of Thickness using cores and the corresponding evaluation of Lot quality. The Contractor is still responsible for ensuring the minimum required thickness of these pavement courses using appropriate sampling and testing protocols.

All sampling and testing for Thickness of the applicable pavement courses using cores shall be in accordance with AASHTO R 67 and ASTM D3549, respectively. Core thickness shall be reported to the nearest $^{1}/_{16}$ in. The Sublot size and minimum frequency of random QC testing for Thickness shall be as specified in Table 460.65-2.

(10) Joint Density.

Each transverse joint and longitudinal joint formed during placement of a pavement course shall be tested for Joint Density using a density gauge in accordance with AASHTO T 343 or T 355. The requirement for Joint Density testing applies to all pavement courses, with the exception of Leveling Courses. The Sublot size and minimum frequency of random QC testing for Joint Density shall be as specified in Table 460.65-2.

Each random sampling and testing location shall be established by determining a randomly selected distance along the joint, along with a randomly selected offset distance within 1 ft of either side of the finished joint, in accordance with 460.65: Quality Control Sampling and Testing Requirements, Part A. Additional selective QC sampling and testing of Joint Density within each Sublot of compacted HMA pavement courses shall be as determined necessary by the Field QCT and as specified in the Contractor's approved QC Plan.

460.66: Quality Control Documentation and Data Evaluation

A. QC Inspection Documentation & Evaluation.

The Contractor shall document all QC inspection activity for each HMA Lot Category (Category D or E) produced and placed. All inspection results shall be recorded within 24 hours of inspection on current NETTCP standard IRFs. The QC Manager shall evaluate inspection results in a timely manner to confirm that production and placement processes are in control. The Contractor shall submit hard copies of all IRFs to the Engineer at the completion of each Lot.

B. QC Sampling and Testing Documentation & Data Analysis.

The Contractor shall document all QC sampling and testing data for each HMA Lot Category (Category D or E) produced and placed. All sampling and testing data shall be recorded within 24 hours of testing on current NETTCP standard TRFs. The QC Manager shall evaluate sampling and testing results in a timely manner to confirm that production and placement processes are in control. The Contractor shall submit hard copies of all TRFs to the Engineer at the completion of each Lot.

(1) Control Charts.

The Contractor may use Control Charts as part of the QC System to assist in identifying assignable causes affecting the HMA production and placement processes. When used, Control Charts shall be prepared for the Quality Characteristics subject to QC sampling and testing listed in Table 460.65-2. The Contractor may plot all QC test results of each Lot on Control Charts for individual Sublot measurements or test values (Run Charts). It is also recommended practice for the Contractor to use Control Charts that plot Subgroups of data (e.g. X-Bar Charts, R Charts). When used, the Control Charts shall identify the Contract number, the Payment Item number, the Lot number, the Quality Characteristic, the Control Chart Target, the Upper and Lower Control Chart Limits, and Sublot or Subgroup numbers.

QC personnel should use the Control Chart data to monitor and adjust the production and placement processes or suspend operations as determined necessary. Control Charts for Quality Characteristics related to HMA production should be maintained at the HMA production facility.

Control Charts for Quality Characteristics related to HMA field placement should be maintained at the project field site.

(2) Evaluation of Individual Sublot QC Test Results.

The Contractor shall evaluate the individual QC test results for each HMA Lot Category (Category D or E) produced and placed. Each random QC test result shall be evaluated against the applicable Quality Limits within 24 hours of testing. Each Sublot test value shall be within the applicable Engineering Limits specified in Table 460.76-1.

If the evaluation of the QC testing data indicates that an individual Sublot is not in conformance with the applicable Engineering Limits, the Contractor shall follow the requirements of 460.67: Corrective Action.

460.67: Corrective Action

As part of the Contractor's QC System, the Contractor shall implement corrective action for any part of a Lot that is determined by inspection or testing to not be in conformance with the quality requirements specified in Subsection 460: Hot Mix Asphalt Pavement for Local Streets. If the results of QC inspection or testing identify nonconforming material or workmanship within one or more Sublots, the Contractor shall isolate the Sublot(s) and perform additional inspection or testing to further assess the quality of the Sublot. Selective inspection or testing should be used to determine the limits of non-conformance. If a Sublot test result is outside of the Engineering Limits, the QC Manager and the Engineer will further assess the Sublot quality to determine whether the material in the Sublot can remain in place in accordance with 460.76: Lot Acceptance Determination Based on Testing Data, Part (2).

Based on the results of additional inspection or testing, the Contractor shall prepare a plan of corrective action for the nonconforming Sublot(s). The Corrective action plan shall be submitted to and approved by the Engineer prior to initiating corrective action. All corrective action shall be performed at the Contractor's expense.

460.68: Quality Control Records System

A. Quality Control Daily Diary.

The QC Manager should maintain a Quality Control Daily Diary (QC Daily Diary) to document all major activities or actions related to the Contractor's QC System. The QC Daily Diary serves as a summary record of key actions taken by QC personnel each day. Recommended information which should be recorded in the QC Daily Diary includes:

a) The day's weather or environmental conditions.
b) A summary of production or placement activities completed.
c) Any non-conforming material or workmanship identified.
d) Any corrective actions recommended or taken by QC personnel.
e) Discussions held with other Contractor personnel or Engineer.
f) Visitors to the production facility or field placement operation.

B. Quality Control Record Books.

The Contractor shall maintain one or more ringed binders referred to as "Quality Control Record Books" (QC Record Books) to store all required QC documents. The Contractor may elect to keep an electronic QC Record Book. QC Record Books shall be kept at each HMA production facility or other designated location. QC data for each pavement course shall be organized into separate sections by Quality Characteristic and by Lot number.

QC documents to be stored in the QC Record Book(s) include:

a) A signed copy of the current approved QC Plan.
b) The original signed copies of all completed Inspection Report Forms.
c) The original signed copies of all completed Random Sampling location forms.
d) The original signed copies of all completed Test Report Forms.

Each required record shall be inserted into the corresponding QC Record Book within 24 hours after the document has been completed. The Engineer shall be provided access to all QC Record Books. QC personnel shall also track the daily tonnage of HMA which leaves the production facility and the quantity that is actually placed on the project site.

C. Quality Control Records Retention.

All Contractor QC records identified above shall be retained for a minimum of 7 years. The records shall be protected from damage or alteration. When requested by any State or Federal Agency for audit or similar purposes, the Contractor shall provide complete access to all QC records.

D. Failure to Provide Quality Control Records

The Contractor shall provide the Engineer with requested QC records within 48 hours of the request. Failure to provide the documentation in the required timeframe will result in the withholding of payment.

DEPARTMENT ACCEPTANCE

460.70: General

The Department is responsible for performing all Acceptance activities and making the final acceptance determination for each HMA Lot produced and placed. The Department's Acceptance System will include monitoring the Contractor's QC activity and performing Acceptance inspection, sampling and testing in order to determine the Quality and corresponding payment for each Lot. These activities will be performed for each HMA Lot Category (Lot Category D and E) as outlined further below.

460.71: Acceptance System Approach

For all HMA Category D and E Lots, the Engineer's Acceptance determination will be based on the Engineer's Acceptance inspection information and Acceptance testing data. The Engineer will perform Acceptance sampling and testing on a minimum of 50% of the Sublots produced and placed.

460.72: Department Monitoring of Contractor Quality Control

The Department will monitor the Contractor's QC System to confirm that QC activities are being performed for each Lot in compliance with this specification and the approved QC Plan. The Engineer will not perform the QC responsibilities of the Contractor or provide constant direction to the Contractor on how to perform Quality Control. The Engineer's monitoring of QC activity will include the following:

a) Periodic visual observation of QC inspection, sampling, and testing.
b) Reviewing QC documentation and records.
c) Providing feedback based on monitoring findings.

When deficiencies in the Contractor's QC System are identified and documented by the Engineer, the Contractor shall take immediate action to address the deficiencies and coordinate appropriate corrective actions with the Engineer. If the material in an HMA Lot where deficiencies in the Contractor's QC System were identified is removed and replaced, and the replacement HMA complies with the Specification requirements, the actions listed below will not apply. If the Contractor fails to acknowledge the deficiency and take appropriate action, the Contractor shall suspend production and placement of the corresponding Lot(s). Failure by the Contractor to comply with the Quality Control requirements in either this specification or the approved QC Plan may result in the withholding of payment.

460.73: Acceptance Inspection

The Engineer will perform Acceptance inspection of all work items addressed under Subsection 460: Hot Mix Asphalt Pavement for Local Streets to ensure that all materials and completed work are in conformance with the contract requirements. Acceptance inspection is intended to visually assess the quality of each HMA Lot produced and placed and will address only the inspection components of Materials and Workmanship in support of the Department's final acceptance determination.

All Acceptance inspection activity by the Department will be performed independent of the Contractor's QC inspection. NETTCP IRFs may be used by the Engineer to document the results and findings of Acceptance inspection.

A. Acceptance Inspection of Prepared Underlying Surface.

The Department will perform Acceptance inspection of the prepared underlying surface prior to placement of HMA. Inspection will be in accordance with Table 460.73-1 and Table 460.73-2.

Table 460.73-1: Department Acceptance Inspection of HMA Patching

Inspection Component	Inspection Attribute	Inspection Method
Materials	Mixture Type & PG Binder Grade (Correct Type)	Visual Check & Manufacturer COC
	Joint Adhesive (Correct Type)	Check Manufacturer COC
Workmanship	Sawcut Limit Vertical Face	Visual Check
	Joint Adhesive Application Rate	Visual Check & Check Measurement
	Cross-Slope & Profile	Check Measurement

Table 460.73-2: Department Acceptance Inspection of Tack Coat

Inspection Component	Inspection Attribute	Inspection Method
Materials	Asphalt Emulsion (Correct Type)	Check Manufacturer COC
Workmanship	Asphalt Emulsion Application Rate	Visual Check, Check Measurement & Confirm Calibration

B. Acceptance Inspection of HMA Lots.

The Department may perform Acceptance inspection at the HMA production facility and will perform Acceptance Inspection at the site of HMA field placement. For purposes of Acceptance inspection, the total quantity of each HMA pavement course produced and placed during the same construction season will constitute a Lot. Each in-place HMA Lot will be divided into 500 lane-feet Sublots. The items to be inspected and minimum frequency of inspection will be in accordance with the requirements outlined in Table 460.73-3.

Wheel Path Deviations.

The Engineer will inspect the HMA pavement for Wheel Path Deviations (high points or low points) using a 10-ft standard straightedge in accordance with the procedures outlined in 460.64: Quality Control Inspection, Part B. The finished surface of each required pavement course will be inspected. The Sublot size and minimum frequency of Acceptance inspection for Wheel Path Deviations will be as specified in Table 460.73-3.

Table 460.73-4: Department Acceptance Inspection of HMA Lots

Inspection Component	Inspection Attribute	Minimum Inspection Frequency	Point of Inspection	Inspection Method
Materials	HMA Mixture Type (Correct Type)	1 per Day	At Paving Site	Visual Check & Delivery Ticket
	Joint Adhesive (Correct Type)	1 per Day	At Paving Site	Check Manufacturer COC
Workmanship	Joint Location & Alignment	50% of Sublots, Once per Joint	At Finished Joint	Visual Check
	Sawcut Joint Vertical Face	50% of Sublots, Once per Joint	Joint Vertical Face	Visual Check
	Joint Adhesive Application Rate	50% of Sublots, Once per Joint	Joint Vertical Face	Visual Check & Check Measurement
	Physical Segregation	50% of Sublots, Once per Lane	Compacted HMA	Visual Check
	Cross-Slope Joint	50% of Sublots, Once per Lane	Compacted HMA	Check Measurement
	Tightness	50% of Sublots, Once per Joint	Compacted HMA	Visual Check
	Joint Surface Deviations	50% of Sublots, Once per Joint	At Finished Joint	10-ft standard straightedge
	Wheel Path Deviations	50% of Sublots, per Wheel Path	Wheel Path	10 ft standard straightedge

460.74: Acceptance Sampling and Testing

A. Random Sampling.

The Department will utilize stratified random sampling to determine the overall quality of each HMA Lot produced and placed. Random Acceptance sample locations will be determined by the Engineer in accordance with ASTM D3665 or by electronic random number generator, as presented by NETTCP. All random Acceptance sample locations will be documented on the most current version of NETTCP Test Report Form D3665.

The Contractor shall furnish the Engineer with approved containers for all Acceptance samples. The Engineer will obtain all random Acceptance samples independent of the Contractor's QC samples at the frequencies outlined below.

Sampling HMA Category D and E Lots.

For projects having a posted speed equal to or greater than 40 mph with HMA Lots falling under Lot Category D (Small Lots), Acceptance testing will be performed by the Engineer for each of the Quality Characteristics specified in Table 460.74-2.

For projects with HMA Lots falling under Lot Category E (Minor Lots), the Engineer will perform Acceptance testing only for in-place HMA mat density and thickness.

The Engineer will obtain Acceptance samples from a minimum of 50% of all Sublots for the applicable Quality Characteristics specified in Table 460.74-2.

B. Selective Sampling.

The Department will utilize selective sampling (i.e. non-random samples) as needed to provide supplemental information to assist in quantifying the quality of apparent nonconforming material. The test results of selective Acceptance samples will not be combined with random Acceptance sample data in the determination of Lot acceptance.

C. Contractor Assistance in Obtaining Acceptance Samples.

The Engineer will obtain all material samples for Acceptance testing. When requested by the Department, the Contractor shall assist the Engineer in obtaining Acceptance samples in accordance with the following requirements:

a) The Acceptance sample location and time will be randomly selected by the Engineer and provided to the Contractor immediately prior to sampling.
b) The Contractor's qualified QC personnel will only provide the physical labor to assist the Engineer in obtaining the Acceptance sample.
c) The Engineer will be present to direct and monitor the taking of the sample.
d) The Engineer will take immediate possession of the Acceptance sample.

Contractor assistance may be requested in obtaining Acceptance samples (random or selective) for In-Place Density and Thickness (HMA cores). The Contractor shall provide adequate traffic control for the Department to obtain cores, regardless of whether the Contractor assists the Engineer in obtaining the Acceptance core samples.

D. Acceptance Sample Identification System.

The Department will use a standard system for the identification of all Acceptance samples. All HMA loose mixture samples and core samples will be labeled by the Engineer with the minimum information indicated under 460.65: Quality Control Sampling and Testing Requirements, Part C.

E. Retention of Split Samples.

Department personnel will obtain all material samples (HMA loose mix samples and cores) for Acceptance testing. The Department will retain Acceptance split samples from each HMA loose mix sample and provide a split sample to the Contractor, if requested. The Engineer will retain the original core samples after testing to serve as "split samples" and protect them from damage. All split samples will be stored by the Department for a period of 30 days, or until tested. These split samples may be utilized if necessary, in to resolve a dispute. The retained split samples may be discarded prior to the required 30 days when agreed upon by the Contractor and the Department.

F. Acceptance Testing of HMA Lots.

The Engineer, or the Engineer's Designated Agent, will perform Acceptance testing using the random samples obtained in accordance with 460.74: Acceptance Sampling and Testing, Part A from the HMA production facility and at the site of HMA field placement. The specific Quality Characteristics subject to the Engineer's Acceptance testing are identified in Table 460.74-1. All Acceptance testing of HMA Lots will be performed by the Engineer in accordance with the AASHTO,

ASTM, NETTCP, or Department test methods specified in Table 460.74-1 and the procedures outlined below. Testing performed on samples obtained from the HMA production facility shall be performed by a NETTCP certified HMA Plant Technician.

(1) PG Asphalt Binder Grading.

The Department will review the Supplier's BO) submitted by the Contractor along with the COC and COA showing the corresponding certified test results for each Supplier Lot of PGAB from which the HMA Producer's PGAB was obtained.

(2) PG Asphalt Binder Content.

The Engineer will test each HMA Acceptance sample obtained for PG Asphalt Binder Content in accordance with AASHTO T 308. The Sublot size and minimum frequency of Acceptance testing for PG Asphalt Binder Content will be as specified in Table 460.74-1. Each material sample for PG Asphalt Binder Content will be obtained at the HMA plant from a randomly selected quadrant from the haul vehicle in accordance with 460.65: Quality Control Sampling and Testing Requirements, Part A and AASHTO R 97 and R 47.

(3) Volumetrics (Air Voids).

The Engineer will test each HMA Acceptance sample obtained for Volumetrics (Air Voids) in accordance with AASHTO T 312 and R 35. The requirement for Volumetric testing of laboratory compacted specimens applies to HMA mixtures for all pavement courses. The Sublot size and minimum frequency of Acceptance testing for Volumetrics will be as specified in Table 460.74-1. Each material sample for Volumetrics will be obtained at the HMA plant from a randomly selected quadrant from the haul vehicle in accordance with 460.65: Quality Control Sampling and Testing Requirements, Part A and AASHTO R 97 and R 47.

(4) Combined Aggregate Gradation.

Each HMA Acceptance sample obtained shall be tested for Combined Aggregate Gradation in accordance with AASHTO T 30. The Sublot size and minimum frequency of Acceptance testing for Combined Aggregate Gradation shall be as specified in Table 460.74-1. Each material sample for Combined Aggregate Gradation shall be obtained at the HMA plant from a randomly selected quadrant from the haul vehicle in accordance with 460.65: Quality Control Sampling and Testing Requirements, Part A and AASHTO R 97 and R 47.

If the Acceptance test results for an individual Sublot fall outside of the Action Limits specified in Table 460.65-2, the Engineer shall inform the Contractor so that they may evaluate the HMA production process and make any adjustments necessary to bring the Combined Aggregate Gradation back within the Action Limits.

Table 460.74-1: Department's Acceptance Sampling and Testing of HMA Lots

Quality Characteristic	Test Method(s)	Sublot Size	Minimum Test Frequency	Point of Sampling	Sampling Method
PG Asphalt Binder Content	AASHTO T 308	1,200 tons	1 per Sublot (See Note 1)	From Haul Vehicle at HMA Plant	Random AASHTO R 97 and R 47
Combined Aggregate Gradation	AASHTO T 30	1,200 tons	1 per Sublot (See Note 1)	From Haul Vehicle at HMA Plant	Random AASHTO R 97 and R 47
Volumetrics: Air Voids	AASHTO T 312 and R 35	1,200 tons	1 per Sublot (See Note 1)	From Haul Vehicle at HMA Plant	Random AASHTO R 97 and R 47
In-place HMA Mat Density (Cores)	AASHTO T 269	1,200 tons	1 per Sublot (See Note 1)	From Compacted HMA Course	Random AASHTO R 67
Thickness	ASTM D3549	1,200 tons	1 per Sublot (See Note 1)	From Compacted HMA Course	Random AASHTO R 67

Note 1: In the event that the total HMA production for one calendar week is less than one Sublot, a minimum of one random Acceptance sample shall be obtained for the week's production.

(5) In-Place HMA Mat Density.

The Engineer will test each HMA Lot produced and placed for In-place HMA Mat Density. The requirement for In-Place Density testing applies to all pavement courses as outlined below.

Testing In-Place Density by Cores.

Acceptance testing of HMA pavement courses for In-place Density will be performed using cores in accordance with the procedures outlined in 460.65: Quality Control Sampling and Testing Requirements, Part F(8)(b). The Sublot size and minimum frequency of Acceptance testing for In-place Density of HMA pavement courses by core will be as specified in 460.74-1. In order to ensure that the correct maximum specific gravity is utilized to determine the In-Place Density of a core, the Engineer reserves the right to determine the maximum specific gravity of the core itself after its bulk specific gravity has been determined and verified.

(6) Thickness.

Each HMA pavement course specified to be placed at a compacted thickness of 1 inch or greater, with the exception of the HMA pavement courses identified in 460.65: Quality Control Sampling and Testing Requirements, Part F(9), will be tested by the Engineer for Thickness using cores. Acceptance sampling and testing for Thickness of the applicable pavement courses shall be in accordance with AASHTO R 67 and ASTM D3549, respectively. The Sublot size and minimum frequency of Acceptance testing for Thickness will be as specified in Table 460.74-1.

460.75: Lot Acceptance Determination Based on Inspection Results

The Department's Acceptance Inspection results will be used in the final Acceptance determination for all HMA Lots (Lot Category D and E). Prior to final Acceptance of each HMA Lot produced and

placed, the Department will periodically evaluate all Acceptance inspection information for the prepared underlying surface and the Lot. The materials and product workmanship for the completed work will be evaluated for conformance with the plans and the requirements specified in 460.43: Preparation of Underlying Surface through 460.51: Opening to Traffic.

When the Acceptance information identifies deficiencies in either material quality or product workmanship for any underlying surface location or HMA Sublot(s), the location or Sublot(s) will be isolated and further evaluated by the Engineer through additional Acceptance inspection (or sampling and testing, if relevant or possible). Depending upon the findings of the additional Acceptance inspection activity, the Engineer will determine the disposition of the nonconforming work in accordance with Subsection 5.03: Conformity with Plans and Specifications.

After each HMA Lot (and corresponding prepared underlying surface) is complete, including any corrective action, the Engineer will evaluate all Acceptance inspection information for the Work. The Department will accept the subject Work if the Engineer's evaluation of all inspection information for the completed Lot (and underlying surface) indicates that the corresponding materials and product workmanship meet the specified requirements (provided the evaluation of all Acceptance testing data for the subject work per 460.76: Lot Acceptance Determination Based on Testing Data also finds the work to be acceptable).

460.76: Lot Acceptance Determination Based on Testing Data

Evaluation of Lot Category D and E Testing Data.

Prior to final acceptance of each HMA Lot produced and placed; the Engineer will periodically evaluate all available Acceptance testing data for the Lot.

(1) Conformance with Engineering Limits.

The Engineer will evaluate all Acceptance testing data and Contractor QC testing data for each Lot to determine conformance with the Engineering Limits in Table 460.76-1. Each Sublot test value for the Acceptance Quality Characteristics identified in Table 460.76-1 shall be within the Engineering Limits.

If a Sublot test result is outside of the Engineering Limits, the QC Manager and Engineer will further assess the Sublot quality to determine whether the material in the Sublot can remain in place. The Engineer will determine the disposition of the Sublot in accordance with Subsection 5.03: Conformity with Plans and Specifications.

If the Engineer's assessment determines that the material quality is not sufficient to permit the Sublot to remain in place the Sublot shall be removed and replaced. When a nonconforming Sublot is corrected or replaced, the Engineer will perform Acceptance testing of the Sublot and evaluate the test results for conformance with the Engineering Limits. Once the above requirements have been met, the Department will accept all completed Sublots.

(2) Final Lot Acceptance Determination.

For each HMA Category D and E Lot produced and placed, the Engineer will evaluate all Acceptance testing data for the Lot after all HMA Sublots are complete in-place.

After each HMA Lot is complete, including any corrective action, the Engineer will perform a final evaluation of all Acceptance data and Contractor QC data for the Lot. The Department will accept the Lot if the Engineer's evaluation of all testing data for the Lot is in conformance with this specification and the contract documents.

Table 460.76-1: Quality Limits for Acceptance of HMA Lots

Quality Characteristic	Target	Lower Engineering Limit	Upper Engineering Limit
PG Asphalt Binder Grading	Per Binder Grade Specified	Per Binder Grade Specified	Per Binder Grade Specified
PG Asphalt Binder Content	Per JMF	Target - 0.4%	Target + 0.4%
Volumetrics: Air Voids	4%	2%	6%
In-Place HMA Mat Density (Cores)	95 % of G_{mm}	91.5 % of G_{mm}	98.5 % of G_{mm}
Thickness: (All Courses 1 ¼ inch or greater)	Per Plans	-30% of Target Thickness	+30% of Target Thickness

COMPENSATION

460.90: Method of Measurement

A. Patching.

HMA for Patching will be measured for payment by the ton and shall be the actual quantity complete, in place and accepted by the Engineer.

B. Tack Coat.

Asphalt Emulsion for Tack Coat, as required by the plans or these specifications, will be measured by the gallon.

C. Joint Adhesive.

HMA Joint Adhesive used for sealing all longitudinal joints and transverse joints in HMA pavement courses will be measured by the foot.

D. Hot Mix Asphalt.

Hot Mix Asphalt pavement course mixtures will be measured by the ton and shall be the actual pavement course quantity complete, in place and accepted by the Engineer. The quantity shall be determined only by weight slips that have been properly countersigned by the Engineer.

E. Sweeping of Underlying Surface.

Sweeping of the Underlying Surface prior to paving, as required by the plans or these specifications, will be measured by the hour.

F. Material Transfer Vehicle.

A Material Transfer Vehicle, as required by the plans or these specifications, will be measured by the ton.

460.91: Basis of Payment

A. Patching.

HMA for Patching will be paid for at the contract unit price per ton of the HMA mixture type specified under Pay Item 451. Payment shall include all sawcutting, removal of existing distressed or unsound pavement, applying hot applied pavement joint adhesive to vertical faces, applying the tack coat to all required surfaces at the specified rate in accordance with 460.43: Preparation of Underlying Surface, Part G, and transportation, delivery, placement, and compaction of HMA for Patching in accordance with 460.43: Preparation of Underlying Surface, Part C.

B. Tack Coat.

Asphalt Emulsion for Tack Coat will be paid for at the contract unit price per gallon of applied tack coat under Pay Item 452. Payment shall include sweeping existing surfaces and applying the tack coat to all required surfaces at the specified rate in accordance with 460.43: Preparation of Underlying Surface, Part G.

C. Joint Adhesive.

HMA Joint Adhesive will be paid for at the contract unit price per foot of joint sealed under Pay Item 453. Payment shall include application of the joint adhesive to all longitudinal joints and transverse joints in HMA pavement courses as required and in accordance with 460.49: Hot Mix Asphalt Joints.

D. Hot Mix Asphalt Pavement.

Each HMA pavement course will be paid for at the contract unit price per ton of in-place mixture under the HMA Pay Items specified. Payment shall include transportation, delivery, placement, and compaction of each HMA pavement course in accordance with 460.43: Preparation of Underlying Surface through 460.51: Opening to Traffic. Mobile lighting for nighttime milling and paving, in accordance with 460.47: Hot Mix Asphalt Placement, Part C, is considered incidental to the cost of each HMA pavement course placed.

All sawcutting required for transverse joints or longitudinal joints in accordance with 460.49: Hot Mix Asphalt Joints shall also be included in the contract unit price for each HMA pavement course. All required sawcutting in the existing pavement in accordance with this specification will be included in the contract unit price for each HMA pavement course.

E. Contractor Quality Control.

The Contractor's QC system will be considered incidental to the work and shall be included in the Contract unit price for each HMA pavement course. No separate payment will be made for any assistance provided by the Contractor to the Engineer in obtaining Acceptance samples. Failure of the Contractor to perform adequate QC in accordance with the specifications and the Contractor’s approved QC Plan will be justification for withholding payment.

F. Sweeping of Underlying Surface

Sweeping of Underlying Surface will be paid for at the contract unit price per hour under Pay Item 460.90. Payment shall include sweeping existing surfaces prior to paving in accordance with 460.43: Preparation of Underlying Surface, Part F.

G. Material Transfer Vehicle.

The Material Transfer Vehicle will be paid for at the contract unit price per ton under Pay Item 460.91. Payment shall include the use of a material transfer vehicle during paving operations in accordance with 460.47: Hot Mix Asphalt Placement, Part A.

All respective items listed under 460.93: Payment Items shall be bid separately.

460.93: Payment Items

460.22	SUPERPAVE Surface Course - 9.5 (SSC - 9.5)	Ton
460.221	SUPERPAVE Surface Course - 9.5 - Polymer (SSC - 9.5 - P)	Ton
460.23	SUPERPAVE Surface Course - 12.5 (SSC - 12.5)	Ton
460.231	SUPERPAVE Surface Course - 12.5 - Polymer (SSC - 12.5 - P)	Ton
460.31	SUPERPAVE Intermediate Course - 12.5 (SIC - 12.5)	Ton
460.32	SUPERPAVE Intermediate Course - 19.0 (SIC - 19.0)	Ton
460.42	SUPERPAVE Base Course - 37.5 (SBC - 37.5)	Ton
460.51	SUPERPAVE Leveling Course - 4.75 (SLC - 4.75)	Ton
460.52	SUPERPAVE Leveling Course - 9.5 (SLC - 9.5)	Ton
460.53	SUPERPAVE Leveling Course - 12.5 (SLC - 12.5)	Ton
460.90	Sweeping of Underlying Surface	Hour
460.91	Material Transfer Vehicle	Ton

SUBSECTION 466: STRESS ABSORBING MEMBRANE & STRESS ABSORBING MEMBRANE INTERLAYER

DESCRIPTION

466.20: General

This specification covers requirements for materials, manufacture, and application of asphalt rubber stress absorbing membrane (SAM) or a stress absorbing membrane interlayer (SAMI). This work shall consist of an application of a combined reacted mixture of hot paving grade asphalt and ground rubber followed immediately with a cover material.

MATERIALS

466.30: General

Materials shall meet the requirements in the following Subsections of Division III, Materials and as otherwise specified herein:

Performance Graded Asphalt Binder M3.01.0
Stress Absorbing Membrane & Stress Absorbing Membrane Interlayer M3.10.2

A minimum of 30 days prior to construction the Contractor shall send a representative sample of the asphalt binder and the aggregate proposed for use to the asphalt-rubber binder Supplier for testing. Testing for stripping and asphalt content to determine and assure that appropriate characteristics are achieved when blended with the granulated rubber will be performed. The Contractor shall ensure that the selected asphaltic materials are compatible with the aggregate to be used.

At least 30 days before its intended use, the Contractor shall furnish to the Engineer samples of the asphalt-rubber binder and aggregate proposed for use on the project. The binder sample shall consist of 1 quart size can of the asphalt-rubber binder, together with the formulation and identification of the base PG binder used.

CONSTRUCTION PROCEDURES

466.40: General

Stress absorbing membrane and stress absorbing membrane interlayer shall be constructed as specified herein.

466.42: Weather Limitations

Construction shall not proceed when the ambient temperature has been below 50°F within the previous 12 hours, when rain is falling, or when conditions are unfavorable to obtaining a uniform spread. When acting as the final surface, SAMs shall not be applied after September 15th and before May 15th.

SAM/SAMI shall only be placed on dry, unfrozen surfaces and only when the temperature requirements are met. If the temperature requirements are not met at any point throughout the work shift, SAM/SAMI placement shall cease, except as determined and directed in writing by the Engineer depending upon the necessity and emergency of attendant conditions, and weather conditions.

The Contractor shall supply the Engineer with 2 approved dial type thermometers with a temperature range of -50°F to 500°F and 2 infrared pistol thermometer for each paving machine in operation on the project. The infrared pistol thermometers shall read in Fahrenheit and conform to the following requirements:

- Portable and battery operated
- LCD Display to nearest 1°F
- Temperature operating range of 0°F to 750°F
- Accuracy of ± 2%
- Repeatability of +/- 5°F
- Emissivity preset at 0.95

The thermometers will remain the property of the Contractor upon completion of the project.

466.43: Preparation of Underlying Surface

Prior to application of the rubberized asphalt, the entire paved surface to be treated shall be cleaned by sweeping or other methods until free of dirt and loose particles. The Contractor shall remove any epoxy, thermoplastic, preformed tape, or high built waterborne pavement markings. Other markings shall be removed as ordered by the Engineer.

Potholes, depressions, and other irregularities will be patched with hot mix asphalt and compacted. Cracks larger than ¼ in. shall be cleaned and filled with hot applied asphalt crack sealer. No water shall be present on the surface. A leveling course shall be placed on planed, milled, or existing surface, if required.

All manhole covers, water boxes, catch basins, and other such utility structures within the area being treated shall be covered with plastic, building felt, or other material approved by the Engineer. The cover material shall be removed at the end of each day.

466.44: Equipment

A. Distributer Truck.

A pressure distributor shall be equipped with the following to control and monitor the application:

- An internal heating device capable of heating the material evenly up to 425°F.
- An internal mixing unit capable of maintaining a proper mixture of asphalt binder and granulated rubber.
- Have adequate pump capacity to maintain a high rate of circulation in the tank and to spray the asphalt-rubber at the required spray rate.
- Have adequate pressure devices and suitable manifolds to provide constant positive cut-off to prevent dripping from the nozzles.
- An electronically controlled computerized compensation unit for controlling application rates at various width and speed changes.
- A fully circulating distribution bar.
- An asphaltic material sampling valve.

Distributor equipment shall include a tachometer, pressure gauges, volume measuring devices, and a thermometer for reading temperature of tank contents. Controls for the spray bar shall be located in the cab of the truck, for controlling width and rate of spray of product. It shall be constructed so that uniform applications may be made at the specified rate per square yard with a tolerance of ±0.05 gallons per square yard.

At least once every 12 months the application rate of the distributor system shall be calibrated by the Contractor using the appropriate spray bar nozzle size(s). The calibration shall be in the transverse and longitudinal directions following ASTM D2995. The calibration shall address the spray bar height, nozzle angle, spray bar pressure, thermometers, and strapping stick. Documentation of the annual calibration shall be kept with the distributor system and shall be provided to the Engineer when requested.

Any distributor that produces a streaked or irregular distribution of the material shall be promptly repaired or removed from the project.

On projects exceeding 35 tons of liquid asphalt-rubber, at least two distributor trucks in good condition will be required.

B. Hauling Equipment.

Trucks for hauling cover material shall be rear discharge conveyor-fed or "live bottom" trucks and shall be equipped with a device to lock onto the hitch at the rear of the chip spreader to prevent aggregate spillage.

Sufficient hauling vehicles will be available to ensure continuous operation of the distributor and chip spreader.

C. Aggregate Spreader.

The aggregate spreader shall be hydrostatically driven and self-propelled. It must be equipped with a hydraulically controlled variable adjustable head that is capable of spreading stone in widths from 4.5 to 18 ft. The spreader shall be mounted on pneumatic tires, and shall apply the stone on the road surface in a manner that ensures that the tires do not contact the road surface until after the stone has been applied.

The unit shall be equipped with an electronic radar type sensor used to measure ground speed and will automatically adjust the stone application rate depending on width of application and the speed of chip spreader. It shall have the ability to apply stone on any grade from 0 - 6%.

The spreader shall be equipped with an integral hopper with a minimum capacity of 5 tons of stone which shall be filled by trucks in a manner which ensures that the truck tires never come in contact with asphalt treated road surfaces until the stone has been properly applied. To maintain constant stone application, a self-locking truck hitch will permit towing of aggregate trucks without stopping the chip spreader. It will be capable of maintaining positive engagement over irregular terrain.

D. Pneumatic-Tire Roller.

A minimum of 2 self-propelled, multiple wheel, pneumatic-tired rollers shall be used and shall weigh between 7 and 12 tons and shall have a total compacting width of at least 56 in. The pneumatic roller tires shall either be foam filled or have a minimum tire pressure of 60 psi.

E. Steel-Wheel Roller.

A minimum of 1 self-propelled, 2-axle (tandem) steel-wheel roller shall be used and shall weigh between 8 and 12 tons and be equipped with scrapers, wetting pads, and watering system.

Combination pneumatic and steel drum-type rollers are acceptable, as one unit only.

F. Sweeper.

A minimum of 2 self-propelled rotary pick-up sweepers shall be used. They shall be designed, maintained, equipped, and operated so that the pavement surface can be swept clean. The rotary sweepers shall be equipped with adjustable down pressure on the sweeper heads and shall be capable of temporarily storing the picked-up material from the surface of the pavement for disposal offsite.

466.45: Asphalt Rubber Application

Asphalt-rubber material shall be applied in a uniform, continuous spread over the section to be treated and within the required temperature range. The distributor shall be moving forward at proper application speed at the time the spray bar is opened. If any skipped areas or deficiencies occur, the operation shall be immediately stopped. The asphalt-rubber shall not be applied more than 200 ft in advance of the aggregate spreader.

The asphalt-rubber mixture shall be applied at a temperature of 338°F to 400°F and a rate of 0.50 to 0.65 gallons per square yard. Exact application rate shall be determined by the aggregate gradation, traffic volume, and pavement condition and agreed upon by the Contractor and Engineer.

Longitudinal joints shall be reasonably true to line and parallel to the centerline. Where any construction joint occurs, the edges shall be broomed back and blended so there are no gaps, and the elevations are the same and free from ridges and depressions. Longitudinal joints shall be overlapped by 4 to 6 in.

Uncovered asphalt-rubber material shall not be exposed to traffic. All asphalt-rubber must be covered before opening to traffic.

During application, adequate provision shall be made to prevent marring and discoloration of adjacent pavements, structures, vehicles, foliage, or personal property.

466.46: Aggregate Application

The application of aggregate shall follow as close as possible behind the application of the hot asphalt-rubber. Construction equipment or other vehicles shall not drive on the uncovered asphalt-rubber. The hot pre-coated aggregate shall be spread uniformly by a self-propelled spreader at a rate of spread directed by the Engineer, generally between 30 to 40 pounds per square yard. Any deficient areas shall be covered with additional material.

466.47: Rolling

A minimum of 3 rollers shall be used for aggregate embedment into the hot asphalt-rubber. At least 2 of the rollers must be pneumatic-tired and one must be steel-wheel. Rolling shall commence immediately following spread of aggregate. There shall be at least three coverages by the pneumatic-tired roller to embed the aggregate particles firmly into the asphalt-rubber. Required coverage shall be as many passes that are necessary to cover the entire width being spread with a pass being one movement of a roller in either direction. Additional coverage of the steel-wheel roller will follow.

466.48: Sweeping

When the maximum amount of aggregate has been embedded into the asphalt-rubber and the pavement has cooled, all loose material shall be swept or otherwise removed. At a time and in a manner which will not displace any embedded aggregate or damage the asphalt-rubber. The material removed by sweeping shall be disposed of offsite.

Excess aggregate shall be swept from the newly treated surface after the surface has cured for at least 24 hours. Additional sweeping shall be performed as directed by the Engineer during a 5-day period following placement of the SAM/SAMI.

466.49: Opening to Traffic

The roadway shall be kept open to traffic at all times. Traffic shall be discontinued on the lane being chip sealed. After SAM/SAMI application, controlled traffic may be permitted at the Engineer's discretion. Traffic shall be maintained at a speed not to exceed 15 mph for a period of three hours after placement of the SAM/SAMI. Immediately after completion of the SAM/SAMI, the section shall be posted for a speed limit of 30 mph for a period of seven days.

CONTRACTOR QUALITY CONTROL

466.60: General

The Contractor shall provide a Quality Control (QC) system and a Quality Control Plan to ensure that all materials and workmanship meet the specification. The Contractor shall perform Quality Control inspection, sampling, testing, corrective action (when necessary), and documentation as outlined further below.

466.61: Contractor Quality Control Plan

The Contractor shall provide and maintain a detailed Quality Control Plan, hereinafter referred to as the "QC Plan." The QC Plan should sufficiently document the QC processes of all Contractor parties (i.e. Prime Contractor, Subcontractors, Producers) performing work required under this specification. The QC Plan is not intended to be a generic document, but rather must be project specific

A. QC Plan Submittal Requirements.

At the pre-construction meeting, the Contractor shall be prepared to discuss the Quality Control Plan. Information to be discussed shall include the proposed QC Plan submittal date, organization, and sources of materials. The Contractor shall submit 1 hard copy and 1 electronic copy of the QC Plan to the Engineer for approval not less than 30 days prior to the start of any work activities related to SAM/SAMI construction (including preparation of underlying surface). The Contractor shall not start work on the subject work items without an approved QC Plan.

B. QC Plan Format and Contents.

The QC Plan shall be structured to follow the format and section headings outlined in the MassDOT Model QC Plan. The pages of the QC Plan shall be sequentially numbered. The QC Plan shall address, in sufficient detail, the specific information requested under each section and subsection contained in the MassDOT Model QC Plan.

C. QC Plan Approval and Modifications.

Approval of the QC Plan will be based on the inclusion of the required information. Revisions to the QC Plan may be required prior to approval for any part of the QC Plan that is determined by the Department to be insufficient. Approval of the QC Plan does not imply any warranty by the Engineer that the QC Plan will result in completed work that complies with the specifications. It remains the responsibility of the Contractor to demonstrate such compliance. The Contractor may modify the QC Plan as work progresses when circumstances necessitate changes in personnel, laboratories, or procedures. In such case, the Contractor shall submit an amended QC Plan to the Department for approval a minimum of three calendar days prior to the proposed changes being implemented.

466.62: Quality Control Inspection

The Contractor shall perform Quality Control inspection of all work items addressed under this specification. Inspection activities during production and placement may be performed by qualified Production personnel (e.g., Skilled Laborers, Foremen, and Superintendents). The Contractor shall not rely on the results of Department Acceptance inspection for Quality Control purposes. The Engineer shall be provided the opportunity to monitor and witness all QC inspection.

Quality Control inspection activities must address the following four primary components:

- Equipment
- Materials
- Environmental Conditions
- Workmanship

The minimum frequency of Quality Control inspection activity shall be in accordance with the requirements below and as outlined in the approved QC Plan. The results and findings of QC inspection shall be documented on Inspection Report Forms (IRFs).

Table 466.62-1 - Minimum QC Inspection

Inspection Component	Inspection Attribute	Minimum Inspection Frequency	Point of Inspection	Inspection Method
Equipment	Per QC Plan	Per QC Plan	Per QC Plan	Per QC Plan
Materials	Asphalt-Rubber (Correct Type)	Per QC Plan	Per QC Plan	Check Manufacturer COC
	Temperature of Asphalt Rubber	(See Note 1)	From Distributor System	Check Measurement
	Aggregates (Correct Type)	Per QC Plan	Per QC Plan	Visual Check
Environmental Conditions	Underlying Surface Soundness & Moisture	Per QC Plan	Underlying Surface	Visual Check
	Temperature of Air & Underlying Surface	1 per Day (See Note 2)	At Placement Site	Check Measurement
Workmanship	Asphalt-Rubber Application Rate	(See Note 1)	From Distributor System	Check Measurement
	Aggregate Application Rate	(See Note 1)	From Spreader System	Check Measurement
	Loose Aggregate	Per QC Plan	At Placement Site	Visual Check

1. The Asphalt Rubber Temperature and Application Rate shall be checked as follows:
   - After application of the first 1,000 lane-feet.
   - After application of the next 1,500 lane-feet.
   - After application of the next 2,500 lane-feet.

   Thereafter, a minimum of once per 5,000 lane-feet each day.
2. At a minimum, the temperature measurements of the air and underlying surface shall be obtained prior to starting the SAM/SAMI placement.

466.63: Quality Control Documentation

PG Asphalt Binder testing shall be performed by the PGAB Supplier in accordance with AASHTO R 26 and the Supplier's approved PGAB Quality Control Plan. The Contractor shall submit to the Engineer the Supplier's Certificate of Compliance (COC) along with copies of the Certificate of Analysis (COA) showing the certified test results for each Supplier Lot of PGAB. A copy of the COA and a copy of all Bill of Ladings for the Lot of PGAB being used shall be submitted to the Engineer. For the crumb rubber modified asphalt binder the Contractor shall submit the COC, COA, and Bill of Ladings for the virgin unmodified binder. The Contractor shall also provide the COC and Bill of Ladings for the crumb rubber and documentation that it was added to the virgin binder at the required dosage.

QC Inspection Documentation & Evaluation.

The Contractor shall document all QC inspection activities. All inspection results shall be recorded within 24 hours of inspection on Inspection Report Forms (IRFs). The Contractor shall evaluate inspection results in a timely manner to confirm that production and placement processes are in control. The Contractor shall submit hard copies of all IRFs to the Engineer at the completion of the work.

466.64: Corrective Action

As part of the Contractor's Quality Control system, the Contractor shall implement corrective action for any work that is determined by inspection to not be in conformance with the requirements specified in this specification. If the results of QC inspection identify nonconforming material or workmanship, the Contractor shall isolate the material in question and perform additional inspection or testing to further assess the quality. Selective inspection should be used to determine the limits of non-conformance.

Based on the results of additional inspection or testing, the Contractor shall prepare a plan of corrective action for the nonconforming material. The corrective action plan shall be submitted to and approved by the Engineer prior to initiating corrective action. All corrective action shall be performed at the Contractor's expense.

466.65: Quality Control Records System

A. Quality Control Daily Diary.

The Contractor should maintain a QC Daily Diary to document all major activities or actions related to the Contractor's QC system. The QC Daily Diary serves as a summary record of key actions taken by QC personnel each day. Recommended Information which should be recorded in the QC Daily Diary includes:

- The day's weather or environmental conditions.
- A summary of placement activities completed.
- Any non-conforming material or workmanship identified.
- Any corrective actions recommended or taken by QC personnel.
- Discussions held with other Contractor personnel or Department personnel.
- Visitors to the field placement operation.

B. Quality Control Record Books.

The Contractor shall maintain one or more ringed binders referred to as QC Record Books to store all required QC documents.

QC documents to be stored in the QC Record Book(s) include:

- A signed copy of the current approved QC Plan.
- The original signed copies of all completed Inspection Report Forms.
- Summary sheets of material quantities placed.

Each required record shall be inserted into the corresponding QC Record Book within 24 hours after the document has been completed. All QC Record Books shall be maintained in a suitable

location. The Engineer shall be provided access to all QC Record Books as part of the Department's monitoring of Contractor QC activity.

C. Quality Control Records Retention.

All Contractor QC records identified above shall be retained for a minimum of 7 years. The records shall be protected from damage or alteration. When requested by any State or Federal Agency for audit or similar purposes, the Contractor shall provide complete access to all QC records.

D. Failure to Provide Quality Control Records

The Contractor shall provide the Engineer with requested QC records within 48 hours of the request.

DEPARTMENT ACCEPTANCE

466.70: General

The Department is responsible for performing all Acceptance activities and making the final Acceptance determination. The Department's Acceptance system will include monitoring the Contractor's QC activity and performing Acceptance inspection, sampling, and testing in order to determine the Quality and corresponding payment.

466.71: Acceptance System Approach

The Engineer's Acceptance determination will be based only on the Department's Acceptance inspection information and Acceptance testing data.

466.72: Department Monitoring of Contractor Quality Control

The Department will monitor the Contractor's Quality Control system to confirm that QC activities are being performed in compliance with this specification and the approved QC Plan. Department monitoring of the Contractor's QC system is not intended to evaluate the quality of the work. The Engineer will not perform the QC responsibilities of the Contractor or provide constant direction to the Contractor on how to perform Quality Control. The Engineer's monitoring of QC activity will include the following:

- Periodic visual observation of QC inspection, sampling, and testing.
- Reviewing QC documentation and records.
- Providing feedback based on monitoring findings.

466.73: Acceptance Inspection

The Engineer will perform Acceptance inspection of all work items addressed under this specification to ensure that all materials and completed work are in conformance with the contract requirements. Acceptance inspection is intended to visually assess the quality of each HMA Lot produced and placed and will address only the inspection components of Materials and Workmanship in support of the Department's final acceptance determination. All Acceptance inspection activity by the Department will be performed independent of the Contractor's QC inspection.

Table 466.73-1 – Department Acceptance Inspection

Inspection Component	Inspection Attribute	Minimum Inspection Frequency	Point of Inspection	Inspection Method
Materials	Asphalt-Rubber (Correct Type)	1 per Day	At Placement Site	Check Manufacturer COC
	Aggregates (Correct Type)	1 per Day	At Placement Site	Check Delivery Ticket
Workmanship	Asphalt-Rubber Application Rate	Once per 2,500 lane-ft	From Distributor System	Visual Check & Check Measurement
	Aggregate Application Rate	Once per 2,500 lane-ft	From Spreader System	Visual Check & Check Measurement
	Loose Aggregate	Once per 2,500 lane-ft	At Placement Site	Visual Check

466.74: Acceptance Sampling & Testing

A. Random Sampling.

The Department will utilize stratified random sampling to determine the overall quality of SAM/SAMI placed. Random Acceptance sample locations will be determined by the Engineer in accordance with ASTM D3665 or by electronic random number generator, as presented by NETTCP.

B. Selective Sampling.

The Department will utilize selective sampling (i.e. non-random samples) as needed to provide supplemental information to assist in quantifying the quality of apparent nonconforming material.

C. Contractor Assistance in Obtaining Acceptance Samples.

The Engineer will obtain all material samples for Acceptance testing by the Department. When requested by the Department, the Contractor shall assist the Engineer in obtaining Acceptance samples in accordance with the following requirements:

- The Acceptance sample location and time will be randomly selected by the Engineer and provided to the Contractor immediately prior to sampling.
- The Contractor's qualified personnel will only provide the physical labor to assist the Engineer in obtaining the Acceptance sample.
- The Engineer will be present to direct and monitor the taking of the sample.
- The Engineer will take immediate possession of the Acceptance sample.

Contractor assistance may be requested in obtaining Acceptance samples (random or selective) for PG Asphalt Binder Grading.

D. Acceptance Testing of HMA Lots.

The Department will perform Acceptance testing using the random samples obtained at the site of SAM/SAMI placement.

E. PG Asphalt Binder Grading.

The Department will review the Supplier's Bill of Lading (BOL) submitted by the Contractor along with the Certificate of Compliance (COC) and Certificate of Analysis (COA) showing the corresponding certified test results for each Supplier Lot of PGAB. The Engineer will also obtain and test a minimum of one random Acceptance sample of asphalt-rubber binder for every 30,000 gallons placed to determine conformance with the applicable binder grade specification. A minimum of one 1-quart container of PGAB will be obtained for each Acceptance sample from the distributor tank. All asphalt-rubber Acceptance samples will be split prior to testing and the un-tested portion of the sample will be retained for a minimum of 30 days.

466.75: Lot Acceptance Determination

The Department's Acceptance inspection and testing results will be used in the final acceptance determination. Prior to final acceptance, the Department will periodically evaluate all Acceptance inspection and testing information for the prepared underlying surface and the SAM/SAMI placement. The materials and product workmanship for the completed work will be evaluated for conformance with the plans and the requirements specified.

When the Acceptance information identifies deficiencies in either material quality or product workmanship for any underlying surface location or SAM/SAMI placement, the location or material will be isolated and further evaluated by the Engineer through additional Acceptance inspection. Depending upon the findings of the additional Acceptance inspection activity, the Engineer will determine the disposition of the nonconforming work in accordance with Subsection 5.03: Conformity with Plans and Specifications.

After the work is completed, including any corrective action, the Engineer will evaluate all Acceptance inspection and testing information. The Department will accept the subject work if the Engineer's evaluation of all inspection and testing information indicates that the corresponding materials and product workmanship meet the specified requirements.

COMPENSATION

466.90: Method of Measurement

A. SAM or SAMI.

Stress Absorbing Membrane or Stress Absorbing Membrane Interlayer will be measured by the square yard and shall be the actual number of square yards applied. Price per square yard shall be full compensation for all labor, materials, and equipment required completing the work in accordance with these specifications.

B. Other Work.

- HMA for leveling will be measured by the ton.
- HMA for patching will measured by the ton.
- When HMA for leveling is used the asphalt emulsion for tack coat will be measured by the gallon.
- Crack filling will be measured by the gallon.

466.91: Basis of Payment

SAM and SAMI shall be paid at the contract unit price per square yard and payment shall be full compensation for all labor, materials, and equipment required to complete the work to the satisfaction of the Engineer.

HMA for leveling will be paid for at the contract unit price per ton under Items 450.51, 450.52, or 450.53 Superpave Leveling Course.

HMA for patching will be paid for at the contract unit price per ton under Item 451. HMA for Patching.

When HMA for leveling is used the asphalt emulsion for tack coat will be paid for at the contract unit price per gallon under Item 452. Asphalt Emulsion for Tack Coat.

Crack filling will be paid for at the contract unit price per gallon under Item 480.2 Pavement Crack Sealing - High Performance Crack Sealer.

466.92: Payment Items

466.1 Stress Absorbing Membrane Interlayer – ⅜ Inch ..... Square Yard
466.2 Stress Absorbing Membrane – ⅜ Inch ..... Square Yard
466.3 Stress Absorbing Membrane – ½ Inch ..... Square Yard

SUBSECTION 470: HOT MIX ASPHALT BERM

DESCRIPTION

470.20: General

The work under this section shall consist of placing HMA berm in accordance with the contract details shown on the plans. The work shall be at locations shown on the plans, or as directed.

MATERIALS

470.30: General

HMA berm materials shall meet the requirements of the following subsections of Section M3: Asphaltic Materials:

Asphalt Release Agents M3.01.6
Hot Mix Asphalt for Driveways, Sidewalks, Berm, and Curb M3.07.0
Hot Mix Asphalt Production Facility M3.12.0

CONSTRUCTION PROCEDURES

470.40: General

The Contractor shall obtain HMA berm material of the type specified.

470.41: Underlying Surface

The underlying surface for HMA berms shall be as shown on the plans, or as directed.

470.42: Paving of Hot Mix Asphalt Berm

The HMA berm mixture shall be placed and compacted by a mechanical paver or berm machine. The berm shall be construction in accordance with the contract drawings.

CONTRACTOR QUALITY CONTROL

470.60: General

The Contractor shall provide QC activities to ensure that their processes for berm operations will provide berm that conforms to the specified material and workmanship requirements.

470.61: HMA Berm Materials and Workmanship

The Contractor shall verify that they are using the correct HMA berm materials as specified under 470.30: General. All berm shall exhibit satisfactory workmanship, including: cleaning loose material and debris, compacting to a satisfactory density, and tying in fully with the surrounding pavement surface in order to provide a smooth transition.

DEPARTMENT ACCEPTANCE

470.70: General

The Department shall verify that the Contractor is correctly performing the work.

470.71: HMA Berm Materials and Workmanship

The Engineer will verify that the HMA berm materials and workmanship conform with 470.61: HMA Berm Materials and Workmanship.

COMPENSATION

470.80: Method of Measurement

Hot Mix Asphalt Berm will be measured for payment by the ton and shall be the actual quantity complete in place and accepted by the Engineer.

470.81: Basis of Payment

Hot Mix Asphalt Berm will be paid for at the contract unit price per ton, which shall include sweeping the underlying surface, transportation, delivery, placement, and compaction.

470.82: Payment Items

470. Hot Mix Asphalt Berm ..... Ton

SUBSECTION 472: TEMPORARY ASPHALT PATCHING

DESCRIPTION

472.20: General

The work under this section shall consist of placing and removing temporary asphaltic material for use as curbing, berm, sidewalk, roadway patches, temporary transition ramps, or other incidental work performed primarily by hand methods. This work may also include emergency pothole repair and filling in milled rumble strips. Permanent pothole repair shall be performed in accordance with Item 451 HMA for Patching.

The work shall be at locations shown on the plans or as directed by the Engineer, except that Item 472 shall not be used when the work is to be permanent or is included under other items in the contract.

MATERIALS

472.30: General

Temporary patching materials shall meet the patching requirements of Subsection 450: Hot Mix Asphalt Pavement and Subsection 460: Hot Mix Asphalt Pavement for Local Streets, except if hot mix asphalt is not available, the Contractor shall use approved cold patch material. Temporary patching material shall meet the requirements of the following subsections of Division III, Asphaltic Materials:

Performance Graded Asphalt Binder M3.01.0
Warm Mix Asphalt M3.01.4
Asphalt Anti-Stripping Additive M3.01.5
Asphalt Release Agents M3.01.6
Asphalt Emulsion for Tack Coat M3.03.0
Hot Mix Asphalt M3.06.0
Cold Patch for Temporary Patching M3.08.0
Hot Mix Asphalt Production Facility M3.12.0

CONSTRUCTION PROCEDURES

472.40: General

The Contractor shall obtain asphalt patching material of the type specified. The work shall meet the patching requirements of Subsection 450: Hot Mix Asphalt Pavement or Subsection 460: Hot Mix Asphalt Pavement for Local Streets, as specified in the contract, but will not require formal QC Inspection and Testing. The Engineer may waive specific requirements of 450.43: Preparation of Underlying Surface, Part C or 460.43: Preparation of Underlying Surface, Part C depending on the application in which the temporary patching material will be used.

Existing patching material shall be completely removed before a temporary surface is placed. The placement of asphalt patching materials is intended to be primarily by hand methods.

Temporary patching materials shall be placed to the required thickness and sufficiently compacted.

CONTRACTOR QUALITY CONTROL

472.60: General

The Contractor shall provide QC activities to ensure that their processes for patching operations will provide temporary patching that conforms to the specified material and workmanship requirements.

472.61: Patching Materials and Workmanship

The Contractor shall verify that they are using the correct patching materials as specified under 472.30: General. All patches shall exhibit satisfactory workmanship including; cleaning loose material and debris, compacting to a satisfactory density, and tying in fully with the surrounding pavement surface in order to provide a smooth transition.

DEPARTMENT ACCEPTANCE

472.70: General

The Department shall verify that the Contractor is correctly performing the work and QC.

472.71: Patching Materials and Workmanship

The Engineer will verify that the patching materials and workmanship conform with 472.61: Patching Materials and Workmanship.

COMPENSATION

472.80: Method of Measurement

Temporary Asphalt Patching will be measured for payment by the ton and shall be the actual quantity complete, in place and accepted by the Engineer.

472.81: Basis of Payment

Temporary Asphalt Patching will be paid for at the contract unit price per ton complete in place. When required, removal and disposal of temporary material shall be included in the contract unit price. Payment shall include all sawcutting, removal of existing distressed or unsound pavement, and transportation, delivery, placement, and compaction of HMA.

472.82: Payment Items

472. Temporary Asphalt Patching .....Ton

SUBSECTION 476: CEMENT CONCRETE PAVEMENT

DESCRIPTION

476.20: General

This work shall consist of a pavement composed of air entrained Portland cement concrete, plain or reinforced as specified, constructed on an approved foundation in accordance with these

specifications and in close conformity with the lines, grades, thicknesses, and typical cross sections shown on the Plans or established by the Engineer.

MATERIALS

476.40: General

Materials shall meet the requirements of the following Subsections of Division III, Materials:

- Concrete, (Air Entrained) 5,000 psi, 1.5-inch, 660 ..... M4.02.00
- Scored Concrete Pavement-Air Entrained-5,000 psi, ¾-inch, 705 ..... M4.02.00
- Steel Reinforcement
  - Reinforcing Bars M8.01.0
  - Welded Steel Fabric M8.01.2
  - Steel Bar Mats M8.01.3
  - Tie Bars and Bolts M8.01.4
- Load Transfer Assembly M8.14.0
- Preformed Joint Filler M9.14.0
- Preformed Bituminous Joint Filler for Concrete M3.05.5
- Polyurethane Joint Sealer M9.14.3
- Asphaltic Paint RS-1h M3.03.0
- Curing Materials
  - Impervious Liquid Membrane M9.06.5
  - Waterproof Paper M9.06.0
  - Burlap M9.06.3
  - Polyethylene Coated Burlap M9.06.4
  - White Polyethylene ..... M9.06.1, Part B
- Base Stabilization Materials
  - Portland Cement M4.01.0
  - Bitumen M3.02.0

Fine aggregate for use in concrete to be placed with a slip-form paver shall meet the grading requirements as specified for fine aggregate for cement concrete except that the maximum passing the #100 sieve may be increased to 10% and a maximum of 4% passing the #200 sieve may be established in order to increase the cohesiveness of the cement concrete. Also, the concrete when tested in accordance with AASHTO Designation T 119M/T 119 shall have a slump of not more than 2 in. nor less than 1 in.

CONSTRUCTION METHODS

476.60: General

The cement concrete pavement may be constructed by the Slip-Form Method or the Fixed-Form Method. Equipment and tools necessary for handling materials and performing all parts of the work shall be approved by the Engineer as to design, capacity, and mechanical condition. The equipment shall be at the job site sufficiently ahead of the start of construction operations to be examined thoroughly and approved. Any equipment or tools which are not maintained in full working order or which, as used by the Contractor, prove inadequate to obtain the results prescribed, shall be improved or new equipment or tools substituted or added as directed.

Grade control survey and staking shall conform to Subsection 5.07: Construction Survey Control. The Contractor shall furnish, set, and maintain all line and grade stakes for grading and paving.

476.61: Preparation of Grade

The sub-base shall consist of gravel or dense graded crushed stone conforming to Subsection 401: Gravel Sub-Base or Subsection 402: Dense Graded Crushed Stone for Sub-Base, or of soil cement, and shall be as specified on the plans. The sub-base shall be conditioned and perfected not less than 500 ft in advance of the placing of the concrete. If any traffic is allowed to use the prepared grade, the grade shall be checked and corrected immediately ahead of the placing of the concrete.

Sub-base prepared for the slip-form method shall be placed to a compacted depth approximately 1 in. higher than the grade called for on the plans to allow for planing by approved mechanical means to the proper profile. It shall also be placed to a width 3 ft greater (18 in. on each side) than the required pavement slab width. After the sub-base has been placed and compacted to the required density, and will adequately support the subgrade machine and the slip-form paver, the track areas shall be cut to the proper elevation by the use of a mechanical form grading machine.

Behind the form grading machine the track areas shall be rolled to a smooth, firm, and uniform surface.

The grade on which the pavement is to be constructed shall then be brought to the proper profile by means of a track mounted subgrade machine operation on the prepared track line or by other mechanical means approved by the Engineer. When concrete is placed, the surface of the sub-base shall not be above, nor more than ¾ in. below the plan subgrade elevation. If the density of the subgrade is disturbed by the subgrade machine, it shall be corrected by additional compaction before concrete is placed.

The sub-base, after being conditioned, shall provide a firm unyielding support which will not be displaced under the movement of the paver. If the sub-base is displaced by the movement of the paver to the extent that the finished pavement will be affected, the two areas that will support the slip-form paver tracks shall be stabilized as provided herein. The areas to be stabilized will be immediately outside the edge lines of the pavement slab on both sides and are each to be not less than 18 in. in width, measured from the exterior edges of the proposed pavement slab.

If cement is used for stabilization, the material to be stabilized shall be loosened and pulverized before any cement is added. Cement shall be uniformly spread on the loosened and pulverized material at the rate of approximately 4.5 psf. The final depth of stabilization shall be not less than 3.5 in. in the completed track area after it is brought to proper elevation. The exact amount of cement to be used to adequately harden the mixture of cement and subgrade material will be determined by the Engineer.

The cement and subgrade material shall be thoroughly mixed by means of a power-driven mixer until the mixture is of a uniform color throughout the full required depth.

After the cement and subgrade material have been mixed, water shall be added to the mixture and mixing continued until the water is uniformly distributed throughout the mixture. The amount of water to be added will be determined by the Engineer. The moist mixture when ready for compaction shall be near its optimum moisture content.

The mixture shall be uniformly compacted for the full depth until it is firm and unyielding, and within 2 hours after the addition of the water. Compaction shall be with a 10-ton three wheeled or tandem roller, approved rubber-tired roller or approved mechanical vibrator.

After compaction, the surface of the area that will support the paver tracks shall be cut to true profile and elevation by approved mechanical equipment and then rolled to obtain a smooth, true surface.

The stabilization shall be protected from drying by the application of approved bituminous material (approximately 0.2 gallons per square yard) or cover of straw, sand or earth. If straw, sand or earth is used for cover, it must be broomed off before the area is used in further operations. The curing material shall be applied immediately after final rolling and maintained for at least 2 days.

In lieu of the above method and procedure for stabilization of the track area, other proven methods and materials will be considered subject to equivalent and acceptable performance.

Regardless of the method, materials and procedures used, the burden or responsibility for the acceptability of work shall rest with the Contractor.

If stabilization of the track areas is required such stabilization will not be paid for separately, but will be included under Item 476., Cement Concrete Pavement.

Where fixed-form construction is specified, the use of a subgrade machine may follow form setting.

When side forms have been securely set to grade, the sub-base shall be brought to proper cross section. The fine grading shall be compacted by means of approved equipment to a condition similar to that of surrounding grade. A sub-base check template shall be used as a final check. The surface of the sub-base shall not be above nor more than ⅜ in. below the plan sub-base elevation. Any deviation from the required sub-base surface exceeding this tolerance shall be corrected.

The template shall span the width being paved and be supported on the side forms. It may be power or hand operated, with scratch teeth or pins which can be adjusted readily to the required cross section and supported in a frame of sufficient weight and strength to withstand the loads. The points of the teeth or pins shall be adjusted to be at the plan sub-base elevation. High areas shall be trimmed to proper elevation. Low areas shall be filled and compacted to a condition similar to that of surrounding grade except that areas which are not more than ¾ in. below sub-base elevation may be filled with concrete integral with the pavement. The finished grade shall be maintained in a smooth and compacted condition until the pavement is placed.

The sub-base shall be uniformly moist when the concrete is placed. When the sub-base is dry, it shall be sprinkled with as much water as can be readily absorbed immediately in advance of placing concrete. It shall also have been similarly sprinkled not less than 8 hours or more than 24 hours before concrete is placed thereon.

476.62: Forms and Form Setting

Where fixed-form construction is specified, the straight side forms shall be made of metal and shall be furnished in sections not less than 10 ft in length. Forms shall have a depth equal to the prescribed edge thickness of the concrete without horizontal joint and a base width equal to the depth of the forms but not less than 8 in.. Flange braces shall extend outward on the base not less than two-thirds the height of the form. Flexible or curved forms of proper radius shall be used for

curves of 200-ft radius or less and be of a design acceptable to the Engineer. Satisfactory wooden forms, as approved by the Engineer, may be used for curves of 200-ft radius or less or where the design of pavement is such that metal forms cannot be used. Forms shall be provided with adequate devices for secure setting so that when in place they will withstand, without visible spring or settlement, the impact and vibration of the consolidating and finishing equipment. Forms with battered top surfaces and bent, twisted or broken forms shall be removed from the work. Repaired forms shall not be used until inspected and approved by the Engineer. The top face of the form shall not vary from a true plane by more than ⅛ in. in 10 ft, and the upstanding leg shall not vary from a true plane by more than ⅛ in. in 10 ft. The forms shall contain provisions for locking the ends of abutting form sections together tightly and for secure setting. Forms to be used for concrete which is to be furnished by hand shall have a base not less than 6 in. in width.

The foundation under the forms shall be hard and true to grade so that the form, when set, will be firmly in contact for its whole length and at the specified grade. Any grade which at the form line is found below established grade shall be filled to grade with granular material in lifts of ½ in. or less for a distance of 18 in. on each side of the base of the form, and thoroughly compacted. Imperfections or variations above grade shall be corrected by tamping or by cutting as necessary.

After the forms have been set to correct grade, the grade shall be thoroughly tamped, mechanically or by hand, at both the inside and outside edges of the base of the forms. Forms shall be joined neatly and tightly and staked securely with not less than 3 pins for each 10-ft section. A pin shall be placed at each side of every joint. Form sections shall be tightly locked free from play or movement in any direction. If any play or movement of the forms occurs, additional pins shall be required by the Engineer. The entire base of forms shall be directly in contact with the finished sub-base. If a form does not have satisfactory bearing area for its full length, it shall be removed, the bearing area of sub-base reshaped and compacted, and the form replaced. Building of pedestals of earth or other materials upon which to reset the forms in order to bring them to the required grade is not permitted. Forms shall be set at least 500 ft in advance of the point of placing concrete. They shall be thoroughly cleaned and greased or soaped before concrete is placed against them. No excessive settlement or springing of forms under the finishing machine will be tolerated.

The forms shall be set to correct line and grade. Smooth alignment and grade shall be checked by sighting and with an approved 10-ft straight edge. The alignment and grade elevations of the forms shall be checked and corrections made by the Contractor immediately before placing the concrete. When any form has been disturbed or any grade has become unstable, the form shall be reset and rechecked. Use of a straight-edge will not be required on vertical curves. A mechanical tamper of approved type and design will be permitted for use in the preparation of a firm, even sub-base for form installation.

476.63: Batching and Mixing Concrete

The materials shall be batched at a central plant. The batch plant site, layout, equipment, and provisions for transporting material shall be such as to assure a continuous operation of the paver employed on the project. The work shall be done in accordance with the relevant provisions of M4.02.08: Plant and Equipment.

Concrete may be mixed at the site of construction or at a central point. Mixers shall conform to the applicable requirements of M4.02.09: Mixers and Agitators.

Concrete mixed at a central plant shall be hauled to the paving site by agitation trucks or other approved haul units in accordance with the relevant provisions of M4.02.10: Mixing and Delivery.

Concrete mixed completely in truck mixers in accordance with M4.02.10: Mixing and Delivery, Paragraph A-1, may be allowed when approved by the Engineer.

The Contractor shall obtain approval of their proposed central mix plant site, its capacity, concrete materials sources, hauling equipment, proposed haul routes, etc. prior to moving said equipment onto project.

Concrete mixed in pavers at the site shall be mixed for a period of not less than 60 seconds including transfer time but no less than 50 seconds, exclusive of transfer time, but no less than 50 seconds, exclusive of transfer time, after all materials, except water, are in the drum. The mixer shall be operated at drum speed shown on the manufacturer's name plate. The manufacturer's guaranteed capacity of the mixer shall not be less than 27 ft^3. Except by written permission of the Engineer, the mixer shall not be operated in excess of its guaranteed capacity nor by more than IO% above its rated capacity as shown on the standard rating plate on the machine, when operating on grades not exceeding 6%.

The batch shall be so charged into the drum that a portion of the mixing water shall enter in advance of the cement and aggregates. The flow of water shall be uniform and all water shall be in the drum by the end of the first 20 seconds of the mixing period. The entire contents shall be removed from the drum before the succeeding batch is introduced. The inside of the drum shall be kept free from hardened concrete. The skip and throat of the mixer drum shall be kept clean and free of accumulation or encrustations of inert materials and the admission of these materials to the mixer shall be cause for rejection of the batch in which they are included. The concrete, as discharged from the mixer, shall be uniform in composition and consistency. If this condition is not produced with the maximum size of batch, the size of the batch shall be reduced or the mixing time increased, or both, until an acceptable mixture is obtained.

As required above, all materials except water shall be admitted to the mixer simultaneously and thereafter no additional amount of any ingredient shall be admitted to the mixer, except on specific instructions of the Engineer or their representative, for each individual batch. Such instructions shall not be given for more than three consecutive batches after which the proportions of the mix shall be correct prior to the initial charging of the mixer, and further, such instructions shall not relax the following restrictions concerning the retempering of concrete.

Retempering of concrete by the addition of water will not be permitted. The addition of water to the batch in the mixer after 10 minutes have elapsed after the initial charging, or the addition of water to the concrete after removal from the mixer, shall be construed as retempering. Batches of concrete prepared contrary to these restrictions shall be rejected and immediately removed from the site. The concrete shall be mixed only in the quantity required for immediate use and concrete not in place within 30 minutes from the time the ingredients were charged into the mixing drum, or that has developed initial set, shall not be used.

The concrete shall have a slump of between 1.5 and 3 in. if not vibrated, or between 1 and 2 in. if vibrated throughout, as measured in accordance with AASHTO Designation T 119M/T 119.

Batches shall be discharged in a manner to facilitate placing the concrete in its final position with a minimum of rehandling and without damage to forms, concrete previously placed, or other parts of the work.

The interval between loads shall be controlled in order that concrete in place will not become partially hardened prior to placing succeeding batches and in no case shall it exceed 30 minutes. Plant capacity and transportation facilities shall be sufficient to insure delivery of concrete at the rate required.

Samples of concrete for test and test specimens will be taken from transportation units at the point of discharge or from the concrete in place as determined by the Engineer.

When cement concrete paving operations are done during cold weather, the stipulations as outlined in 901.64: Protection from Adverse Weather shall apply.

476.64: Placing Concrete

Concrete shall be placed only on an approved sub-base.

The Contractor shall notify the Engineer at least 24 hours in advance of placing the concrete. In the event they desire to operate after the daylight hours, the Contractor shall provide a lighting system sufficiently adequate to illuminate all of the operations to the satisfaction of the Engineer.

No finishing of the concrete will be permitted after daylight hours unless an adequate and approved lighting system is provided by the Contractor and operated in a satisfactory manner. Approval of the lighting system by the Engineer must be obtained prior to its use.

At least 500 ft of foundation shall have been prepared ahead of the mixer or concrete operations at all times. The depositing of concrete on excessively wet subgrades or sub-bases or a frozen foundation will not be permitted. No concrete shall be placed around manholes or other structures until they have been installed to the required grade and alignment.

During dry weather, when traffic on the foundation or adjacent roadways would deposit wind-blown dust and dirt on the freshly placed concrete before it can be protected, the Contractor shall sprinkle the foundation or adjacent roadways with water or otherwise apply satisfactory treatment to keep down the dust.

All equipment used for mixing, hauling and placing the concrete shall be operated outside of the area being paved. Should operation of such equipment be permitted on the prepared foundation, suitable planks or platforms shall be provided and used for the equipment to run on, so that the foundation will be maintained in an approved condition.

The concrete shall be deposited on the grade in such a manner as to require as little handling as possible. Concrete shall be distributed in such a manner that when consolidated and finished, the slab thickness and surface grade required by the plans will be obtained at all points. Unless truck-mixers, truck-agitators, or non-agitating hauling equipment demonstrate that they will discharge concrete without segregation of the materials, the concrete shall be unloaded into an approved spreading device and mechanically spread on the grade in such a manner as to prevent segregation of the materials. Placing shall be continuous between transverse joints without the use of intermediate bulkheads except as specified under 476.68: Joints for construction joints. Necessary

hand spreading shall be done with shovels, not rakes. Workmen shall not be allowed to walk in the freshly mixed concrete with boots or shoes coated with earth or foreign substances.

The concrete shall be deposited carefully at and around contraction and expansion joints. It shall be shoveled against both sides of expansion joints simultaneously, maintaining equal pressure on both sides. Care shall be taken that the concrete is worked under all metal parts of the load transfer assemblies. The concrete shall not be dumped directly upon or against the joints in any manner which displaces the load transfer assemblies or joint material from the true position.

Should any concrete materials fall on or be worked into the surface of a completed slab, they shall be removed immediately by approved methods.

Where concrete is to be placed adjoining a previously constructed lane of pavement and mechanical equipment will be operated upon the existing lane of pavement, that lane may be opened to traffic when curing operations have been completed provided that beam tests show that the concrete has attained a modulus of rupture of at least 550 psi. Curing operations will not be considered completed unless a curing period of at least 7 days has elapsed since the concrete was placed. However, the pavement may be used at the end of 5 days if only rubber-tired finishing equipment is permitted to operate upon it and the concrete has attained a modulus of rupture of at least 550 psi.

When high early strength concrete is used, mechanical equipment may be operated upon the pavement after a shorter period of curing or as beam tests show that the concrete has attained a modulus of rupture of at least 550 psi.

Pavers will not be permitted to operate on the finished pavement.

Gaps in the pavement for crossovers will not be permitted. Should crossings be necessary, suitable bridging of slabs or sand cushioning will be provided, as approved by the Engineer.

476.65: Spreading and Strike-Off of Concrete

As soon as concrete has been placed on the sub-base, it shall be immediately struck-off accurately, by means of an approved mechanical spreading device, leaving a surface uniform in texture, true to grade, elevation and contour. The strike-off shall be so adjusted for elevation that when the concrete is consolidated, as herein designated, sufficient material remains above grade as is required for the final finished surface of the pavement.

When reinforced concrete pavement is placed in two layers, the entire width of the bottom layer shall be struck-off to such length and depth that the sheet of fabric or bar mat may be laid full length on the concrete in its final position without further manipulation. The reinforcement shall then be placed directly upon the concrete, after which the top layer of the concrete shall be placed, struck-off and screeded. Any portion of the bottom layer of concrete which has been placed more than 30 minutes without being covered with the top layer shall be removed and replaced with freshly mixed concrete at the Contractor's expense.

A. Slip-Form Method.

The slip-form paver shall be an approved machine designed to spread, consolidate, screed, and float finish the freshly placed concrete in one complete pass of the machine in such manner that a minimum of hand finish will be necessary to provide a dense and homogeneous pavement in conformance with the plans and specifications.

The slip-form paver shall be of the self-propelled type, equipped with crawler type tracks not less than 22 ft in length.

The machine shall vibrate the concrete for the full width and depth of the strip of pavement being placed. Such vibration shall be accomplished with vibrating tubes or arms working in the concrete or with a vibrating screed or pan operating on the surface of the concrete. The sliding forms shall be rigidly held together laterally to prevent spreading of the forms. The forms shall trail behind the paver for such a distance that no appreciable slumping of the concrete will occur, and that necessary final finishing can be accomplished while the concrete is still within the forms.

The slip-form paver shall be adjustable as to crown and super-elevation and shall shape and compact the concrete to the required cross section as shown on the plans. Such adjustments shall be readily controllable for accuracy in transitions. No tractive force shall be applied to the machine except that which is controlled from the machine.

The concrete shall be of uniform consistency such that there will be no appreciable slumping at the edge of the pavement after the slip-forms have passed. The following tolerances on edge slump shall apply: Edge slump, exclusive of edge rounding, shall not exceed ¼ in. within 6 in. of the edge at the extreme outside limits of the concrete pavement: at the longitudinal joint along the pavement crown and along the longitudinal joint between the travel lanes and speed change lanes. The edges along the longitudinal joint between the two travel lanes of the same cross-slope shall be at true finish grade. Any deviation from these tolerances shall be corrected while the concrete is plastic.

The slip-form paver shall be operated with as nearly a continuous forward movement as possible and all operations of mixing, delivering and spreading concrete shall be so coordinated as to provide uniform progress with stopping and starting of the paver held to a minimum. If, for any reason, it is necessary to stop the forward movement of the paver, the vibratory and tamping elements shall also be stopped immediately.

For reinforced pavement and where necessary, more than one machine and/or complimentary equipment will be allowed, subject to the Engineers approval.

B. Fixed-Form Method.

The spreading machine shall be mechanical, self-propelled, and of an approved type. It shall be capable of spreading the concrete evenly between the side forms, without segregation, and without introducing thrust on the side form. It shall be equipped with a spreading device, adjustable in height for distributing the concrete longitudinally and transversely, and a blade adjustable in height to strike-off the concrete at the required elevation above or below the top of the side form.

Immediately after the concrete has been struck off, it shall be thoroughly consolidated against and along the faces of all forms and along the full length and around all parts of joint assemblies, by means of vibrators inserted in the concrete.

Vibrators, for full width vibration of concrete paving slabs, may be either the surface pan type or the internal type with either immersed tube or multiple spuds. They may be attached to the spreader or the finishing machine, or may be mounted on a separate carriage. They shall not come in contact with the joint, load transfer devices, subgrade, or side forms. The frequency of the surface vibrators shall not be less than 3,500 impulses per minute and the frequency of the internal type

shall not be less than 5,000 impulses per minute for tube vibrators and not less than 7,000 impulses per minute for spud vibrators.

When spud type internal vibrators, either band operated or attached to spreaders or finishing machines, are used adjacent to forms, they shall have a frequency of not less than 3,500 impulses per minute.

Vibrators shall not cause the displacement of the side forms nor cause undue delay due to mechanical difficulties. Should these problems arise, they shall be removed from the work and be replaced by equipment meeting these specifications.

Surface vibrating apparatus shall be used only on the top course or layer of the pavement and must be completely out of use when moving over transverse joints or when spreading the bottom course of concrete in two-course construction. It shall not be operated where the surface of the concrete, as spread, is below the elevation of the finished surface of the pavement.

476.66: Placing Steel Reinforcement

All reinforcing metal must be kept clean and free from dirt, oil, paint, grease, mill scale, loose or thick dust or any foreign material which could impair bond of the steel with the concrete. Welded sheet fabric and clipped bar mats shall be furnished in flat sheets and shall be handled carefully during the placing and kept straight until installed.

The reinforcement shall be placed as shown on the plans. The reinforcement shall be placed so that the extreme longitudinal member will be located not more than 4 in. from the edge of the slab section and the ends of all longitudinal members shall extend to within 3 in. of the ends of the slab sections. Adjacent sheets of welded fabric and clipped bar mats shall be lapped as shown on the plans.

Mats or sheets of reinforcement shall be preformed in accordance with the schedule shown on the plans, and placed in the concrete by the strike-off method without chairs or other supporting devices. Laps between adjacent mats or sheets and positions of same with respect to longitudinal joints, transverse joints and edges of pavement shall be as shown on the plans.

Concreting operations shall be performed in a manner so that the mats and sheets will be left in required position.

When reinforced concrete is specified, or permitted by the Engineer, to be placed in one layer, the reinforcement may be positioned in advance of concrete placement or it may be placed in plastic concrete by mechanical or vibratory means immediately after the concrete has been spread and struck-off.

476.67: Finishing Concrete

Immediately after placement, concrete shall be properly finished. The sequence of operations shall be as follows: strike-off, consolidation, transverse screeding, longitudinal floating, straightedging, texturing and finally edging of formed joints. The machine method of finishing shall be employed, except that odd widths or shapes of slab may be finished by hand method.

The addition of superficial water to the surface of the concrete to assist in finishing operations will not be permitted.

A. Machine Finishing.

When the concrete paver is not designed to screed and float finish the freshly placed concrete, the surface shall be struck-off and screeded by an approved finishing machine.

The transverse finishing machine for the pavement shall be mechanical, self-propelled, and of an approved type. It shall be equipped with at least two oscillating screeds. It shall have an independent screed and traction speeds to permit the operator to choose a combination of speeds that will produce the required finish with the consistency of concrete being used. The tops of the forms shall be kept clean by an effective device attached to the machine and the travel of the machine on the forms shall be maintained true without lift, wobbling, or other variation tending to affect the precision finish.

The transverse finishing machine shall consolidate and screed the concrete with no more than two passages over the slab, except with the special permission of the Engineer. The operation of the machine shall be controlled so as to prevent excess mortar and water from being worked to the top of the slab, and from forming a watery mortar in the roll of concrete in front of the screeds.

If excess mortar does form, it shall be removed from the site and wasted. It shall not, under any circumstances, be placed on the sub-base or shoveled ahead on top of the slab. Segregated particles of coarse aggregate which may collect in front of the screed shall be wasted outside the forms.

A uniform depth roll of concrete shall be maintained in front of the screeds at all times, in order to secure uniform consolidation and to prevent lifting of the screed by irregular amount or overload of concrete.

When vibration is permitted vibrators for full width vibration of concrete paving slabs shall meet the requirement herein of 476.65: Spreading and Strike-Off of Concrete, Paragraph B. If uniform and satisfactory density of the concrete is not obtained by the vibratory method at joints, along forms, at structures, and throughout the pavement, the Contractor shall furnish equipment and methods which will produce pavement conforming to the Specifications.

B. Longitudinal Finishing.

As soon as possible after the transverse finishing has been completed as specified above, the surface of the concrete shall be further smoothed and finished by use of an approved longitudinal float.

Mechanical Method: The float in contact with the pavement shall be at least 12 ft in length and at least 12 in. wide. The type of float and details of its construction shall be approved by the Engineer, and it shall be in good working condition.

The tracks from which the float operates shall be accurately adjusted to the required crown. The float shall be accurately adjusted and coordinated with the adjustments of the transverse finishing machine so that a small amount of mortar is carried ahead of the float at all times. The forward speed shall be adjusted so that the float will lap the distance specified by the Engineer on each transverse trip. The float shall pass over each area of pavement no more than twice except with the special permission of the Engineer. Any excess water or soupy material shall be wasted over the side forms on each pass.

Hand Method: When strike-off and consolidation are done by hand methods and longitudinal floating by hand is required the float shall be not less than 16 ft in length, not less than 10 in. in width, suitably stiffened against flexibility and warping and equipped with suitable handles. It shall be operated from bridges spanning the pavement. It shall be operated with a sawing motion parallel to the center line while passing gradually from one side of the pavement to the other. Movement ahead shall be in successive advances of not more than one half the length of the float. Excess water or soupy material shall be wasted over the side forms of each pass.

C. Alternate Finishing and Floating.

As an alternative to the mechanical finishing and floating method in 476.67: Finishing Concrete, Paragraphs A and B preceding, the Contractor may use a long wheel base combination float-finishing machine in lieu of the transverse finishing machine and longitudinal float, providing the combination machine can be adjusted to produce satisfactory results and final finishing is properly timed. Any combination of screeding, floating and finishing machines shall include at least two transverse oscillating screeds.

D. Hand Finishing.

Hand finishing methods will not be permitted except under the following conditions:

In the event of breakdown of the mechanical equipment, hand methods may be used to finish the concrete already deposited on the grade when the breakdown occurs. Narrow widths or areas of irregular dimensions where operations of the mechanical equipment is impractical may be finished by hand methods.

The surface of the concrete shall be struck-off immediately after it is placed and leveled by means of an adjustable steel template 10 in. wide and 2 ft longer than the width of the pavement. A second adjustable steel template 8 in. wide and 2 ft longer than the width of the pavement shall be used directly behind this template. Both templates shall be constructed to produce pavement of the desired cross section and shall have sufficient strength to retain their shape under all working conditions. The templates shall be moved forward with a combined longitudinal and crosswise motion fully resting at all times on the forms, and during the operation, the distance between the two templates shall at no time exceed 10 ft. The template shall be used until a true surface is obtained. While the concrete is being struck-off with the first template, three or more men shall be at work leveling, spading and tamping the concrete in front of the template.

Consolidation shall be attained by the use of a suitable vibrator or other approved equipment.

After the concrete has been struck-off with the hand templates described previously, other finishing operations described as following the screeding by the finishing machines shall be carried out.

Straightedging operations following the screeding shall be sufficient to remove surface irregularities or produce a riding surface equivalent to that produced by machine operation.

Experienced skilled operators and concrete finishers shall be employed. Any laxity in this respect shall be cause for immediate suspension of concreting operations.

E. Finishing at Joints.

The concrete adjacent to joints shall be compacted or firmly placed without voids or segregation against the joint material, under and around all load transfer devices, joint assembly units, and other features designed to extend into the pavement. Concrete adjacent to joints shall be mechanically vibrated as required in 476.65: Spreading and Strike-Off of Concrete. After the concrete has been placed and vibrated adjacent to the joints the machine shall be brought forward operating in a manner to avoid damage or misalignment of joints. If uninterrupted operation of the finishing machine, to, over, and beyond the joints causes segregation of concrete, damage to or misalignment of the joints, the finishing machine shall be stopped when the front screed is approximately 8 in. from the joint. Segregated concrete shall be removed from in front of and off the joint: the front screed shall be lifted and set directly on top of the joint and the forward motion of the finishing machine resumed. When the second screed is close enough to permit the excess mortar in front of it to flow over the joint, it shall be lifted and carried over the joint. Thereafter, the finishing machine may be run over the joint without lifting the screeds, provided there is no segregated concrete immediately between the joint and the screed or on top of the joint.

The edges of the slabs on both sides of the transverse expansion joint shall be finished to the same grade. The top transverse edges of formed joints shall then be rounded to a radius of 0.125 in. by means of approved edging tools. The transverse edges of formed joints shall be rounded with an edging tool having a vertical leg of sufficient length to contact the vertical side of the preformed filler. The lateral edge adjacent to pavement already in place shall be rounded with an edging tool having a vertical leg ¼ in. wide and slightly longer than hat used on the first slab. Tool marks shall be eliminated.

The finishing of the concrete at joints shall be done from a bridge which shall not rest on the concrete at my point. The finishers shall use a short straightedge not less than 4 ft in length when finishing transverse formed joints to ensure that both slab ends will be at the same elevation or grade.

F. Straightedge Testing and Surface Corrections.

Following the longitudinal finishing operations all remaining irregularities shall be eliminated by use of scraping straightedges 10 ft in length, equipped with handles 2 ft longer than the width of one lane. Straightedges shall be made of redwood or aluminum. For wood the cross section shall be 2 in. by 7 in. tapered from 1 in. depth at center to 4 in. depth at ends. For aluminum the preferred shape is the 'T' section with bearing width of not more than 3 in. For both metal and wood the approximate weight should be 30 to 35 lb for the 10 ft length exclusive of handle. The handle shall be attached to form an angle of about 10 degrees with the horizontal so as to present a cutting edge when in operation.

The scraping straightedge shall be employed directly after the longitudinal finisher.

The straightedge shall be placed on the form or edge of completed pavement nearest the operator. The handle shall be lowered to knee height and pushed transversely over the pavement surface. When it reaches the opposite form or center of full width paving, the handle shall be raised to shoulder height and the straightedge drawn back across the pavement in the same path. Additional passes shall be made if all irregularities are not removed by these two passes. Each pass shall be lapped one-half of the length of the straightedge as the work progresses. Any depressions found

shall be immediately filled with freshly mixed concrete struck-off, consolidated, and refinished. High areas shall be cut down and refinished. Special attention shall be given to assure that the surface across joints meets the requirements for smoothness.

Straightedge testing and surface corrections shall continue until the entire surface is found to be free from observable departures from the straightedge and the slab conforms to the required grade and cross section.

Where a wood straightedge is used, the Contractor shall maintain a master straightedge on the job. Wood straightedges are required to be checked on the master straightedge twice a day, once in the morning before use and again at noon. Any variation from a true plane shall be corrected before further use.

G. Final Finish.

Following the scraping straightedges, the final surface texture shall be developed by use of a wet burlap strip dragged longitudinally over the pavement. The burlap shall be not less than 3 ft nor more than 6 ft wide without seams and the leading edge fastened to a wood pole for purpose of keeping burlap in proper position. The burlap shall be a minimum of 2 ft longer than the pavement width being dragged. At least 2 ft of the burlap drag shall be in contact with the surface when dragging the pavement. Generally, two such drags should be used so that the complete operation may be in a forward direction without backing up.

The drags shall be cleaned of mortar when necessary so as to maintain uniform and satisfactory surface texture. Drags that cannot be cleaned shall be discarded and new drags substituted. When not in use, the drag shall be removed from the pavement surface.

The surface of the concrete, after burlap drag operation, shall be uniform in appearance with a gritty texture, shall have the required grade and contour, shall be free from surplus water, rough and porous spots, irregularities, depressions and other objectionable surface features resulting from the improper handling of the tools. The entire operation shall be executed to the satisfaction of the Engineer.

Mechanically operated wire or plastic bristle brooms shall be used where specified to provide an adequate skid resistant surface.

H. Edging at Forms and Joints.

After the final finish has been completed, but before the concrete bas taken its initial set, the edges of slabs along forms and at formed joints shall be carefully finished and tooled to form a smooth rounded surface of the radius required on the plans. Corners or edges of slabs which have crumbled and any areas which lack sufficient mortar for proper finishing shall be cleaned by removing all loose fragments and soupy mortar and shall be solidly filled and finished with a mixture of correct proportions and appropriate consistence. Tool marks shall be eliminated, and all edges shall be smooth and true to line.

The surface of the slab shall not be unduly disturbed by tilting of the tool during use. All concrete on top of the joint filler shall be completely removed.

476.68: Joints

Joints shall be constructed of the types and dimensions and at the locations required by the plans, or specifications, or as directed by the Engineer. They shall be placed to a true alignment as shown on the plans or as directed. The sides of joints shall be protected during the curing period. Joint spaces shall be protected against infiltration of foreign materials before the time of sealing. All joints shall be sealed before the pavement is opened to any kind of traffic. Dowels, tie-bars and tie-bolts shall be prepared and placed across joints where indicated on the plans.

If joints become adulterated with dirt, sand, gravel, or other foreign material during the construction period, they shall be reopened, cleaned and resealed prior to opening the job to traffic. This shall be done in conjunction with final clean-up. The Contractor shall provide sawing equipment adequate in number of units and power to complete the sawing with a water-cooled diamond edge saw blade or an abrasive wheel to the required dimensions and at the required rate, and the Contractor shall provide at least one standby saw in good working order. An ample supply of saw blades shall be maintained at the site of the work at all times during sawing operations. The Contractor shall provide adequate artificial lighting facilities for night sawing. All of this equipment shall be on the job both before and continuously during concrete placement.

The Contractor shall submit for approval by the Engineer their proposed equipment for lighting and sawing prior to commencing work on the project.

A. Longitudinal Joints.

Longitudinal joints shall consist of construction joints between adjacent lanes and surface groove joints when the paving is placed more than one lane wide. They shall be located as shown on the plans or as directed.

Deformed steel bars or tie-bolts of specified length, size, spacing and material shall be placed perpendicular to the longitudinal joints; they shall be placed by approved hand or mechanical methods or rigidly secured by chairs or other approved supports to prevent displacement. Tie-bars and tie-bolts shall not be painted or coated with asphalt or other material or enclosed in tubes or sleeves.

When fixed-forms are used, tie-bolts shall be placed across longitudinal construction joints as shown on the plans or as directed. Tie-bolts shall be installed in two major parts to form an integral tie-bolt unit. Such device, as approved, shall result in proper installation as specified, and shall conform to all standard requirements specified herein for strength and design.

Tie-bars in full width paving shall be of the size and length shown on the plans and placed at right angle to and across the locations of the longitudinal joint. The mid-point of the tie-bar shall be at the longitudinal joint. When supported above the fine grade before placing concrete, the tie-bars shall be at the mid-depth of the pavement. Tie-bars may be placed under the distributed reinforcement by approved hand or mechanical methods before the reinforcement is placed and before the top layer of concrete is placed. If placed under the distributed reinforcement; the tie-bars shall be not less than 2.75 in. nor more than 4.5 in. below the finished pavement surface.

Longitudinal construction joints shall extend for the full depth of the pavement, be perpendicular to the pavement surface and keyed and tied as shown on the plans. The upper edges of the slab shall be rounded as shown on the plans. The slab placed second shall be edged with a tool having a

vertical leg ¼-in. thick and longer than that used in the first slab. The joint shall be filled with sealing material.

All honeycombed areas on the vertical faces of longitudinal joints shall be cleaned with a wire brush and thoroughly wetted and patched with mortar of the same composition as that used in the pavement.

The faces of the concrete slabs at the longitudinal joints shall be painted with asphaltic material specified in 476.40: General before the adjacent slab is placed against it.

Longitudinal surface groove joints shall be constructed by sawing with an approved concrete saw to the depth, width and line shown on the plans. The width of the cut shall not be less than ¼-in. and the depth shall not be less than 25% of the pavement thickness plus ¼ in. Suitable guide lines or devices shall be used to assure cutting the joint on the true line as shown on the plans. The joint shall be sawed before any equipment or vehicles are allowed on the pavement. If sawing is done before the end of the curing period, the faces of the joint shall be cured as provided for transverse sawed joints. The joints shall be filled with joint sealer compound as specified under 476.40: General.

Where there is more than one longitudinal joint, the cutting of this joint shall be done by tandem sawing, which saws shall be fixed to assure lines parallel and true, as shown on the plans.

B. Transverse Expansion Joints.

Transverse expansion joints shall be constructed where shown on the plans or directed by the Engineer.

They shall consist of a preformed filler ¾ in. thick (476.40: General), a top sealing cap of poured joint filler compound (476.40: General), and an approved load transfer assembly (476.40: General).

The expansion joint filler shall be continuous from edge to edge shaped to the subgrade and to the keyway along the edge. It shall extend from the subgrade to 1 in. below the pavement surface.

Preformed joint filler shall be furnished in lengths equal to the paving width or equal to the width of one lane. Where more than one section is used in a joint, the sections shall be securely laced or clipped together. Damaged or repaired joint filler shall not be used.

A removable metal cap shall be placed over the top of the preformed joint during the concreting operations to maintain proper grade and alignment. Concrete shall be placed as specified and shall be carefully spaded against the joint filler. The metal cap shall be removed immediately after the final pass of the finishing machine. A suitable strip of the exact dimensions of the filler shall then be inserted in the joint as a guide and the concrete edged with a ⅛-in. radius edging tool. The strip shall then be removed and any rough or torn places in the concrete shall be corrected.

Particular care shall be taken to keep the concrete in exactly the same plane on the two sides of the joint. No concrete shall extend across the joint. No plugs of concrete shall be permitted anywhere within the expansion space.

C. Transverse Contraction Joints.

These joints shall consist of planes of weakness created by sawing grooves in the surface of the pavement at the locations indicated on the plans.

Approved load transfer assemblies shall be installed at each contraction joint as shown on the plans and in accordance with the Specifications.

When approved by the Engineer, a vibrating bar may be used to move coarse aggregate off the line of the saw cut. The vibrating bar shall be used only in plastic concrete and so as not to produce areas of segregated mortar.

The Contractor's sawing equipment and method of sawing shall be subject to the approval of the Engineer. The timing and sawing and the order in which joints are sawed shall be subject to such control by the Engineer as in their judgement is necessary to protect the pavement from ravelling, spalling, cracking, or other damage. Normally, contraction joints will be sawed progressively with an approved circular saw at not less than 6 nor more than 24 hours after finishing. All joints shall be sawed before uncontrolled shrinkage cracking takes place. If necessary, the sawing operations shall be carried on both during the day and the night regardless of weather conditions.

The pavement shall be cut for not less than ⅛ in. in width to a depth at least 25% of the pavement thickness.

Secondary saw cuts shall be made as necessary so that the final joint width is at least ⅜ in. or as shown on the plans. In the event of excessive relief of the joint, care should be taken to secure this minimum opening.

To control random cracking the Engineer may require that initial curing (for the first 24 hours) be done with wet burlap. The sawing of any joint shall be omitted if a crack occurs at or near the joint location prior to the time of sawing. Sawing shall be discontinued when a crack develops ahead of the saw. In general, all joints should be sawed in sequence. All contraction joints in lanes adjacent to previously constructed lanes shall be sawed before uncontrolled cracking occurs.

D. Transverse Construction Joints.

Transverse construction joints shall be placed at the end of each day's work and when placing concrete will be interrupted for more than 30 minutes. No transverse construction joint shall be placed closer than 15 ft to another transverse joint. If sufficient concrete has not been mixed at the time of interruption to form a slab at least 15 ft long, the excess concrete back to the last preceding joint shall be removed and disposed as directed.

Substantial temporary wood or metal bulkheads shall be used to form construction joints. Particular care will be taken to provide a good riding joint and hand finishing shall be kept to a minimum. Poor riding joints will be corrected.

When the construction joint is placed at a regular location of an expansion or contraction joint, a standard load transfer assembly will be used. When the construction joint is at other than the regular joint location, deformed bars will be used to create a bonded tie across the joint. Minimum tie steel shall be #8 round deformed bars, 48 in. long at 12 in. center to center.

E. Load Transfer Devices.

Dowels shall be held in position parallel to the surface and center line of the slab by a metal device meeting the requirements of 476.40: General or shall be placed by an approved mechanical placing device.

The sub-base at the locations where expansion, contraction, and construction joint load transfer assemblies are to be installed shall be trimmed accurately to the required cross section and depth of pavement. Where used, the complete joint assembly shall be carefully placed. If the sub-base is trimmed too low or if there are any open spaces beneath the preformed joint filler, the joint assembly shall be removed, the sub-base correctly graded and tamped, and the joint assembly reset.

One-half the length of each slip-dowel bar of load transfer units shall be rendered bondless with a coat of either a graphite lubricant or a wax base grease meeting the requirements of M8.14.0: Load Transfer Assembly. The graphite lubricant shall be applied by daubing, mopping or gloved hand to produce a thorough coating approximately $^{1}/_{16}$ in. thick. Brushes shall not be used for the application of the graphite lubricant.

The wax base grease shall be pre-heated to temperatures of 170°F to 190°F and applied either by dipping or by brush to produce a coating approximately $^{1}/_{16}$ in. thick.

Dowels shall be coated at least one hour before the concrete is placed around the dowel assembly.

The assembly shall be held in the required position at line and grade by metal stakes or pins throughout the operation of placing and striking-off the concrete. No concrete shall be placed unless the methods and devices used by the Contractor for installing and securing the joint assembly, including any joint filler required, and finishing the joint meet with the approval of the Engineer. Immediately prior to depositing the concrete, the position of dowels shall be checked and the assemblies tightened if necessary. The installation of dowel assemblies and the placement of the surrounding concrete shall result in dowels tightly encased in concrete and parallel to both the pavement surface and center line at plan locations. In lieu of using dowel assemblies at contraction joints, dowel bars may be placed in the plastic concrete by a mechanical device approved by the Engineer.

476.69: Numbering Slabs

The pavement slabs shall be numbered consecutively as the work progresses, and the last slab placed each day shall be stamped with the date. The marking shall be on the right hand corner at the beginning of each slab, and so placed that it can be read traveling in the direction the pavement was laid. The figures and letters shall be 1.5 in. high and plainly and neatly stamped after the final finish of the concrete as directed. When two or more paver mixers are working, the distinguishing letter for each mixer shall be stamped adjacent to the number.

476.70: Surface Test

The entire surface shall be checked while the concrete is still plastic with an approved metal straightedge 10 ft in length, and any deviation from the general surface shall be corrected at once. The surface shall be checked again immediately after the removal of the burlap where an initial burlap covering is used, or at the end of 72 hours where 72-hour covering is used. The straightedge shall be placed at several points across the pavement parallel to the centerline and shall be advanced in 5-ft steps. Areas showing high spots of more than ⅛ in. but not exceeding ½ in. in 10 ft shall be marked and immediately ground or rubbed down with an approved tool to an elevation where the area or spot will not show surface deviations in excess of ⅛ in. when tested with a 10-ft straightedge. This grinding or rubbing shall be conducted carefully so as to avoid loosening coarse aggregate or otherwise damaging the slab.

Where the departure from correct cross section exceeds ½ in., the pavement shall be removed and replaced by and at the expense of the Contractor.

Any area or section so removed shall be not less than 15 ft in length nor less than the full width of the lane involved. When it is necessary to remove and replace a section of pavement, any remaining portion of the slab adjacent to the joints that is less than 15 ft in length, shall also be removed and replaced.

476.71: Curing

Immediately after the finishing operations have been completed and as soon as marring of the concrete will not occur, the entire surface of the newly placed concrete shall be covered and cured in accordance with one of the following methods. In all cases in which curing requires the use of water, the curing shall have prior rights to all water supply or supplies. Failure to provide sufficient cover material of whatever kind the Contractor may elect to use, or a lack of water adequate to take care of both curing and other requirements, shall be cause for immediate suspension of concreting operations. The concrete shall not be left exposed for more than 30 minutes between stages of curing or during the curing period. Whenever fixed-forms are not used, exceptional care shall be taken in the use of paper or burlap to prevent any damage to the unsupported edges of the pavement. The curing media shall be applied at the appropriate time and shall be applied uniformly and completely to all surfaces and edges of the pavement.

A. Moist Curing.

Initial Curing: Strips of burlap saturated with water shall be placed on the fresh concrete surface carefully so as to avoid marring, and the strips shall overlap not less than 3 in. This burlap shall be kept thoroughly and continuously wet by sprinkling it with a fine spray of until it is removed. Initial curing with wet burlap shall be for a period of not less than 24 hours. Burlap which has been used for any purpose other than curing concrete shall not be used.

Final Curing: Following completion of initial curing the curing shall be continued using an additional layer of burlap or cotton mats. This double layer shall remain in place and shall be kept thoroughly and continuously saturated with water for a period of not less than 5 days.

Cotton mats may be used for final curing if approved by the Engineer. Such covering shall be as effective in preventing evaporation of mixing water and controlling variance in temperature of the concrete as the two thicknesses of wet burlap. If cotton mats are used for final curing, the burlap shall be removed in such a manner that not more than 60 lineal ft of pavement is exposed at one time, followed at once by application of cotton mats.

B. Waterproof Paper Curing.

The top surface and sides of the pavement shall be entirely covered with waterproof paper. Each paper cover shall be not less than 20 or more than 75 ft in length, and shall be of such width that, when in place, it will extend to at least 18 in. beyond the edges of the slab to be covered.

Paper covers may be furnished in widths corresponding to that of the slab provided supplemental stringer sheets, at least 18 in. wide are used, in which case such sheets shall be placed along the edges of the slab under the paper covers. On removal of forms the paper shall be brought down

over the slab side and held with a continuous bank of earth. The junctions between the paper covers shall be lapped approximately 12 in. and held in place with a bank of earth.

All rips or holes occurring in the paper covers while in use shall be immediately repaired with a sealed patch to render them airtight. Covers which have become damaged or soiled to the extent that they will not provide satisfactory curing or will mar the concrete shall not be used.

The paper shall be left in place for a period of 72 hours or longer, if necessary to obtain the required strength. The surface of the pavement shall be moist when the paper is placed.

C. Impervious Membrane Curing.

After finishing operations have been completed, and immediately after the free water has left the surface, the surface of the slab shall be completely coated and sealed with a uniform layer of white pigmented curing compound. The compound shall be applied in a 2-coat continuous operation and at a total coverage of not less than 1 gal per 150 ft^2 of surface.

The compounds shall be applied by means of a mechanical pressure sprayer mounted on a self-propelled carriage. The compound shall form a uniform, continuous, coherent film that shall not check, crack or peel and shall be free from pin holes, or other imperfections. If discontinuities, pin holes or abrasion exist, an additional coat shall be applied within 30 minutes to the affected areas. The equipment shall provide adequate stirring of the compound during application. Also, wind protection to the spray fog shall be provided by an adequate shield when the compound is applied to the pavement. The equipment for applying the compound shall be approved by the Engineer before work is started. Should the method of applying the compound not produce a uniform film, its use shall be discontinued and the curing shall be done by one of the other approved methods specified herein.

The curing compound shall be of such character that the film will harden within 30 min after application. Should the film become damaged from any cause within the required curing period, the damaged portions shall be repaired immediately with additional compound.

Liquid membrane material shall not be placed on the faces of joints. Immediately after the contraction joints are sawed, they shall be protected and moist-cured with strips of waterproof paper or plastic. Ropes made of jute or cotton may also be used. The method used shall insure proper curing of the portion of the slab adjacent to the joints.

Immediately after the forms are removed, the entire area of the sides of the slab shall be coated with the curing compound at the rate specified for the pavement surface. This spraying shall be a continuous process and waiting until all forms have been removed before making the application will not be permitted. Hand-spray equipment will be permitted for the application of the curing compound over the sides of the slab. Care shall be used to prevent coating the ends of sawed contraction joints. If hair checking develops before the curing compound can be applied, the concrete shall be moist-cured for at least 24 hours before applying any membrane curing compound. If rain falls on the newly coated pavement before the film has dried sufficiently to resist damage, or if the film is damaged in any other way, the Contractor will be required to apply a new coat of material to the affected areas, equal to that specified for the original coat. The treated surface shall be protected by the Contractor from injury for a period of at least 3 days. All traffic, foot or otherwise, will be considered injurious to the film of the applied compound. A minimum of

foot traffic will be permitted on the dried film as necessary to carry on the work properly, provided any damage to the film is immediately repaired by the application of an additional coat of compound.

D. White Polyethylene Sheeting.

The general requirements for the use of white polyethylene sheets shall be those for waterproof paper curing in 476.71: Curing, Paragraph B.

E. Curing in Cold Weather.

During cold weather, when the air temperature may be expected to drop below 40°F, a sufficient supply of loose dry hay or straw or other suitable blanketing material for covering shall be provided along the line of the work, and at any time when the air temperature may be expected to reach the freezing point during the day or night, the material so provided shall be spread to a sufficient depth to prevent freezing of the concrete. The period of time such protection shall be maintained shall be not less than 5 days or until the concrete has hardened thoroughly. The use of such hay or straw does not take the place of the burlap or other covering specified herein, but shall be applied in addition to the covering. The Contractor shall be responsible for the quality and strength of the concrete placed during cold weather, and any concrete injured by frost action shall be removed and replaced at the Contractor's expense.

476.72: Removing Forms

Forms shall not be removed for 12 hr after the concrete has been placed, or for a longer period if directed. Extreme care shall be taken in removing forms in order that no damage will be done to the concrete. Under no condition shall any bar, pick, or other tool be used which depends upon leverage on the concrete, for removal of the pins or forms.

As soon as side forms are removed and prior to sealing joints, the ends of all joints shall be opened and all mortar or foreign material shall be removed from the joint opening above the filler or other space as provided so that there will be complete freedom for required movement of the joint. After the forms have been removed, the side of the slab shall be cured as outlined in one of the methods indicated previously.

All holes or honeycomb shall be patched promptly with mortar, of the same composition as that used in the pavement, which has been allowed to set for about one-half hour after mixing. Major honeycombed areas will be considered as defective work and shall be removed and replaced. Any area or section so removed shall not be less than 15 ft in length nor less than full width of the lane involved. When it is necessary to remove and replace a section of pavement, any remaining portion of the slab adjacent to the joints that is less than 15 ft in length, shall also be removed and replaced.

476.73: Sealing Joints

Joints shall be sealed after curing and before any kind of traffic is permitted on the pavement.

The sealing of joints shall be undertaken only when the atmospheric temperature is above 40°F, and when the weather is not foggy or rainy.

Just prior to sealing, each joint shall be thoroughly cleaned of all foreign material, including curing compound, by means of a mechanical, power-operated concrete grooving machine or a power wire

brush. The concrete grooving machine or wire brush shall be operated in such a manner that the vertical faces of the concrete in the joint opening will present thoroughly clean concrete surfaces for application of the joint sealing compound. Following this operation, each joint shall then be further cleaned by means of a powerful jet of compressed air.

No joints shall be filled when there is any free water in or adjacent to the joints. Joint walls and all surfaces to which the sealing compound is to be applied shall be surface dry for at least 3 hr prior to placing. No joints shall be sealed until the joints have been approved by the Engineer as being clean and dry in accordance with the foregoing provisions.

Joints shall be sealed with an approved joint sealing compound conforming to M3.05.0: Hot Poured Joint Sealer.

The melting devices used for heating the joint sealing material shall be of the double boiler, indirect heating type using high flash oil for heat transfer. Constant mechanical agitation during the entire melting period shall be provided and no material shall be subjected for more than 60 min to the high temperature required for melting of the material. Positive temperature control (preferably by thermostat) of the heating medium of the sealing compound shall be provided at all times.

Hot-poured sealing compound shall not be subjected to temperatures in excess of 450°F at any stage of the melting operation. Sealing material that has remained in the kettle in a molten state overnight will not be acceptable for use.

Hot-poured filler for use in sealing all joints, except expansion joints, shall be applied under pressure. When hot-poured filler is applied under pressure, the material shall be applied by means of a heavy-duty air operated pump, or other approved device. The material shall be discharged through a suitable nozzle in such a way as to fill the joint opening solid and uniformly in a neat and workmanlike manner.

When the atmospheric temperature at the time of sealing is below 50°F, the surface of the sealing compound in the finished joint shall be not less than $^{3}/_{16}$ in. below the level of the pavement surface. Otherwise, the surface of the finished joint shall be within ¼ in. below the level of the pavement surface.

The sealing shall be done in such a manner that the material will not be spilled on the exposed surfaces of the concrete. Any excess material on the surface of the concrete pavement shall be removed immediately and the pavement surface cleaned.

In the event paving and construction operations must close down in the Fall because of cold weather and the contract cannot be completed until the following year, the Engineer shall require the Contractor to clean and seal all joints in the part of the pavement completed at the time of the shut-down, in the manner prescribed in this Specification. Under no circumstances shall any joint remain unsealed between the period of shut-down in the fall and resumption of construction in the spring.

476.74: Protection of Pavement

The Contractor shall erect and maintain suitable barricades and employ watchmen to exclude traffic from the newly constructed pavement for the period herein prescribed. These barriers shall be so arranged as not in any way to interfere with or impede public traffic on any lane intended to

be kept open. Necessary signs shall be maintained by the Contractor clearly indicating the open lanes to the public. When it is necessary to provide for traffic across the pavement, the Contractor shall construct at their entire expense, immediately after the finishing of the concrete, the necessary bridges over the pavement clear of the forms and at least 3 in. clear of the concrete and sufficiently strong to carry the traffic. The Contractor shall maintain these bridges until the concrete has attained the strength required in these Specifications for opening to traffic.

Prior approval shall be obtained from the Engineer for crossing of existing structures with the paving train.

When fixed-forms are not used, the Contractor shall be required to have available at all times, materials for the protection of the edges and surface of the unhardened concrete in order that the concrete may be properly protected against the effects of rain before the concrete is sufficiently hardened. Such protective materials shall consist of standard metal forms or wood plank having a nominal thickness of not less than 2 in. and a nominal width of not less than the thickness of the pavement at its edge for the protection of the pavement edges, and covering material such as burlap or cotton mats, curing paper, or plastic sheeting material for the protection of the surface of the pavement.

An adequate quantity of the materials described above shall be available, loaded on vehicles which can be promptly driven or towed to the scene of paving operations and be located not more than one-half mile from the place where the paving operations are in progress.

When rain appears imminent, all paving operations shall stop and all available personnel shall begin placing forms against the sides of the pavement and covering the surface of the unhardened concrete with the protective covering.

The Contractor shall have on hand at the paving site sufficient burlap or paper to cover at least 6,000 ft^2 of freshly laid pavement as a protection against sudden thunder showers or heavy downpours of rain.

Any part of the pavement damaged by traffic or other causes occurring prior to its final acceptance shall be repaired or replaced by and at the expense of the Contractor in a manner satisfactory to the Engineer. The Contractor shall protect the pavement against both public traffic and the traffic caused by their own employees and agents. The pavement shall be so protected until the beam test shows a strength of at least 550 psi.

476.75: Opening to Traffic

Upon completion of curing operations as specified, the pavement may be opened to traffic provided that beam tests show that the concrete has attained a modulus of rupture of at least 550 psi. However, curing operations will not be considered completed until a curing period of at least 7 days has elapsed since the concrete was placed.

Where high-early strength concrete is used, the pavement may be opened to traffic after a shorter period of curing or as beam tests show that the concrete has attained a modulus of rupture of at least 550 psi.

476.76: Test Specimens

Test specimens shall conform to the requirements of M4.02.13: Test Specimens. They will be taken in the field from batches used in the pavement to determine the adequacy of control of the materials, the proportioning and mixing of the concrete and compliance with the minimum strength requirements. Test beams shall be 6 in. x 6 in. x 36 in. in length and shall be made, cured, and used in accordance with AASHTO T 23 and T 97. At least two beams shall be made for each 2,000 yd^2 or fraction thereof of pavement placed.

Payment for the forms, material and assistance as the Engineer may require to make, cure and test the field specimens will not be paid for directly but shall be included in the contract unit price for the pavement.

476.77: Tolerance in Pavement Thickness

It is the intent of these Specifications that the pavement shall be constructed in accordance with the thickness shown on the plans. Before final acceptance of the work or during the progress of the work, as may be advisable or necessary, the thickness or depth of concrete pavement will be determined by cores taken by the Contractor under the direction of the Engineer or their designee, and unsatisfactory work shall be repaired, replaced, or will be paid for at an adjusted unit price. Where any pavement is found deficient in thickness, the following rules relative to replacement of the faulty pavement and adjustment of unit price shall govern.

The thickness of the pavement will be determined by average caliper measurement of cores tested in accordance with AASHTO T 148.

For the purpose of establishing an adjusted unit price for pavement, units to be considered separately are defined as not more than 1,000 linear ft of pavement in each traffic lane starting at the end of the pavement bearing the smaller station number. A traffic lane is defined as being between longitudinal joints or between a longitudinal joint and a pavement edge. The last unit in each lane shall be 1,000 ft plus the fractional part of 1,000 ft remaining.

One core will be taken at random in each unit by the Contractor.

When the measurement of the core from a unit is not deficient by more than 0.25 in. from the plan thickness, the pavement in the unit represented will be paid for at full unit price.

When such measurement is deficient by more than 0.25 in. but less than 0.5 in., two additional cores at intervals of not less than 300 ft will be taken. The thickness of the unit will be considered to be the average of the three cores provided none is deficient by 0.5 in. or more. Payment for the pavement in the unit will be at an adjusted unit price as provided in 476.81: Basis of Payment.

In calculating the average thickness of the pavement, measurements in excess of the specified thickness will be considered as the specified thickness. Measurements which are less than the specified thickness by ½ in. or more will not be included in the average.

When any core is deficient by ½ in. or more, additional cores will be taken at 25 ft intervals in each direction until a core is found in each direction that is deficient by less than ½ in. Each such exploratory core will represent the depth of 25 lineal ft of pavement one traffic lane in width. The pavement so represented will be deducted from the unit of pavement being measured and the remaining area cored and measured as described previously.

Pavement deficient by ½ in. or more but less than ¾ in. may be accepted by the Engineer at no payment to the Contractor. However, the Contractor may, at their own expense, remove and replace the pavement, which will then be cored and measured for payment as herein provided.

Pavement deficient by 0.75 in. or more shall be removed and replaced by the Contractor at their own expense. Payment for such replaced pavement will be as provided herein.

Other areas such as intersections, entrances, crossovers, ramps, etc., will be considered as one unit and the thickness of each unit will be determined separately. Small irregular unit areas may be included as part of another unit. At such points as the Engineer may select in each unit, one core will be taken for each 2,000 yd² of pavement, or fraction thereof, in the unit. Thickness of each unit will be determined as described previously except that when additional cores in any unit are required, they will be taken at locations as directed by the Engineer.

COMPENSATION

476.80: Method of Measurement

Cement concrete pavement will be measured by the square yard and the quantity paid for shall be the number of square yards as determined by the actual area of the finished pavement, complete in place and accepted, but subject to adjusted proportional payment or non-payment as stated in 476.81: Basis of Payment for all pavement areas found deficient in depth.

The width for measurement of the pavement shall be as shown on the typical cross sections, including additional widening where called for, or as otherwise directed in writing by the Engineer. The length will be measured horizontally along the center line of each roadway or ramp.

476.81: Basis of Payment

Standard cement concrete pavement will be paid for at the contract unit price per square yard complete in place subject to price adjustments as set forth below. No additional payment over the unit contract price will be made for any pavement having an average thickness in excess of that shown on the plans. Average thickness shall be calculated as stated in 476.77: Tolerance in Pavement Thickness. Where the average thickness of pavement is deficient in thickness by more than ¼ in., but less than ½ in., payment will be made as follows:

Table 476.81-1: Concrete Pavement Deficiency

Deficiency in Thickness, Determined by Cores (in.)	Proportional Part of Contract Prices Allowed
≤ ¼	100%
> ¼ but ≤ ⅜	80%
> ⅜ but < ½	70%

Where core measurements indicate that the pavement is deficient in thickness by ½ in. but less than ¾ in. the pavement may be accepted without any payment being made to the Contractor, or it may be replaced at the option of the Contractor with pavement of the specified thickness at their entire expense. If the deficiency in thickness is ¾ in. or more, the Contractor shall be required to remove such deficient areas and replace them with cement concrete pavement conforming with all requirements of these Specifications and to the thickness shown on the plans. Such areas when

accepted will then be duly included in the yardage for which payment shall be made at the contract unit price. The Contractor shall receive no compensation for materials or labor involved in removing and replacing deficient areas.

When high early strength concrete is specified at the direction of the Engineer, in order to expedite the opening of pavement to traffic, the high early strength will be obtained by means of an increase in the cement factor and a reduction of the water-cement ratio. The extra cement will be paid for at the actual unit cost per barrel to the Contractor for the extra quantity of cement actually incorporated in the pavement, plus an allowance of 5% of the cost per barrel, which cost shall include all equipment, labor storage, transportation and work incidental to its inclusion in the concrete and incorporation in the finished pavement.

476.82: Payment Items

476. Cement Concrete Pavement .....Square Yard

SUBSECTION 477: MILLED RUMBLE STRIPS

DESCRIPTION

477.20: General

The work consists of constructing rumble strips on paved highway shoulders by milling grooves into finished hot mix asphalt surfaces. Milled Rumble Strips are categorized as Type A, Type B, or Type C. Type A are rectangular milled grooves at regular intervals in the paved surface, Type B rumble strips are rectangular grooves at regular intervals with designed gaps between intervals to accommodate bicyclists and Type C rumble strips form continuous grooves in the paved surface in the form of a vertical sinusoidal wave pattern.

CONSTRUCTION METHODS

477.61: Equipment

The equipment shall self-align with the slope of the roadway surface and/or any irregularities in the roadway surface.

The Contractor shall demonstrate to the Engineer the ability to achieve the desired groove without tearing or snagging the roadway surface prior to beginning the work.

477.62: Installation of Rumble Strips

Rumble strips shall be installed in accordance with the locations, dimensions, and Type shown on the plans.

477.63: Control of the Work Area

At the end of each working day, all equipment shall be moved to a location where it does not present a hazard to traffic. The pavement shall be cleaned by sweeping and the work area shall be reopened to traffic.

Pavement millings shall become the property of the Contractor and shall be removed and disposed of off-site.

COMPENSATION

477.80: Method of Measurement

Milled Rumble Strip (Type A) and Milled Rumble Strip (Type C) will be measured by the total length of installed rumble strip. Milled Rumble Strip (Type B) will be measured by the total length of installed rumble strip excluding the designed gaps. Breaks at castings, bridge decks, intersections or other breaks will not be measured for payment for all types.

477.81: Basis of Payment

Payment for Milled Rumble Strip (Type A), Milled Rumble Strip (Type B), and Milled Rumble Strip (Type C) will be made at the contract unit price per foot of rumble strips, complete in place. Such payment will be full compensation for furnishing all equipment and labor for satisfactorily performing the work including cleanup and disposal of excess materials.

477.82: Payment Items

477.	Milled Rumble Strip (Type A)	Foot
477.1	Milled Rumble Strip (Type B)	Foot
477.2	Milled Rumble Strip (Type C)	Foot

SUBSECTION 480: PAVEMENT CRACK SEALING

DESCRIPTION

480.20: General

The work shall consist of furnishing all labor, equipment, and materials necessary to perform all operations in connection with cleaning and sealing of construction, random, and vegetation cracks in hot mix asphalt pavement, and vegetation removal and sterilization of cracks where necessary.

MATERIALS

480.30: General

Crack sealer shall be a modified asphalt compound designed especially for filling and sealing pavement cracks.

Chemically Modified Crumb Rubber Crack Sealer	M3.05.1
Hot Applied Crack Sealer	M3.05.2
Asphalt-Fiber Crack Sealer	M3.05.3

Detacking material shall be a boiler slag aggregate, detacking agent, or similar product designed to prevent tracking of freshly applied sealants. The material shall be compatible with the crack sealing material. Blotting materials, including sand, sawdust, or paper shall not be used. When crack sealing prior to paving ultrathin bonded overlay detaking material detacking material shall not be allowed.

A. Crack Sealer.

When crack sealing under Item 480.1 the Contractor shall use Asphalt-Fiber Crack Sealer in accordance with M3.05.3: Asphalt-Fiber Crack Sealer.

B. High Performance Crack Sealer.

When crack sealing under Item 480.2 the Contractor shall use either Chemically Modified Crumb Rubber Crack Sealer in accordance with M3.05.1: Chemically Modified Crumb Rubber Crack Sealer or Hot Applied Crack Sealer in accordance with M3.05.2: Hot Applied Crack Sealer.

CONSTRUCTION PROCEDURES

480.40: General.

The Contractor shall obtain crack sealing material of the type specified and shall provide satisfactory Quality Control (QC) of the crack sealing operation as further outlined in 480.61: Contractor Quality Control Plan. The specific QC procedures to be implemented shall be identified in the Contractor's Quality Control Plan (QC Plan). The Contractor shall present and discuss in sufficient detail, the QC information and activities related to crack sealing when requested.

Crack sealing materials shall be placed to the required width and thickness.

480.41: Crack Sealing Equipment Requirements.

Equipment used in the performance of the work shall be maintained in a satisfactory working condition at all times. The following equipment shall be utilized:

a) Portable air compressor capable of furnishing not less than 150 cubic feet of air per minute at not less than 90 psi of pressure at the nozzle. The compressor shall be equipped with traps that will maintain the compressed air free of oil and water.
b) Hot air lance for cleaning, drying, and heating sidewalls of cracks to provide clean, oil-free compressed air at a volume of 100 cubic feet per minute, a pressure of 90 psi, and a minimum temperature of 2000°F. The lance shall be designed such that the flame does not damage the pavement.
c) Manually operated gas powered air-broom or self-propelled sweeper designed especially for use in cleaning highway and airfield pavement shall be used to remove debris, dirt, and dust from the cracks.
d) Melter used to melt or maintain crack sealant compound at the recommended application temperature. The heating shall be indirectly fired and shall be equipped with a remote heat exchanger and hot oil circulation pump capable of maintaining a consistent temperature of the heat transfer oil. The heat transfer oil shall be circulated to all sides and the bottom of the vat containing the crack sealant compound making a continuous loop back to the heat exchanger and having a flash point of not less than 600°F.

The melter shall be equipped with a satisfactory means of agitating the crack sealant at all times. This may be accomplished by continuous stirring with mechanically operated paddles and/or by a circulating gear pump attached to the melter. The melter must be equipped with a thermostatic control calibrated between 200°F and 550°F and must be capable of pumping the crack sealing material.

480.42: Preparation of Cracks

All cracks shall be blown clean and with the hot air lance to eliminate all vegetation, dirt, moisture, and seeds. All debris removed from the cracks shall be removed from the pavement surface immediately.

Crack sealant material shall not be applied:

a) In wet cracks or where frost, snow, ice, or deicing material is present.
b) When ambient temperature is below 25°F.

If the temperature is below 40°F care shall be taken to ensure the cracks are sufficiently heated before crack sealant is applied.

If the temperature is above 85°F care shall be taken to ensure the crack is sufficiently wide enough to allow the crack sealer to penetrate into the crack and that the material does not track when traffic is applied.

480.43: Preparation and Placement of Sealant

A. Preparation of Sealer.

Crack sealing material shall be thoroughly mixed for a minimum of one hour before application can begin. Whenever material is added to the tank, sealing operations shall be suspended for 1 hour to allow for the minimum required mixing time. Minimum application temperature shall be 320°F or per the manufacturer's recommendations.

B. Cracks under $^{1}/_{16}$ in. in width.

Cracks of widths less than $^{1}/_{16}$ in. shall not be sealed.

C. Cracks $^{1}/_{16}$ in. to less than 1 in. in width.

Cracks of widths between $^{1}/_{16}$ in. and 1 in. shall be sealed according to the following:

(1) Cleaning and Heating of Cracks.

The crack shall be cleaned and heated by the hot air lance so that it is sufficiently dry and promotes adhesion of the crack filling material but does not leave the pavement visibly scorched. The sealant shall be applied within three minutes of the cracks being heated by the hot air lance.

(2) Installation of Sealer.

Sealant shall be delivered to the pavement cracks through a high-pressure hose line and applicator shoe. The diameter of the applicator shoe is not to exceed 3.5 in. When the pavement cracks are sealed, the width of the sealant on the pavement (over-banding) shall be a minimum of 2-½ in. and no greater than 3-½ in.

All cracks shall be sealed according to the manufacturer's recommendations. The sealant shall be well bonded to the pavement and as specified herein. The cracks shall be filled and banded with sealant centered directly over the crack.

The thickness (i.e., projection above the pavement profile) of the middle portion of the sealant band shall be between $^{1}/_{16}$ and $^{3}/_{16}$ in. The band shall be feathered so its edges are flush with the pavement.

More than one application of sealant may be necessary where the sealant has sunk into the crack, leaving a crevice. There shall be no defects, including any formation of voids or entrapped air. Corrections of these deficiencies or other unsatisfactory work unacceptable to the Engineer shall be at no additional cost to the Department.

D. Cracks greater than 1 in. in width.

Cracks that are greater than 1 in. shall be addressed by the Engineer under this or a separate item.

E. Alligator Cracks.

(1) Cleaning and Heating of Cracks.

The sealant shall be applied within three minutes of the cracks being heated with the hot air lance.

(2) Installation of Sealer.

Cracks on the perimeter or boundary of the alligator cracked area shall be completely filled and banded with minimum of 2-½ in. and no greater than 3-½ in. width of sealant in accordance with the provisions of 480.43: Preparation and Placement of Sealant, Part C. There shall be no treatment of the alligator cracks within the boundary.

480.44: Opening to Traffic

Prior to opening the roadway to traffic detacking material in accordance with 480.30 shall be broadcast over the crack sealant to prevent the sealant from being picked up.

All workmanship shall be of the highest quality, and any excess of spilled sealant shall be removed from the pavement by approved methods and discarded. Any workmanship determined to be below standards for crack sealing will not be accepted and will be corrected and/or replaced as required by the Engineer.

Pavement areas, damaged by traffic shall be repaired at no additional cost to the Department.

CONTRACTOR QUALITY CONTROL

480.60: General

The Contractor shall provide a QC System adequate to ensure that all workmanship meets the quality requirements herein. The Contractor shall provide qualified QC personnel and perform QC inspection, corrective action (when necessary), and documentation as outlined further below.

480.61: Contractor Quality Control Plan

The Contractor shall provide and maintain a QC Plan which should sufficiently document the QC processes of all Contractor parties (i.e., Prime Contractor, Subcontractors, Producers) performing work required under this specification.

A. QC Plan Submittal Requirements

At the pre-construction meeting, the Contractor shall be prepared to discuss the QC Plan. Information to be discussed shall include the proposed QC Plan submittal date, QC organization, and sources of materials. The Contractor shall submit the QC Plan to the Engineer for approval not less than 30 days prior to the start of any work activities related to crack sealing (including preparation of cracks) addressed in 480.42: Preparation of Cracks. The Contractor shall not start work on the subject work items without an approved QC Plan.

B. QC Plan Format and Contents

The QC Plan shall be structured to follow the format and section headings outlined in the MassDOT Model QC Plan. The pages of the QC Plan shall be sequentially numbered. The QC Plan shall address, in sufficient detail, the specific information requested under each section and subsection contained in the MassDOT Model QC Plan.

C. QC Plan Approval and Modifications

Approval of the QC Plan will be based on the inclusion of the required information. Revisions to the QC Plan may be required prior to approval for any part of the QC Plan that is determined by the Department to be insufficient. Approval of the QC Plan does not imply any warranty by the Engineer that the QC Plan will result in completed work that complies with the specifications. It remains the responsibility of the Contractor to demonstrate such compliance. The Contractor may modify the QC Plan as work progresses when circumstances necessitate changes in Quality Control personnel or procedures. In such case, the Contractor shall submit an amended QC Plan to the Department for approval a minimum of three calendar days prior to the proposed changes being implemented.

480.62: Quality Control Personnel Requirements

The Contractor's Quality Control organization shall, at a minimum, consist of the personnel qualified by the Contractor to perform the required inspection. For crack sealing operations, production personnel may also serve as QC personnel. Every effort should be made to maintain consistency in the QC organization; however, substitution of qualified personnel shall be allowed. When circumstances necessitate substitution of QC personnel not originally listed in the approved QC Plan, the Contractor shall submit an amended QC Plan for approval in accordance with 480.61: Contractor Quality Control Plan, Part C.

A. Construction Quality Control Manager.

The Contractor's QC System and QC Plan shall be administered by a qualified Construction QC Manager. The QC Manager must be a full-time employee of the Contractor or a QC consultant engaged by the Contractor. The QC Manager (or their assistant in the QC Manager's absence) shall have full authority to institute any and all actions necessary for the successful implementation of this specification and the QC Plan. The QC Manager (or their assistant in the QC Manager's absence) shall be available to communicate with the Engineer at all times.

Principal responsibilities of the QC Manager shall include preparation and submittal of the Contractor's QC Plan, managing the activities of all QC personnel, communicating on quality issues within the Contractor's organization, and ensuring that all requirements outlined in the approved QC Plan are met.

The QC Manager shall be certified by the National Center for Pavement Preservation (NCPP) in Crack Treatment.

B. Field Quality Control Technician(s).

All Contractor QC inspection conducted shall be performed by qualified Field Quality Control Technicians (Field QCTs). The Contractor shall provide a sufficient number of Field QCTs to adequately implement the minimum QC requirements contained in herein and as outlined in the approved QC Plan.

At a minimum, one member of the crack sealing crew shall be certified by NCPP in Crack Treatment.

480.63: Quality Control Inspection

The Contractor shall perform QC inspection of all work items addressed under this specification. Inspection activities during crack sealing may be performed by qualified production personnel (e.g. Skilled Laborers, Foremen, and Superintendents). The Contractor shall not rely on the results of the Department's Acceptance inspection for QC purposes. The Engineer shall be provided the opportunity to monitor and witness all QC inspection.

QC inspection activities must address the following four primary components:

a) Equipment.
b) Materials.
c) Environmental Conditions.
d) Workmanship.

The minimum frequency of QC inspection activity shall be in accordance with the requirements below and as outlined in the approved QC Plan. Inspection Report Forms (IRFs) may be used by the Contractor to document the results and findings of QC inspection.

Table 480.63-1 - Minimum QC Inspection of Crack Sealing Operations

Inspection Component	Inspection Attribute	Minimum Inspection Frequency	Point of Inspection	Inspection Method
Equipment	As specified in QC Plan	Per QC Plan	Per QC Plan	Per QC Plan
Materials	Crack Sealer (Correct Type)	Per QC Plan	Per QC Plan	Visual Check & Check Manufacturer COC
	Crack Sealer (Consistency)	Per QC Plan	Kettle	Visual Check
	Detack Material (Correct Type)	Per QC Plan	Per QC Plan	Visual Check & Check Manufacturer COC
	Temperature of Crack Sealer	4 per Day (See Note 1)	Kettle	Check Measurement
Environmental Conditions	Underlying Surface Soundness & Moisture	Per QC Plan	Underlying Surface	Visual Check
	Temperature of Air & Underlying Surface	1 per Day (See Note 2)	Underlying Surface	Check Measurement
Workmanship	Overband Width	Per 480.43	Crack	Check Measurement
	Overband Thickness	Per 480.43	Crack	Check Measurement

1. The initial temperature measurements will be taken at start of operations and after material is added to the kettle.
2. At a minimum, the temperature measurements of the air and underlying surface shall be obtained prior to starting the crack sealer.

DEPARTMENT ACCEPTANCE

480.70: General

The Department is responsible for performing all Acceptance activities and making the final Acceptance determination for each crack filled surface. The Department's Acceptance System will include monitoring the Contractor's QC activity and performing Acceptance inspection in order to determine the Quality and corresponding payment for each Lot.

480.71: Acceptance Inspection

The Engineer will perform Acceptance inspection of all work items addressed in this specification including what is specified in Table 480.71-1.

The Engineer will inspect the crack sealing operation and record the results on IRFs.

The crack sealed surface shall meet the requirements of 480.62: Quality Control Personnel Requirements.

Table 480.71-1 – Department Acceptance Inspection of Crack Sealing Operations

Inspection Component	Inspection Attribute	Minimum Inspection Frequency	Point of Inspection	Inspection Method
Materials	Crack Sealer (Correct Type)	Per QC Plan	Per QC Plan	Visual Check & Check Manufacturer COC
	Crack Sealer (Consistency)	Per QC Plan	Kettle	Visual Check
	Detack Material (Correct Type)	Per QC Plan	Per QC Plan	Visual Check & Check Manufacturer COC
	Temperature of Crack Sealer	4 per Day (See Note 1)	Kettle	Check Measurement
Workmanship	Overband Width	Per 480.43	Crack	Check Measurement
	Overband Thickness	Per 480.43	Crack	Check Measurement
1. The initial temperature measurements will be taken at start of operations and after material is added to the kettle.				

COMPENSATION

480.80: Method of Measurement

Items 480.1 and 480.2 will be measured for payment by the Gallon, complete in place. The procedure for ascertaining the correct number of gallons used for each day's operations shall be as follows:

a) The Engineer shall measure the volume of crack sealant in the kettle before the start of the day's work. This will be done by the use of a gauge and volume chart for the heating kettle to be furnished by the Contractor.
b) Additional crack sealant, in uniformly sized containers of standard measure, shall be added to the kettle only in the presence of the Engineer.
c) At the end of the day's work the kettle shall again be gauged to ascertain the quantity remaining. The difference between the starting and finishing measurements plus the units added during the work and subsequently placed upon the roadway cracks shall be the quantity to be paid for the day.

480.81: Basis of Payment

Items 480.1 and 480.2 will be paid at the Contract unit price per Gallon, which price shall include all labor, tools, materials, equipment, and all incidental costs required to complete the work.

480.82: Payment Items

480.1	Pavement Crack Sealing - Crack Sealer	Gallon
480.2	Pavement Crack Sealing - High Performance Crack Sealer	Gallon

SUBSECTION 482: SAWCUTTING

DESCRIPTION

482.20: General

This work shall consist of the sawcutting of asphalt and concrete pavements, sidewalks and trenches where shown on the plans, and as required by the Engineer.

EQUIPMENT

482.40: General

The saw shall be capable of wet cutting to neat lines established by the Engineer. The equipment shall be approved by the Engineer prior to commencing work.

CONSTRUCTION METHODS

482.60: General

The pavement shall be sawcut through its full depth at all joints between existing and proposed pavements, and at all utility trenches, to provide a uniform, smooth vertical surface. Existing pavements shall be sawcut at the limits of work as shown on the plans and as required by the Engineer.

Sawcut edges which become broken, ragged or undermined as a result of the Contractor's operations shall be re-cut prior to the placement of abutting proposed pavement at no additional cost to the Department.

Sawcut surfaces in asphalt pavements shall be sprayed or painted with a uniform, thin coat of asphalt emulsion tack coat immediately before placement of hot mix asphalt against the cut surfaces.

COMPENSATION

482.80: Method of Measurement

Sawing pavement will be measured by the foot along the cut line.

482.81: Basis of Payment

Sawing pavement will be paid for at the respective contract unit prices per foot, which prices shall include all labor, materials and equipment necessary to perform the work.

Sawcutting will be paid separately when made in areas of full depth box widening.

Sawcuts made in existing pavement in areas of trenching for new conduit, in areas of new or reset curb, or trench limits for drainage/water work, will be included in the unit price under the respective items and will not be paid for separately under this item.

Asphalt emulsion tack coat will be paid for under Item 452. Asphalt Emulsion for Tack Coat.

482.82: Payment Items

482.3	Sawcutting Asphalt Pavement	Foot
482.4	Sawcutting Portland Cement Concrete	Foot
482.5	Sawcutting Asphalt Pavement for Box Widening	Foot

SUBSECTION 485: GRANITE RUBBLE BLOCK PAVEMENT

DESCRIPTION

485.20: General

This item of work shall consist of furnishing and setting granite rubble block pavement on a sand cushion on a concrete base course in accordance with these specifications and in close conformity with the lines and grades shown on the plans or established by the Engineer.

MATERIALS

485.40: General

Materials shall meet the requirements specified in the following Subsections of Division III. Materials:

Granite Rubble Block	M2.03.0
3,000 psi, 1.5-inch, 470 Cement Concrete	M4.02.00
Expansion and Contraction Joints	
Preformed Filler	M9.14.0
Hot Applied Crack Sealer	M3.05.2
Mortar	M4.02.15
Sand Borrow	M1.04.0, Type b

CONSTRUCTION METHODS

485.60: General

The sub-base below the concrete base course shall be fine graded and thoroughly compacted after forms are in place: it shall be placed on compacted fill as required under Subsection 401: Gravel Sub-Base.

485.61: Forms

Forms shall be placed if directed to the full depth of the combined granite rubble block, sand cushion, and concrete base. They shall be of wood, not less than nominal 2-in. thickness and dressed on all four sides. Forms shall be securely staked and braced and shall be constructed and

set so as to resist the pressure of the concrete without springing out of alignment. They shall be oiled before use.

485.62: Placing Concrete

Concrete shall be deposited with minimum rehandling and in one layer. Hand spreading and spading shall be done adjacent to forms and joints.

The concrete shall be struck off and float-finished. Protection and curing shall be done as required in Subsection 901: Cement Concrete. Placing of sand cushion and laying of granite rubble blocks shall not be done until at least 24 hours after the final curing period of the concrete base course.

The forms shall remain in place until the granite rubble blocks are laid, in order to confine the sand cushion and mortar.

485.63: Joints in Concrete

Weakened plane transverse contraction joints shall be constructed in the concrete base course every 40 ft or as shown on the plans. These joints shall consist of surface slats 2 in. deep, varying in width from ⅜ in. at top to ¼ in. at bottom.

Expansion joints shall be formed at all existing expansion joints of existing reinforced concrete surface where this surface is to be used as the base. Joints shall be ½ in. in width and shall be filled with preformed joint filler. All joints shall be sealed with joint filler compound.

485.64: Laying Blocks

Blocks shall be carefully laid on a sand cushion over the concrete foundation as shown on the plans and as directed and shall be solidly rammed in position. Joints between blocks shall be a maximum of 1.5 in. and a minimum of 1-in. in width. Blocks shall be kept perfectly clean and joints between stones shall be clean and open to the full depth of blocks until the joint is filled with mortar.

After a sufficient area of block pavement has been laid the surface shall be tested with a 10-ft straight-edge laid parallel with the centerline and any variation exceeding ⅜ in. shall be corrected and brought to proper grade.

Stones disturbed in making replacements or correcting variations shall be settled into place by carefully ramming or tampering to grade by use of a hand tamper applied upon a 2-in. plank.

Each section of block surfacing must be acceptable to the Engineer before joints in that section are filled with mortar.

485.65: Filling Joints

Mortar shall be placed and worked in such a manner as to fill the joint to a depth ½ in. below the surface. The top surface of blocks shall be kept clean of mortar stains. Immediately after the mortar joints have set sufficiently the granite block pavement shall be swept clean and any marks on the top surface removed.

COMPENSATION

485.80: Method of Measurement

Granite Rubble Block will be measured by the square yard for the work complete in place including the required excavation and materials.

485.81: Basis of Payment

This work will be paid for at the contract unit price per square yard for Granite Rubble Block Pavement, complete in place.

485.82: Payment Items

485. Granite Rubble Block Pavement .....Square Yard

SUBSECTION 486: ULTRATHIN BONDED OVERLAY

DESCRIPTION

486.10: General

This work shall consist of producing and placing Ultrathin Bonded Overlay (UTBO) as a pavement surface preservation treatment. The UTBO pavement shall be constructed on the prepared or existing base in conformance with the lines, grades, compacted thickness and typical cross section in accordance with the plans and these specifications. The UTBO pavement course shall be comprised of one of the mixture types listed in Table 486.10-1.

Table 486.10-1 - UTBO Pavement Mixture Types

Pavement Course	Mixture Type	Mixture Designation
Surface Preservation Treatment	Ultrathin Bonded Overlay - Type 1 - Polymer	UTBO-1-P
	Ultrathin Bonded Overlay - Type 2 - Polymer	UTBO-2-P
	Ultrathin Bonded Overlay - Type 3 - Polymer	UTBO-3-P
	Ultrathin Bonded Overlay - Type 2 - Asphalt Rubber	UTBO-2-AR
	Ultrathin Bonded Overlay - Type 3 - Asphalt Rubber	UTBO-3-AR

486.20: Quality Assurance

Quality Assurance shall conform to the requirements of 450.20: Quality Assurance.

MATERIALS

486.30: General

Materials shall meet the requirements in the following Subsections of Division III, Materials and as otherwise specified herein:

Modified Asphalt Binder Grades M3.01.2
Polymer Modified Emulsified Asphalt for Bond Coat M3.03.3
Warm Mix Asphalt M3.04.1
Asphalt Release Agents M3.04.2
Ultrathin Bonded Overlay M3.10.5
Hot Mix Asphalt Production Facility M3.12.0
Contractor Quality Control Laboratory M3.13.1
Department Acceptance Laboratory M3.13.2

486.32: UTBO Mix Design

UTBO mixtures shall be composed of the following: Mineral aggregate, mineral filler (if required), and Performance Graded Asphalt Binder (PGAB) as specified in 486.30: General. The Contractor shall be responsible for development of a Laboratory Trial Mix Formula (LTMF) for each UTBO mixture type specified for the contract in accordance with the requirements of 486.30: General.

CONSTRUCTION PROCEDURES

486.40: General

Prior to the start of any work activity addressed in 486.43: Preparation of Underlying Surface thru 486.52: Opening to Traffic below, a Construction Quality Meeting shall be held to review the Contractor's Quality Control system. The Contractor shall present and discuss with the Engineer in sufficient detail the specific Quality Control information and activities contained in each section of their QC Plan as outlined in 450.61: Contractor Quality Control Plan. The meeting is intended to ensure that the Contractor has an adequate Quality Control system in place and that the Contractor's personnel are fully knowledgeable of the roles and activities for which they are responsible to achieve the specified level of quality. Contractor personnel required to attend the Construction Quality Meeting include the Construction Quality Control Manager (QC Manager) and all Superintendents. The Contractor shall provide a copy of the approved QC Plan for each Contractor and Department attendee of the meeting.

486.41: Control of Grade and Cross-Section

Control of grade and cross-section shall conform to the requirements of 450.41: Control of Grade and Cross-Section.

486.42: Weather Limitations

Weather conditions shall conform to the requirements of 450.42: Weather Limitations and Table 486.42-1. Regardless of any temperature requirements, UTBO mixtures shall not be placed after October 31 or before May 1 without the written permission of the Engineer.

Table 486.42-1: Temperature Limitations for UTBO Placement

HMA Pavement Course	Lift Thickness (in.)	Minimum Air Temperature (°F)	Minimum Surface Temperature (°F)
Surface Preservation Treatment	≤ 1	50	55

486.43: Preparation of Underlying Surface

The preparation of the underlying pavement surface shall conform to the requirements of 450.43: Preparation of Underlying Surface and the following.

A. Crack Sealing

Crack sealing, when specified, shall conform to the requirements of Subsection 480: Pavement Crack Sealing.

B. Asphalt Emulsion for Bond Coat

A polymer modified bond coat of asphalt emulsion, meeting the requirements of 486.30: General shall be uniformly applied to existing or new pavement surfaces prior to placing the UTBO as specified below. The existing surface shall be swept clean of all foreign matter and loose material using a mechanical sweeper and shall be dry before the bond coat is applied.

(1) Bond Coat Distributor System

A self-priming paver, manufactured for paver-placed surface treatments, shall be used to apply the bond coat. The bond coat distributor system shall be equipped with the following to control and monitor the application:

- System for heating the asphalt emulsion uniformly to specified temperature.
- The paver emulsion tank shall have a 1,500 gallon capacity.
- Thermometer for measuring the asphalt emulsion temperature.
- Adjustable full circulation spray bar, configured to cover the entire paving width, including behind paver tracks.
- Positive controls including tachometer, pressure gauge, volume measuring device, and ground speed controls to regulate bond coat application rate.
- The spray bar shall be adjusted so that it is at the proper height above the pavement surface to provide a uniform coverage of the pavement surface.
- All nozzles on the distributor spray bar shall be open and functioning. All nozzles shall be turned at the same angle to the spray bar. The nozzles shall be offset at an angle from the spray bar to prevent the fan from one nozzle from interfering with the fan from another. Proper nozzle angle shall be as determined by the Manufacturer of the distributor spray bar.

At least once every 12 months the application rate of the bond coat distributor system shall be calibrated by the Contractor using the appropriate spray bar nozzle size(s). The calibration shall be in the transverse and longitudinal directions following ASTM D2995. The calibration shall address the spray bar height, nozzle angle, spray bar pressure, thermometers, and strapping stick. Documentation of the annual calibration shall be kept with the bond coat distributor system and shall be provided to the Engineer when requested.

(2) Bond Coat Application Requirements

Bond coat application shall be in accordance with the following:

a) Apply the bond coat at a temperature of 140°F - 160°F.
b) Provide a uniform application across the entire width to be overlaid, at a rate of 0.18 - 0.22 gallons per square yard. The target application rate shall be within this range and established in the QC Plan. The target application rate may be adjusted based on field conditions encountered when agreed upon by the Contractor and Engineer.
c) The bond coat application rate shall be continuously monitored and shall be applied to cover a minimum of 95% of the pavement surface.

In addition to the requirements above, all vertical surfaces of curbs, edging, utilities, and drainage structures that will be abutted by new pavement shall receive a thorough bond coat application immediately prior to placing the UTBO pavement course.

(3) Bond Coat Inspection

The asphalt emulsion temperature and application rate shall be periodically measured and properly recorded by the Contractor on NETTCP Inspection Report Forms. If the temperature or application rate is determined to not be in conformance with the specification requirements above, the Contractor shall make appropriate adjustments to the bond coat application operations.

486.44: Zero Tolerance for Use of Petroleum Products as Release Agents

The use of petroleum-based products as release agents shall not be permitted in accordance with 450.44: Zero Tolerance for Use of Petroleum Products as Release Agents.

486.45: UTBO Production

UTBO production shall conform to the requirements of 486.30: General.

486.46: UTBO Transportation and Delivery

UTBO shall be transported and delivered to the project in accordance with 450.46: Hot Mix Asphalt Transportation and Delivery.

486.47: UTBO Placement

UTBO placement shall conform to the requirements of 450.47: Hot Mix Asphalt Placement and the following.

A. Material Transfer Vehicle

A Material transfer vehicle shall be required for all UTBO placements and shall conform to the requirements of 450.47: Hot Mix Asphalt Placement, Part A.

B. Pavers

Pavers shall conform to the requirements of 450.47: Hot Mix Asphalt Placement, Part B and the following:

The self-priming paver must be capable of spraying the bond coat and placing the UTBO mixture in one pass. The self-priming paver must incorporate a receiving hopper, feed conveyor, insulated storage tank for emulsion, metered bond coat spray bar and a variable width, heated screed. The metered bond coat spray bar must adjust automatically to the full width of the screed. The screed must have the ability to be crowned at the center both positively and negatively and have vertically adjustable extensions to accommodate the desired pavement profile.

486.48: UTBO Compaction

Compaction of the UTBO pavement shall conform to the requirements of 450.48: Hot Mix Asphalt Compaction and the following. Compaction shall begin immediately after the placement and shall consist of a minimum of 2 passes with an adequate number of rollers to complete compaction before the pavement temperature falls below 185°F.

The UTBO mixture shall be protected from traffic until the rolling operation is complete and the material has cooled sufficiently to resist damage.

486.49: UTBO Joints

Construction of the UTBO joints shall conform to the requirements of 450.49: Hot Mix Asphalt Joints.

486.51: UTBO Mix Design Verification and Control Strip Requirements

The UTBO mix design shall be verified and a Control Strip placed in accordance with 450.51: HMA Mix Design Verification and Control Strip Requirements and the following.

A. Laboratory Verification of UTBO Mix Design

The Contractor shall develop and submit a Laboratory Trial Mix Formula (LTMF) for each UTBO mixture type, which is to be proposed as a Job Mix Formula, a minimum of 60 days prior to the start of UTBO production in accordance with the requirements of 486.30: General and MassDOT's Asphalt Mix Design approval process. The Contractor shall not proceed to UTBO production for the Control Strip as outlined below until the LTMF is verified by the Department.

B. UTBO Control Strip

A UTBO Control Strip shall be placed in accordance with 450.51: HMA Mix Design Verification and Control Strip Requirements, Part B and shall consist of a minimum of 600 tons of UTBO but not more than 1,200 tons. The Control Strip shall meet the requirements of 450.51: HMA Mix Design Verification and Control Strip Requirements, Part B and the following.

(1) Control Strip Sampling and Testing

The Contractor and the Department shall independently sample and test the Control Strip Lot for the Quality Characteristics identified in Table 486.51-1. The Contractor and the Department shall independently sample and test each Sublot produced and placed. Each Contractor QC sample and each Agency Acceptance sample shall be randomly obtained from each Sublot in accordance with 450.65: Quality Control Sampling and Testing Requirements, Part A and the prescribed sampling protocols for each Quality Characteristic as outlined in 450.65: Quality Control Sampling and Testing Requirements, Part F. Split samples shall be retained for each Sublot by both the Contractor

and the Department in accordance with 450.65: Quality Control Sampling and Testing Requirements, Part D.

Table 486.51-1: Control Strip Quality Limits

Quality Characteristic	Target	Specification Limits		Engineering Limits		Acceptance Limit
		LSL	USL	LEL	UEL	
PG Asphalt Binder Grading	Per Binder Grade specified	N/A	N/A	Per M3.02.1	Per M3.02.1	N/A
PG Asphalt Binder Content (UTBO-P)	Per LTMF	Target – 0.3%	Target + 0.3%	Target – 0.4%	Target + 0.4%	≥70 PWL
PG Asphalt Binder Content (UTBO-AR)	Per LTMF	Target – 0.4%	Target + 0.4%	Target – 0.6%	Target + 0.6%	≥70 PWL
Combined Gradation: Passing #4 (4.75mm) and Larger Sieves	Per LTMF	N/A	N/A	Target – 7%	Target + 7%	N/A
Combined Gradation: Passing #8 (2.36mm) Sieve	Per LTMF	N/A	N/A	Target – 5%	Target + 5%	N/A
Combined Gradation: Passing #16 (1.18mm) to #50 (300µm) Sieve	Per LTMF	N/A	N/A	Target – 4%	Target + 4%	N/A
Combined Gradation: Passing #100 (150µm) Sieve	Per LTMF	N/A	N/A	Target – 3%	Target + 3%	N/A
Combined Gradation: Passing #200 (75µm) Sieve	Per LTMF	N/A	N/A	Target – 1.5%	Target + 1.5%	N/A
Ride Quality: Posted Speed Limit ≥55 mph	65 in./mi	N/A	85 in./mi	N/A	100 in./mi	≥70 PWL
Ride Quality: Posted Speed Limit ≥40 but <55 mph	75 in./mi	N/A	95 in./mi	N/A	110 in./mi	≥70 PWL

486.52: Opening to Traffic

Vehicular traffic or loads shall only be permitted on the newly completed UTBO pavement once the requirements of 450.52: Opening to Traffic are met.

CONTRACTOR QUALITY CONTROL

486.60: General

The Contractor shall provide a Quality Control System (QC System) and, when required, a QC Plan, adequate to ensure that all materials and workmanship meet the required quality levels for each specified Quality Characteristic. The Contractor shall provide qualified QC personnel and QC

laboratory facilities and perform Quality Control inspection, sampling, testing, data analysis, corrective action (when necessary), and documentation as outlined further below.

486.61: Contractor Quality Control Plan

The Contractor shall prepare and implement a Construction QC Plan in accordance with the requirements of 450.61: Contractor Quality Control Plan.

486.62: Quality Control Personnel Requirements

The Contractor shall provide qualified QC personnel in accordance with the requirements of 450.62: Quality Control Personnel Requirements.

486.63: Quality Control Laboratory Facility Requirements

The Contractor shall maintain a QC laboratory in accordance with the requirements of 450.63: Quality Control Laboratory Facility Requirements.

486.64: Quality Control Inspection

The Contractor shall perform QC inspection in accordance with the requirements of 450.64: Quality Control Inspection and Table 486.64-1.

Table 486.64-1: Minimum QC Inspection at UTBO Placement Location

Inspection Component	Inspection Attribute	Minimum Inspection Frequency	Point of Inspection	Inspection Method
Equipment	As specified in QC Plan	Per QC Plan	Per QC Plan	Per QC Plan
Materials	Temperature of Delivered UTBO Mix	4 per Day (See Note 1)	From Haul Vehicle or Paver Hopper	Check Measurement
Environmental Conditions	Underlying Surface Soundness & Moisture	Per QC Plan	Underlying Surface	Visual Check
	Temperature of Air & Underlying Surface	1 per Day (See Note 2)	At Paving Site	Check Measurement
Workmanship	Joint Location & Alignment	Per QC Plan	Per QC Plan	Visual Check
	Sawcut Joint Vertical Face	Per QC Plan	Joint Vertical Face	Visual Check
	Temperature Differential in UTBO Mat	Once per 500 ft per pavement course	UTBO Mat Behind Paver	Per 450.47: Hot Mix Asphalt Placement, Part D
	Physical Segregation	Per QC Plan	UTBO Mat Behind Paver & Compacted HMA	Visual Check
	UTBO Lift Thickness	Per QC Plan	UTBO Lift	Check Measurement
	UTBO Yield (See Note 3)	Per QC Plan	Compacted UTBO Area	Check Measurement
	Cross-Slope	Per QC Plan	Compacted UTBO	Check Measurement
	Joint Tightness	Per QC Plan	Compacted UTBO	Visual Check
	Joint Surface Deviations	Once per 500 ft per joint	At Finished Joint	10-ft standard straightedge
	Wheel Path Deviations	Once per 2,000 ft per Wheel Path	Wheel Path	10-ft standard straightedge

Note 1: The initial temperature measurements will be taken from the first or second load.
Note 2: At a minimum, the temperature measurements of the air and underlying surface shall be obtained prior to starting the UTBO placement.
Note 3: The calculated yield shall be compared to the estimated yield based on the UTBO unit weight established with the approved LTMF.

486.65: Quality Control Sampling and Testing Requirements.

The Contractor shall perform QC sampling and testing in accordance with the requirements of 450.65: Quality Control Sampling and Testing Requirements and the following.

A. Quality Control Testing of UTBO Lots.

The Contractor's QC personnel will perform Quality Control testing at both the UTBO production facility and at the site of UTBO field placement to ensure that the production and placement processes are providing work conforming to the contract requirements. The Engineer shall be provided the opportunity to monitor and witness all QC testing of UTBO. All QC testing of UTBO Lots shall be in accordance with the current AASHTO, ASTM, NETTCP, or Department test methods specified in Table 486.65-1 and the procedures outlined in 450.65: Quality Control Sampling and Testing Requirements, Part F.

Table 486.65-1: Minimum Quality Control Sampling & Testing of UTBO Lots

Quality Characteristic	Test Method(s)	Sublot Size	Minimum Test Frequency	Point of Sampling	Sampling Method
PG Asphalt Binder Grading	Per Binder Grade Specification	Per Supplier QC Plan or 24,000 tons of UTBO per 450.65: Quality Control Sampling and Testing Requirements, Part F(1)	See 450.65: Quality Control Sampling and Testing Requirements, Part F(1)	See 450.65: Quality Control Sampling and Testing Requirements, Part F(1)	Random AASHTO R 66
Aggregate Gradation	AASHTO T 27	Per QC Plan	Per QC Plan	At HMA Plant Per QC Plan	Random AASHTO R 90
PG Asphalt Binder Content	AASHTO T 308	300 tons	1 per Sublot (See Note 1)	From Haul Vehicle at Plant	Random AASHTO R 97 and R 47
Combined Aggregate Gradation	AASHTO T 30	300 tons	1 per Sublot (See Note 1)	From Haul Vehicle at Plant	Random AASHTO R 97 and R 47
Ride Quality (IRI)	AASHTO R 54 Per 450.65: Quality Control Sampling and Testing Requirements, Part F(11)	0.1 miles per each Wheel Path	3 Runs per Sublot	Each Pavement Course Per 450.65: Quality Control Sampling and Testing Requirements, Part F(11)	Random Per 450.65: Quality Control Sampling and Testing Requirements, Part F(11)
Note 1: In the event that the total daily UTBO production is less than one Sublot, a minimum of one random QC sample shall be obtained for the day's production.					

(1) Ride Quality.

The Contractor shall perform QC testing of Ride Quality in accordance with the requirements of 450.65: Quality Control Sampling and Testing Requirements, Part F(11), however lift thicknesses less than 1.50 in. shall be subject to Ride Quality testing.

486.66: Quality Control Documentation and Data Evaluation

The Contractor shall document and evaluate all QC inspection and testing data in accordance with the requirements of 450.66: Quality Control Documentation and Data Evaluation.

486.67: Corrective Action

The Contractor shall implement corrective action for any part of a Lot that is determined by inspection or testing to not be in conformance with the quality requirements specified in accordance with the requirements of 450.67: Corrective Action.

486.68: Quality Control Records System.

The Contractor shall maintain a Quality Control records system in accordance with the requirements of 450.68: Quality Control Records System.

DEPARTMENT ACCEPTANCE

486.70: General

The Department is responsible for performing all Acceptance activities and making the final Acceptance determination for each UTBO Lot produced and placed. The Department's Acceptance system will include monitoring the Contractor's QC activity and performing Acceptance inspection, sampling and testing in order to determine the Quality and corresponding payment for each Lot. These activities will be performed for each UTBO Lot Category (Lot Category A, B, and C) as outlined further below.

486.71: Acceptance System Approach

Department Acceptance of each UTBO Lot will be based on an evaluation of the Department's Acceptance inspection information and testing data in accordance with the requirements of 450.71: Acceptance System Approach.

486.72: Department Monitoring of Contractor Quality Control

The Department will monitor the Contractor's QC System to confirm that QC activities are being performed for each Lot in compliance with this specification and the approved QC Plan in accordance with the requirements of 450.72: Department Monitoring of Contractor Quality Control.

486.73: Acceptance Inspection

The Engineer will perform Acceptance inspection of all work items addressed under this specification to ensure that all materials and completed work are in conformance with the requirements of 450.73: Acceptance Inspection.

486.74: Acceptance Sampling & Testing

The Department will perform Acceptance sampling and testing in accordance with the requirements of 450.74: Acceptance Sampling & Testing and the following.

A. Acceptance Testing of UTBO Lots

The Department will perform Acceptance testing using the random samples obtained in accordance with 450.74: Acceptance Sampling & Testing, Part A from the HMA production facility and at the

site of UTBO field placement. The specific Quality Characteristics subject to Department Acceptance testing are identified in Table 486.74-1. All Acceptance testing of UTBO Lots will be performed by the Engineer in accordance with the AASHTO, ASTM, NETTCP, or Department test methods specified in Table 486.74-1 and the procedures outlined in 450.74: Acceptance Sampling & Testing, Part F. The Engineer will furnish a copy of all Department Acceptance test results/data to the Contractor within 5 days following completion of testing.

Table 486.74-1: Department Acceptance Sampling and Testing of UTBO Lots

Quality Characteristic	Test Method(s)	Sublot Size	Minimum Test Frequency	Point of Sampling	Sampling Method
PG Asphalt Binder Grading	Per Binder Grade Specification	12,000 tons of HMA using same PG Grade	1 per Sublot	From In-line Sample Valve at HMA Plant	Random AASHTO R 66
PG Asphalt Binder Content	AASHTO T 308	300 tons	1 per Sublot sampled per 450.74: Acceptance Sampling & Testing (See Note 1)	From Haul Vehicle at HMA Plant	Random AASHTO R97 and R 47
Combined Aggregate Gradation	AASHTO T 30	300 tons	1 per Sublot sampled per 450.74: Acceptance Sampling & Testing (See Note 1)	From Haul Vehicle at HMA Plant	Random AASHTO R97 and R 47
Ride Quality (IRI)	AASHTO R54 per 450.65: Quality Control Sampling and Testing Requirements, Part F(11)	0.1 miles per each Wheel Path	1 Per Sublot	Each Pavement Course per 450.65: Quality Control Sampling and Testing Requirements, Part F(11)	Random per 450.65: Quality Control Sampling and Testing Requirements, Part F(11)
Note 1: In the event that the total daily UTBO production is less than one Sublot but greater than 150 tons, a minimum of one random Acceptance sample shall be obtained for the day's production.					

(1) Ride Quality.

The Department will perform Acceptance testing of Ride Quality in accordance with the requirements of 450.74: Acceptance Sampling & Testing, Part F(7) however lift thicknesses less than 1.50 in. shall be subject to Ride Quality testing.

486.75: Split Sample Correlation

When Validated Contractor QC test data is to be included in the acceptance determination, Split Sample Correlation shall be performed by the Department and Contractor in accordance with the requirements of 450.75: Split Sample Correction and the following. Split Sample Correlation will be performed on split material samples for those Quality Characteristics identified in Table 486.75-1.

Table 486.75-1: Split Sample Correlation Allowable Differences

Quality Characteristic	Test Method(s)	Allowable Difference Between Contractor and Department Split Samples (d2s)
PG Asphalt Binder Content	AASHTO T 308	± 0.35
Ride Quality (IRI)	AASHTO R 56	Per 450.65: Quality Control Sampling and Testing Requirements, Part F(11)(d)

486.76: Lot Acceptance Determination Based on Inspection Results

The Department's Acceptance Inspection results will be used in the final acceptance determination for all UTBO Lots (Lot Category A, B, and C). The materials and product workmanship for the completed work will be evaluated for conformance with the plans and the requirements specified in 486.43: Preparation of Underlying Surface thru 486.52: Opening to Traffic and in accordance with the requirements of 450.76: Lot Acceptance Determination Based on Inspection Results.

486.77: Lot Acceptance Determination Based on Testing Data

Lot Acceptance determination based on testing data will be performed in accordance with the requirements of 450.77: Lot Acceptance Determination Based on Testing Data and the following. The Department's Acceptance data and all Validated Contractor QC data will be evaluated using the Quality Limits specified in Table 486.77-1.

Table 486.77-1: Quality Limits for Acceptance of UTBO Lots

Quality Characteristic	Target	Specification Limits		Engineering Limits		Acceptance Limit
		LSL	USL	LEL	UEL	
PG Asphalt Binder Grading	Per Binder Grade specified	N/A	N/A	Per M3.01.0	Per M3.01.0	N/A
PG Asphalt Binder Content (UTBO-P)	Per JMF	Target – 0.3%	Target + 0.3%	Target – 0.4%	Target + 0.4%	60 PWL
PG Asphalt Binder Content (UTBO-AR)	Per JMF	Target – 0.4%	Target + 0.4%	Target – 0.6%	Target + 0.6%	60 PWL
Ride Quality: Posted Speed Limit ≥55 mph (See Note 1)	65 in./mi	N/A	85 in./mi	N/A	100 in./mi	60 PWL
Ride Quality: Posted Speed Limit ≥40 but <55 mph (See Note 1)	75 in./mi	N/A	95 in./mi	N/A	110 in./mi	60 PWL
Note 1: Projects with posted speed limits that fall into more than one of the Posted Speed Limit ranges above will be divided into multiple Lots and evaluated separately.						

486.78: Quality Level Analysis Procedures.

For each Quality Characteristic subject to analysis of Lot Quality Level, QLA will be used to determine the percentage of the Lot that is within the Specification Limits in accordance with the requirements of 450.78: Quality Level Analysis Procedures.

DISPUTE RESOLUTION

The Contractor or the Department may dispute any of the test values that are utilized in the acceptance determination for a given Lot in accordance with the requirements of 450.80: Disputable Items thru 450.84: Final Disposition.

COMPENSATION

486.90: Method of Measurement

A. Patching

HMA for Patching will be measured for payment by the ton and shall be the actual quantity complete, in place and accepted by the Engineer.

B. Bond Coat

Asphalt Emulsion for Bond Coat – Polymer Modified, as required by the plans or these specifications, will be measured by the gallon.

C. Ultrathin Bonded Overlay

UTBO mixtures will be measured by the square yard and shall be the actual pavement course quantity complete, in place, and accepted by the Engineer.

486.91: Basis of Payment

A. Patching

HMA for Patching will be paid for at the contract unit price per ton of the HMA mixture type specified under Pay Item 451. Payment shall include all sawcutting, removal of existing distressed or unsound pavement, applying hot applied pavement joint adhesive to vertical faces, applying the tack coat to all required surfaces at the specified rate, and transportation, delivery, placement, and compaction of HMA for Patching.

B. Ultrathin Bonded Overlay

Each UTBO course will be paid for at the contract unit price per square yard of in-place mixture under the UTBO Pay Items specified (Pay Items 486.1 through 486.5). Payment shall include sweeping the underlying surface, transportation, delivery, placement (including providing an MTV when required), and compaction of each UTBO pavement course. Payment shall also include the emulsion for bond coat and its application to all required surfaces at the specified rate.

Mobile lighting for nighttime milling and paving is considered incidental to the cost of each UTBO pavement course placed.

All sawcutting required for transverse joints or longitudinal joints shall also be included in the contract unit price for each HMA pavement course. All required sawcutting in the existing pavement in accordance with this specification will be included in the contract unit price for each UTBO pavement course.

C. Contractor Quality Control

The Contractor's Quality Control system will be considered incidental to the work and shall be included in the Contract unit price for each UTBO pavement course. No separate payment will be made for any assistance provided by the Contractor to the Engineer in obtaining Department Acceptance samples. Failure of the Contractor to perform adequate Quality Control in accordance with the specifications and the Contractor's approved QC Plan will be justification for withholding payment.

486.92: Pay Adjustment (PA)

Payment for each UTBO Category A Lot and Category B Lot will be determined based on the final Lot Quality Level (PWL) computed in accordance with the QLA procedures. Pay adjustments will be determined for each of the Acceptance Quality Characteristics identified in Table 486.92-1. The relative pay adjustment weight assigned to each of the UTBO Quality Characteristics is indicated in Table 486.92-1.

Table 486.92-1: Pay Adjustment Weight Assigned to UTBO Quality Characteristics

UTBO Quality Characteristic	Pay Adjustment Weight
PG Asphalt Binder Content	35 percent
Ride Quality (IRI)	65 percent

486.93: Payment Items

451.	HMA for Patching	Ton
486.1	Ultrathin Bonded Overlay - Type 1 - Polymer	Square Yard
486.2	Ultrathin Bonded Overlay - Type 2 - Polymer	Square Yard
486.3	Ultrathin Bonded Overlay - Type 3 - Polymer	Square Yard
486.4	Ultrathin Bonded Overlay - Type 2 - Asphalt Rubber	Square Yard
486.5	Ultrathin Bonded Overlay - Type 3 - Asphalt Rubber	Square Yard
999.490	HMA Pay Adjustment – PG Asphalt Binder Content[1]	Dollar
999.494	HMA Pay Adjustment –Ride Quality[1]	Dollar

[1]Not a bid item.

SECTION 500: CURB AND EDGING

SUBSECTION 501: CURB, CURB INLETS, CURB CORNERS AND EDGING

DESCRIPTION

501.20: General

This item of work shall consist of furnishing and setting curb, curb inlets, curb corners and edging on a gravel foundation except for bridge curb which is set in full mortar bed and hot mix asphalt curb which is placed on a hot mix asphalt base, in accordance with these specifications and in close conformity with the lines and grades shown on the plans or established by the Engineer.

MATERIALS

501.40: General

Materials shall conform to the requirements specified in the following Subsection of Division III, Materials:

- Granite Curb M9.04.1
- Granite Curb Inlets M9.04.5
- Granite Curb Corners M9.04.6
- Granite Edging M9.04.2
- Mortar M4.02.15
- Gravel ..... M1.03.0, Type c
- Anchors M8.01.0
- Cement Concrete Precast Units M4.02.14
- Joint Material
  - Tar Paper M9.06.2
  - Preformed Expansion Joint Filler M9.14.0
- HMA for Driveways, Sidewalks, Berm and Curb M3.07.0
- Cement Concrete M4.02.00
- Liquid Concrete Penetrant/Sealer M9.15.0

CONSTRUCTION METHODS

501.60: Excavating Trench

The trench for the curb shall be excavated to a width of 18 in. The subgrade of the trench shall be a depth below the proposed finished grade of the curb equal to 6 in. plus the depth of the curbstone.

Existing pavements shall be sawcut in accordance with the requirements of Subsection 482: Sawcutting as shown on the plans and as required by the Engineer.

501.61: Preparing Foundation

The foundation for the curb shall consist of gravel spread upon the subgrade and after being thoroughly compacted by tamping shall be 6 in. in depth.

The gravel foundation for edging shall be as shown on the plans and shall be thoroughly rammed or tamped until firm and unyielding.

The foundation for the curb inlet shall consist of a full bed of Portland cement mortar on the supporting back wall of the catch basin or gutter inlet and sufficient gravel on each side to support the overhang. The trench for the gravel foundation shall be at least 6 in. in depth and 18 in. in width. This trench shall be filled with gravel thoroughly tamped to the required grade.

The trench for the curb corner shall be excavated so that there shall be constructed a foundation of gravel which when thoroughly compacted will be 6 inches in depth, and extending 6 in. beyond the front and back of curb corner to the full depth of foundation. Other acceptable material may be used for backing.

501.62: Setting Curb and Edging

Curbing, curb corners or edging shall be set on additional gravel spread upon the foundation.

All spaces under the curb, curb corners or edging shall be filled with gravel thoroughly compacted so that the curb, curb corners or edging will be completely supported throughout their length. The curb shall be set at the line and grade required as shown on the plans.

Curb, curb corners or edging shall be fitted together as closely as possible except for VA5 curb which shall not fit closer to each other than ¼ in.

If curb, curb corners, curb inlets or edging of different quarries is used on the same project, curbing of each particular quarry shall be segregated and set to give uniform appearance.

501.63: Concrete Curb, Corners, and Edging

A. General

The curb shall consist of concrete castings molded in place in sections 6 ft long, 24 in. in depth, 6 in. in width at the top, and 7 in. in width at the bottom and with front vertical face. The top front edge of curb shall be rounded to ¾-in. radius. The ends of curb sections shall be chamfered ¼ in.

The edging shall consist of concrete castings conforming to the size and dimensions shown on plans. Straight edging shall be cast in lengths of 4 ft. Edging for curves with radii-300 ft or less shall be straight edging but shall be cast in lengths less than 4 ft in order to avoid angles at joints. The ends of all edging shall be normal to the line of face. The edges of edging face shall be chamfered ¼ in.

Corners shall match the adjacent curb in size, color and finish. The front arris line shall extend through ¼ of a circle having a radius of 2 ft or 3 ft respectively for Type A or Type B curb comer. The back arris line shall be straight. The plan of the back shall be normal to the top.

All forms shall be set true to lines and grades indicated on plans and as directed and held rigidly in proper position. They shall be either of metal or of acceptable planed and matched lumber of such construction that a smooth surface will be provided.

Expansion joints shall be formed at the intervals shown on the plans using preformed expansion joint filler having a thickness of ½ in. When curb is constructed adjacent to or on concrete pavement, expansion joints hall be located opposite or at expansion joints in the pavement.

B. Mixing and Placing Concrete.

The concrete shall be of such consistency and be so spaded and worked that a smooth mortar face will be produced.

C. Protection, Curing and Finishing of Concrete.

1. Protection. The forms shall be left in place for 24 hours or as directed until the concrete has set sufficiently so that they can be removed without injury to the castings. Particular care will be required to prevent any discoloration of the exposed surface.
2. Curing. When the concrete has hardened sufficiently the concrete shall be covered with acceptable burlap or other approved material and kept wet for 3 days or longer. Under extreme weather or other particular conditions proper curing shall be carried out as directed.
3. Finishing. The castings shall, immediately upon removal of the forms, be rubbed down to a smooth and uniform surface, but no plastering will be allowed. For this work a competent and skillful finisher shall be employed.
4. Protective Coating. The Concrete Penetrant/Sealer shall conform to the requirements of M9.15.0: Liquid Penetrant/Sealant. After the concrete is at least 14 days old and after a 48-hour minimum drying period (a longer period shall be required if castings do not appear dry) just prior to the time of treatment, the exposed surface shall be cleaned to remove all oil, grime and loose particles which would prevent the mixture from penetrating the concrete. immediately before the application of the mixture, an air blast shall be directed over the surface to be treated so that all dust will be removed. The temperature of the concrete and air shall be 50°F or higher at the time of application. For rate of application see M4.02.14: Precast Units, Paragraph D.

The second application of the surface treatment mixture shall not be made until the concrete, in the judgement of the Engineer, has regained its dry appearance.

Traffic shall be prohibited from the area until the concrete has regained its dry appearance.

501.64: Hot Mix Asphalt Curb

The HMA mixture shall be placed and compacted with a machine acceptable and approved by the Engineer. The machine shall be capable of spreading the mixture true to line and grade and to the shape stipulated.

The HMA curb shall be placed as shown in the current Department Standards.

If at any time before the acceptance of the work any soft or imperfect spots develop in the exposed surface of the curb, such material placed shall be removed and replaced with new-material and compacted, without additional compensation.

501.65: Filling About Trench

After the curb, curb corners, curb inlets, and edging is set, the space between it and the wall of the trench shall be filled with gravel thoroughly tamped to the depth directed, care being taken not to affect the line or grade of the curb, curb corners, curb inlets and edging.

501.66: Bridge Curb

On bridges, after the concrete base has set and before the concrete in back of the curb is placed, Type VA5 curb shall be set to line and grade in full mortar beds and full mortar end joints with the anchors in the stone grouted in place.

Each curb shall be brushed clean and free from loose particles, and thoroughly wetted with clean, fresh water before setting. The stone shall be carefully bedded in a full bed of mortar and in such a way as not to slide the stone on the mortar bed.

Each stone shall be held securely in position by 2 steel anchors. The anchors shall be of the required dimensions and shapes and shall extend 3 in. into the curb and 6 in. into the concrete. Care shall be taken in placing the concrete in back of the curb to avoid disturbing the line or grade of the curb.

Wherever plans indicate a construction joint in the sidewalk, or paraffin joint in coping, the curb shall be laid out so that a joint in the curb will be opposite the joint in the sidewalk, or coping.

501.67: Pointing

The joints between curbstones (both front and back) or edging shall be carefully filled with cement mortar and neatly pointed on the top and front exposed portions. After pointing, the curbstones or edging shall be satisfactorily cleaned of all excess mortar that may have been forced out of the joints.

501.68: Transition Curb for Pedestrian Curb Ramps

Transitions from normal curb settings to pedestrian curb ramps shall be accomplished with transition curb as directed. Transitions shall be of the same type curb and similar to that abutting and, if on a curve, of the same radius.

COMPENSATION

501.80: Method of Measurement

The length of curb (except hot mix asphalt curb) and edging shall be as measured along the front arris of the curb and edging, except that where the edging is set on a curve having a radius of 10 ft or less, the measurement will be made along the edging at the lowest exposed level after completion of shoulder or pavement.

The quantity of hot mix asphalt curb to be paid for will be the length actually measured along curb at its lowest exposed edge.

Each curb corner and curb inlet set, complete in place, will be considered one unit.

501.81: Basis of Payment

Curb or edging will be paid for at the contract unit price per foot, complete in place which shall include sawcuts made in existing pavement, cement concrete placed to set the curb or edging and all other work necessary to complete the installation.

Curved granite curb shall include all curb (except curb corners), cut to specified radius and set on curve.

The steel anchors used with Type VA5 curb will be paid for under the Item for VA5 curb.

Where granite edging is set on a curve having a radius of 10 ft or less the work will be paid for at the contract unit price per foot, complete in place, under the respective item for the particular type of edging required.

Curb inlets will be paid for at the contract unit price each under the respective item for the particular type of inlet, either straight or curved, complete in place.

All curb corners will be paid for at the contract unit price for each, under the item for the particular type of corner required, complete in place.

The initial excavation, except Class A Rock Excavation, when done in conjunction with excavation for sub-base will be paid for under the appropriate excavation item. The price of the curbing will include compensation for any other required excavation.

Gravel borrow for the foundations and backfilling will be paid for at the contract unit price per cubic yard under the item for Gravel Borrow.

Rock excavation, if necessary, will be paid for at the contract unit price per cubic yard under the item for Class A Rock Excavation.

501.82: Payment Items

501.	Granite Curb Type VA1-Straight	Foot
501.1	Granite Curb Type VA1-Curved	Foot
502.	Granite Curb Type VA2-Straight	Foot
502.1	Granite Curb Type VA2-Curved	Foot
503.	Granite Curb Type VA3-Straight	Foot
503.1	Granite Curb Type VA3-Curved	Foot
504.	Granite Curb Type VA4-Straight	Foot
504.1	Granite Curb Type VA4-Curved	Foot
505.	Granite Curb Type VA5-Straight	Foot
505.1	Granite Curb Type VA5-Curved	Foot
506.	Granite Curb Type VB-Straight	Foot
506.1	Granite Curb Type VB-Curved	Foot
509.	Granite Transition Curb for Pedestrian Curb Ramps-Straight	Foot
509.1	Granite Transition Curb for Pedestrian Curb Ramps-Curved	Foot
510.	Granite Edging Type SA	Foot
510.1	Granite Edging Type SA (Radius 10 Feet or less)	Foot
511.1	Granite Edging Type SB-Straight	Foot
512.1	Granite Edging Type SB (Radius 10 Feet or less)	Foot
513.	Granite Edging Type SC	Foot
513.1	Granite Edging Type SC (Radius 10 Feet or less)	Foot
514.	Granite Curb Inlet-Straight	Each
515.	Granite Curb Inlet-Curved	Each
516.	Granite Curb Corner Type A	Each
517.	Granite Curb Corner Type B	Each
520.	Concrete Curb Type VA	Foot
521.	Concrete Curb Corner Type A	Each
521.1	Concrete Curb Corner Type B	Each
522.	Concrete Edging Type SA	Foot
570.1	Hot Mix Asphalt Curb Type 1	Foot
570.2	Hot Mix Asphalt Curb Type 2	Foot
570.3	Hot Mix Asphalt Curb Type 3	Foot

SUBSECTION 580: CURB OR EDGING REMOVED AND RESET; REMOVED AND STACKED OR REMOVED AND DISCARDED

DESCRIPTION

580.20: General

This work shall consist of removing the present curb, edging, curb corners and curb inlets of every type and cross section made of granite, concrete or granite-faced and resetting or stacking them or discarding them in accordance with these specifications and in close conformity with the lines and grades shown on the plans or established by the Engineer.

MATERIALS

580.40: Curb Edging, Curb Inlets and Curb Corners

Curb, edging, curb inlets and curb corners shall consist of so much of the same as is suitable, in the Engineer's judgment to be reset or stacked.

580.41: Gravel

Gravel shall conform to the requirements of M1.03.0: Gravel Borrow Type c.

CONSTRUCTION METHODS

580.60: Removal

A trench of sufficient width and depth shall be excavated so that the present curb, edging, curb corners and curb inlets can be removed without damage.

Existing pavements shall be sawcut in accordance with the requirements of Subsection 482: Sawcutting as shown on the plans and as required by the Engineer.

580.61: Protection

The Contractor shall protect all curb or edging and keep it in satisfactory condition until the acceptance of the entire contract. Particular care will be required to prevent any unsatisfactory discoloration of the curb or edging. The Contractor shall replace any existing curb, edging, curb corners and curb inlets that is to be reset, which is lost or damaged as a result of their operations, or because of their failure to store and protect it in a manner that would eliminate its loss or damage.

580.62: Adjustment

The length of any section of curb or edging, shall be altered by cutting in order to fit closures as necessary. The ends of all stones shall be square with the planes of the top and face so that when the stones are placed end-to-end as closely as possible no space shall show in the joint at the top and face of more than ¾ in. for the full width of the top and for 8 in. down on the face.

580.63: Relaying

The Construction methods for resetting all curbing or edging, in the final location shall conform to the requirements of 501.60: Excavating Trench to 501.62: Setting Curb and Edging, 501.65: Filling About Trench, and 501.67: Pointing.

580.64: Stacking

The Contractor shall accept and hold entire responsibility for the removal, handling, stacking at a location convenient for removal by owner, and protection of all curbing or edging until its final removal as designated in accordance with the following:

Any curbing or edging damaged through lack of protection or carelessness by the Contractor shall be replaced at their expense. The Contractor's responsibility will cease upon final acceptance of the work or 60 days from the time a certified notice, with copy to the Engineer, is sent by Contractor to owner of material that all material is available for removal.

580.65: Discarding

Any curb, edging, curb corners and curb inlets not damaged through lack of protection or carelessness by the Contractor but deemed by the Engineer as unsatisfactory for relaying or stacking, will be discarded. It will be the Contractor's responsibility to dispose of any discarded curb, edging, curb corners and curb inlets without additional compensation.

COMPENSATION

580.80: Method of Measurement

The quantity of curb and edging to be paid for will be the length actually removed and reset, and measured as specified in 501.80: Method of Measurement.

The quantity of curb or edging measured will be the length actually removed and stacked, and measured along the front arris line at the location stacked.

The quantity of curb or edging removed and discarded will be the length ordered to be removed and actually removed, but not included for payment under the items of Removed and Reset or Removed and Stacked.

Each curb inlet or curb corner removed and stacked or discarded will be considered as 1 unit.

Any remaining curb or edging removed which is not included for payment under the items listed above shall be classified as Earth Excavation (See 120.21: Earth Excavation).

580.81: Basis of Payment

Removing and resetting curb and edging will be paid for at the contract unit price per foot at the new location complete in place, which shall include sawcuts made in existing pavement, cement concrete placed to set the curb or edging and all other work necessary to complete the installation.

Removing and resetting curb inlets will be paid for at the contract unit price each for Curb Inlets Removed and Reset.

Removing and resetting curb corners will be paid for at the contract unit price each Curb Corners Removed and Reset.

Removing and stacking curb or edging will be paid for at the contract unit price per foot under the respective item.

Removing and stacking of curb inlets and curb corners will be paid for under the items for Curb Inlets Removed and Stacked, and Curb Corners Removed and Stacked, respectively.

Removing and discarding curb or edging will be paid for at the contract unit price per foot under the respective item.

Removing and discarding of curb inlets and curb corners will be paid for under the items for Curb Inlets Removed and Discarded, and Curb Corners Removed and Discarded, respectively.

580.82: Payment Items

580.	Curb Removed and Reset	Foot
581.	Curb Inlet Removed and Reset	Each
582.	Curb Corner Removed and Reset	Each
583.	Edging Removed and Reset	Foot
590.	Curb Removed and Stacked	Foot
591.	Curb Inlet Removed and Stacked	Each
592.	Curb Corner Removed and Stacked	Each
593.	Edging Removed and Stacked	Foot
594.	Curb Removed and Discarded	Foot
595.	Curb Inlet Removed and Discarded	Each
596.	Curb Corner Removed and Discarded	Each
597.	Edging Removed and Discarded	Foot

SECTION 600: HIGHWAY GUARD, FENCES AND WALLS

SUBSECTION 601: GUARDRAIL

DESCRIPTION

601.20: General

This work shall consist of the construction of guardrail and guardrail end treatments in accordance with these specifications and in close conformity with the lines and grades shown on the plans or established by the Engineer.

MATERIALS

601.40: General

Materials shall meet the requirements specified in the following Subsections of Division III, Materials:

Guardrail M8.07.0
Guardrail End Treatment M8.07.1
Guardrail Delineator M9.30.7
Guardrail Termini Delineator M9.30.10

The contractor shall provide a detailed list of all system components for maintenance purposes.

No work shall commence under these items until the Engineer has received all documentation.

CONSTRUCTION METHODS

601.60: Posts

Posts shall be set plumb, in hand or mechanically dug holes, or driven, then backfilled with acceptable material placed in layers and thoroughly compacted.

If driven, the posts shall be provided with suitable driving caps and equipment used which will prevent battering or injury of posts. Posts damaged or distorted as a result of driving shall be removed and replaced with approved posts.

Posts to be set in areas of proposed hot mix asphalt surfacing shall be erected prior to laying the surrounding finished surface.

Posts set in areas of hot mix asphalt or cement concrete surfacing shall conform to the special post design shown on the plans.

601.62: Guardrail Panel

The rail shall be erected in a smooth continuous rail conforming to the required line and grade. All rail elements and splices shall be per the plans. The rail shall make full contact at each splice.

All bolts, except where otherwise required at expansion joints shall be drawn tight. Bolts through expansion joints shall be drawn up as tightly as possible without being too tight to prevent the rail elements from sliding past one another longitudinally.

Curved guardrail shall be used when the radius is 150 ft or less.

Guardrail delineators shall be installed at intervals as indicated on the plans. Retroreflective sheeting shall conform to the following colors:

a. White on the upstream face in the right shoulder.
b. Yellow on the upstream face in the left shoulder.
c. Red on the downstream (wrong-way travel direction) face within 1,000 ft upstream of a median break of a divided highway or interchange.

601.63: Guardrail End Treatment

Proprietary end treatment systems shall be installed in accordance with the manufacturers' specifications and recommendations.

COMPENSATION

601.80: Method of Measurement

Guardrail and curved guardrail will be measured along the top edge of the rail element from the center of the first mid-span splice to the center of the last mid-span splice.

Transition to NCHRP 350 Guardrail will be measured as individual units 34 ft-4.5 in. in length, measured over two 12-ft-6-in. and one 9-ft-4.5-in. panels, as shown on the plans.

Transition to Rigid Barrier (Single Faced) will be measured as individual units 39 ft-10.75 in. in length, measured from the mid-span splice with the guardrail or end terminal to the end of the W beam terminal connector, as shown on the plans.

Transition to Rigid Barrier (Double Faced) will be measured as individual units 45 ft-7.75 in. in length, measured from the mid-span splice with the guardrail or end terminal to the end of the thrie beam terminal connector, as shown on the plans.

Transition to Bridge Rail will be measured as individual units 33 ft-9 in. in length, measured from the mid-span splice with the guardrail or end terminal to the end of the thrie beam terminal connector, as shown on the plans.

Transition to Thrie Beam, for connections between new guardrail and existing thrie beam guardrail, will be measured as individual units 6 ft-3 inches in length, measured from the W Beam post bolt slots to the thrie beam post bolt slots, as shown on the plans.

Trailing Anchorage will be measured as an individual unit 9 ft-4.5 in. in length, measured from the mid-span splice with the guardrail to the centerline of the short timber breakaway post, as shown on the plans.

Flared end treatments, tangent end treatments and guardrail end treatments will be measured as individual units, measured from the Begin Length of Need to the face of the impact head, as shown on the plans.

601.81: Basis of Payment

The construction of all guardrail items shall include the assembly and erection of all components, parts and materials complete at the intended locations.

Guardrail and curved guardrail will be paid for at the contract price per foot, complete in place, including posts, offset blocks, panels and connecting hardware.

Transition to NCHRP 350 Guardrail, Transition to Rigid Barrier (Single Faced), Transition to Rigid Barrier (Double Faced), Transition to Bridge Rail, and Transition to Thrie Beam Guardrail will be paid for at the contract unit price each, complete in place.

Trailing Anchorage will be paid for at the contract unit price each. Guardrail flared end treatments, tangent end treatments and guardrail terminal ends will be paid for at the contract unit price each, complete in place.

Guardrail delineators shall be considered incidental to the cost of the guardrail, guardrail end treatment or guardrail trailing anchorage.

The use of special post designs, where necessary or directed by the Engineer, shall be incidental to the work with no additional compensation.

Class B Rock Excavation, if necessary, will be paid under 140.81 Basis of Payment.

601.82: Payment Items

620.12	Guardrail, TL-2 (Single Faced)	Foot
620.13	Guardrail, TL-3 (Single Faced)	Foot
620.131	Guardrail, Deep Post (Single Faced)	Foot
620.32	Guardrail - Curved, TL-2 (Single Faced)	Foot
620.33	Guardrail - Curved, TL-3 (Single Faced)	Foot
621.12	Guardrail, TL-2 (Double Faced)	Foot
621.13	Guardrail, TL-3 (Double Faced)	Foot
621.32	Guardrail - Curved, TL-2 (Double Faced)	Foot
621.33	Guardrail - Curved, TL-3 (Double Faced)	Foot
627.1	Trailing Anchorage	Each
627.72	Guardrail End Treatment, TL-2 (Double Faced)	Each
627.73	Guardrail End Treatment, TL-3 (Double Faced)	Each
627.82	Guardrail Tangent End Treatment, TL-2	Each
627.83	Guardrail Tangent End Treatment, TL-3	Each
627.92	Guardrail Flared End Treatment, TL-2	Each
627.93	Guardrail Flared End Treatment, TL-3	Each
628.21	Transition to NCHRP 350 Guardrail	Each
628.22	Transition to Rigid Barrier (Single Faced)	Each
628.23	Transition to Rigid Barrier (Double Faced)	Each
628.24	Transition to Bridge Rail	Each
628.25	Transition to Thrie Beam	Each

SUBSECTION 628: IMPACT ATTENUATORS

DESCRIPTION

628.20: General

Work under this subsection shall consist of furnishing, installing, and in the case of temporary, the removal of impact attenuators in close conformance with the specifications of the manufacturer, and in close conformance with the locations, lines, and grades shown on the plans and/or designated in the Special Provisions.

MATERIALS

628.40: General

Materials shall meet the requirements specified in the following Subsections of Division III, Materials and as otherwise specified herein.

Gravel Borrow M1.03.0
Cement Concrete M4.02.00
Impact Attenuators M9.18.0
Redirective Impact Attenuators M9.18.1
Non-Redirective Impact Attenuators M9.18.2
Low-Maintenance Impact Attenuators M9.18.3
Retroreflective Sheeting M9.30.0

Impact attenuators shall be listed on the QTCE.

The Contractor shall supply an impact attenuator that meets or exceeds the Test Level (TL) designated in the description of the bid item.

The Contractor shall supply an impact attenuator for each location that can shield, at a minimum, the full width of the hazard but shall not exceed any maximum widths or lengths shown in the Plans or Special Provision.

Impact attenuators on bridge decks or spanning bridge joints shall require no anchorage to the bridge deck unless approved by the Engineer.

Transitions to rigid or semi-rigid barriers or connections to fixed objects such as bridge piers shall be supplied and installed by the Contractor and included in the unit price of the impact attenuator.

The approach end shall include a Type 3 Object Marker conforming to the requirements of the MUTCD. The sheeting material shall meet the requirements of M9.30.0: Retroreflective Sheeting.

The Contractor shall submit Shop Drawings for all materials a minimum of 60 days in advance of installation. Shop Drawings shall include a parts list, manufacturer's instructions for installation, drawings, transition details and drawings (if needed), and all service, maintenance, and/or owner's manuals. Any part of the system that varies from the exact make and model that was crash tested must be clearly identified in the Shop Drawings. The Contractor shall not proceed with installation prior to receipt of Shop Drawing approval.

628.41: Permanent

Impact attenuators classified as Permanent shall be installed by the Contractor and become property of the Department upon acceptance.

Permanent impact attenuators shall be supplied with all new, unused parts.

All materials and work associated with anchoring a Permanent Impact Attenuator, including the installation of a concrete slab if required by the manufacturer, shall be included in the bid price of the item.

628.42: Temporary

Impact attenuators classified as Temporary shall be installed by the Contractor and remain property of the Contractor during deployment and after removal. The Contractor shall be responsible for maintaining the attenuator in working condition throughout its deployment and repairing and/or replacing damaged components or systems per Subsection 7.17: Traffic Accommodation.

Temporary Impact Attenuators shall not require anchoring into a concrete foundation. Asphalt anchors, if required by the manufacturer, shall be supplied and installed by the Contractor and shall be included in the bid price of the item.

The condition of Temporary Impact Attenuators shall meet the quality standards set forth in the *Quality Standards for Work Zone Traffic Control Devices* published by ATSSA. Failure to meet these minimum standards will require the Contractor to clean or replace any retroreflective sheeting at no additional cost.

CONSTRUCTION METHODS

628.60: General

Excavation for attenuator foundations and anchorage, if required, shall be made to the required depth and to a width that will permit the installation and bracing of forms where necessary. All soft and unsuitable material shall be replaced with gravel borrow.

The impact attenuator and any anchorage or transitions, if necessary, shall be installed in accordance with the manufacturer's instructions. Any modification to the instructions or change in design due to field conditions must be approved by the Engineer.

628.61: Temporary Impact Attenuators

A Temporary Impact Attenuator shall be removed or removed and reset at the conclusion of the temporary traffic control plan setup and is no longer needed. The final removal shall be considered incidental to the cost of the item.

Removing and Resetting Temporary Impact Attenuators shall consist of removing and then reinstalling a Temporary Impact Attenuator to a new location shown on the plans or as directed by the Engineer.

Once a Temporary Impact Attenuator has been removed, the pavement surface shall be restored as needed. This work shall include filling any holes and the sweeping of any debris that may have

accumulated around it during deployment. This work shall be considered incidental to the cost of the item.

A damaged Temporary Impact Attenuator shall be repaired or replaced within 24 hours. The damaged location shall be protected by a Truck Mounted Attenuator, or as directed by the Engineer, until the impact attenuator has been restored to working conditions.

COMPENSATION

628.80: Method of Measurement

All impact attenuators will be measured as a single unit, each in place.

Temporary Impact Attenuator Removed and Reset will be measured as a single unit, each, to completely remove and reinstall the attenuator to a new location.

628.81: Basis of Payment

All impact attenuators will be paid for at the contract unit price for each location, which includes full compensation for all labor, equipment, materials, foundation and/or anchorage, and all incidental work necessary to complete the work as specified.

The final removal of a Temporary Impact Attenuator shall be considered incidental to the cost of the item.

Temporary Impact Attenuator Removed and Reset will be paid for at the contract unit price for the entire remove and reset operation and will include full compensation for all labor, equipment, materials, anchorage, restoration, and all incidental work necessary to complete the work as specified. Adjusting a Temporary Impact Attenuator that has moved due to passing traffic or weather events and/or the movement of a Temporary Impact Attenuator to accommodate the Contractor is not considered Removing and Resetting and will not be paid for.

Gravel Borrow required to replace unsuitable soils for any foundation and anchorage work will be paid for at the contract unit price under Item 151. Gravel Borrow.

A Truck Mounted Attenuator, if required to protect a damaged Temporary Impact Attenuator, will be paid for at the contract unit price under Item 853.403 Truck Mounted Attenuator.

628.82: Payment Items

628.302	Permanent Impact Attenuator, Non-Redirective, TL-2	Each
628.303	Permanent Impact Attenuator, Non-Redirective, TL-3	Each
628.304	Temporary Impact Attenuator, Non-Redirective, TL-2	Each
628.305	Temporary Impact Attenuator, Non-Redirective, TL-3	Each
628.312	Permanent Impact Attenuator, Redirective, TL-2	Each
628.313	Permanent Impact Attenuator, Redirective, TL-3	Each
628.214	Temporary Impact Attenuator, Redirective, TL-2	Each
628.215	Temporary Impact Attenuator, Redirective, TL-3	Each
628.322	Permanent Impact Attenuator, Low-Maintenance, TL-2	Each
628.323	Permanent Impact Attenuator, Low-Maintenance, TL-3	Each

SUBSECTION 629: CONCRETE BARRIER

DESCRIPTION

629.20: General

This item shall consist of furnishing and placing Portland cement concrete barrier on an accepted prepared subgrade or sub-base in accordance with these specifications and in reasonable close conformity with the lines, grades and dimensions shown on the plans.

MATERIALS

629.40: General

Materials shall meet the requirements specified in the following Subsections of Division III, Materials:

Cement Concrete M4.02.00
Steel Reinforcement M8.01.0
Epoxy Coated Reinforcing Bars M8.01.7
Preformed Joint Filler M9.14.0
Concrete Penetrant/Sealer M9.15.0
Demountable Reflectorized Delineators M9.30.7

629.60: General

Concrete barriers shall be either precast or cast-in-place and conform to M4.02.00: Cement Concrete.

The subgrade shall be properly shaped and compacted as specified in Subsection 170: Grading.

The barrier shall be cured according to the relevant requirements of 476.71: Curing and M4.02.14: Precast Units as herein amended. If the water method is utilized, the units shall be kept moist for a period of seven days.

Under no condition will the use of a curing compound be permitted.

629.61: Precast Barrier

The precast concrete barriers and transition pieces shall be in lengths of 10 ft and shall be subject to the approval of the Engineer for method of casting, handling and setting of the sections.

The reinforcing steel shall be in conformance with 901.62: Reinforcement and M8.01.7: Epoxy Coated Reinforcing Bars, as modified to conform to ASTM Designation A615, Grade 60.

The 1-in. plain dowel bars shall conform to ASTM A36 and shall be galvanized according to AASHTO M 111M/M 111.

The units shall be manufactured in a plant approved by the Engineer and subject to their inspection and control.

The forms shall be constructed of steel or other approved material and are to conform to the design shown on the plans; wood forms will not be allowed. Reuse of old, worn or misshapen forms will not be allowed.

The form release material is to be applied to the forms in an approved manner and of a type that will not reduce the adhesive and or penetrating qualities of the protective coating (Concrete Penetrant/Sealer) to the concrete.

The dowel bars shall be accurately set true to a plane at right angles to the plane of the end of the unit.

Lifting holes or devices shall be as indicated on Construction Standards so that no undue stresses are transmitted to the units.

The units shall be cast with the forms in a 180° inverted position and compacted with an approved vibrator. Air holes are to be filled immediately after form removal to the satisfaction of the Engineer.

629.62: Cast-in-Place Barrier

A. Conventionally Formed Barrier.

Forms shall be accurately set to the required line and grade, secured by a method not detrimental to the roadway pavement and maintained in a true position during concrete placement. Forms may be removed no sooner than 24 hours after placement of concrete.

B. Slipformed Barrier.

Concrete traffic barriers may be constructed by the use of slipform equipment provided that the finished barrier is true to the specified line and grade within a tolerance of ±¼ in. in 10 ft.

The barrier shall present a smooth, uniform appearance in its final position, and shall conform to the horizontal and vertical lines shown on the plans or as directed by the Engineer. Any unsatisfactory section of the barrier shall be removed and replaced at the Contractor's expense.

The concrete shall be vibrated and worked until adequately consolidated and free of honeycomb. The concrete shall be of such consistency after slipforming that it will maintain the shape of the barrier without sup-port. Prior to the beginning of operations, the Contractor shall insure that a continuous supply of concrete is available to the slipform machine to minimize starting and stopping. The slump of concrete shall not exceed 1.5 in.

The slipform machine shall be guided by vertical and horizontal sensors that ride along a wire line. A grade line gauge or pointer shall be attached to the machine in such a manner that a continual comparison can be made between the barrier being placed and the established grade line. The slipform machine shall not exceed the speed recommended by the manufacturer. In lieu of sensor controls, the slipform machine may be operated on rails or supports set at the required grade.

629.63: Concrete Median Barrier Cap

The work consists of constructing a 4-in.-thick cast-in-place cap between the single face median barriers as shown on the plans.

The cap shall be cast in place on a gravel foundation with the length of each section being 30 ft. A ½-in. premolded joint filler will be placed between these 30-ft sections. A ½-in. premolded joint filler will be placed around bridge pier columns and along the joints between the barrier and the cap where required.

629.64: Placement of Barriers

Precast concrete barrier units shall be placed on a previously compacted gravel foundation utilizing 24-in. by 8-in. by 24-in. concrete leveling blocks set flush with the top of the gravel to control setting of the unit to the proper grade.

The Contractor shall schedule their operation and sequence of installation of the barriers so that a minimum amount of closure pieces will be required.

Expansion and construction joints shall be as shown on the Construction Standards.

Any units showing cracks or other damages due to curing, transportation, installation or other acts of the Contractor shall be removed and replaced by the Contractor at no additional compensation.

629.65: Concrete Penetrant/Sealer

Concrete Penetrant/Sealer shall be applied to the exposed faces of the cement concrete barriers and concrete median barrier cap by the method described below and as directed by the Engineer.

The compound shall conform to the provisions of M9.15.0: Liquid Penetrant/Sealant and shall not be applied sooner than 28 days after the concrete has been poured and finished. The compound shall not be applied when the air temperature is below 50°F; the compound is not to be heated.

All of the surfaces that are to be treated shall be dry and cleaned of all dust, dirt, form oil, and debris by sweeping, sand blasting or air blasting.

All joints that are to be filled with a joint sealer are to be shielded from contact with the concrete penetrant/sealer with tape or other suitable protective measures approved by the Engineer.

The compound is to be applied in accordance with the manufacturer’s specifications.

629.66: Delineators

Delineators shall be installed in conformance with manufacturer's recommendations at beginnings and ends of each continuous run of barrier with intermediate placement at 80-ft intervals.

Two sided amber reflectors shall be mounted on top of double-faced median barriers.

Single faced barriers shall have side mounted installation with amber color delineating left edge, white color delineating right edge and red color backing on each.

Delineators shall be mounted at appropriate angles which provide maximum reflectorization.

COMPENSATION

629.80: Method of Measurement

Concrete Barrier - Single Faced will be measured by the foot along the face of the barrier at the gutter line.

Concrete Median Barrier - Double Faced will be measured by the foot along the center line of top of barrier.

Cast-in-place median barrier cap concrete will be measured by the cubic yard in place.

629.81: Basis of Payment

Concrete Barrier will be paid for at the contract unit price per foot which includes full compensation for all labor, equipment; materials including concrete penetrant/sealer, delineators, reinforcing steel, premolded filler, concrete leveling blocks and all incidental work necessary to complete the work as specified.

Cast-in-place Concrete Median Barrier Cap will be paid for at the contract unit bid price per cubic yard. This unit price shall include full compensation for all labor, tools, equipment, materials, including concrete penetrant/sealer, reinforcing steel and premolded joint filler and all incidental work necessary to complete the work as specified.

Gravel borrow for the foundation of the barriers and between the sections will be paid for under Item 151; Gravel Borrow.

629.82: Payment Items

629 .1	Precast Concrete Barrier - Single Faced	Foot
629.2	Precast Concrete Median Barrier - Double Faced	Foot
629.3	Cast-in-Place Concrete Barrier - Single Faced	Foot
629.4	Cast-in-Place Concrete Median Barrier - Double Faced	Foot
629.5	Cast-in-Place Median Barrier Cap	Cubic Yard

SUBSECTION 630: MAINTENANCE OF HIGHWAY GUARD

DESCRIPTION

630.20: General

This work consists of removing present highway guard, replacing individual components (posts, offset blocks and panels) and resetting in accordance with the drawings for new guardrail, these specifications and in close conformity with established lines and grades, or stacking them as directed.

MATERIALS

630.40: General

The materials removed shall be utilized in the highway guard as reset except, where necessary, new posts and new offset blocks shall be furnished by the Contractor. Any posts removed and found unsuitable for use in resetting shall be replaced with new posts and paid for under the item of guardrail post. Any materials damaged or lost during or subsequent to removal shall be replaced by the Contractor without compensation.

All new materials required shall be equal in all respects to the materials in the present highway guard.

CONSTRUCTION METHODS

630.60: Removal

The present highway guard shall be carefully removed together with all fittings, anchors and appurtenances and stacked and preserved safe from damage or loss. Old post holes shall be backfilled with suitable material and satisfactorily compacted.

630.61: Erection

Before resetting, the portion of the posts below the ground surface shall be cleaned. The highway guard shall be reset plumb on the new location lines and to the grades required. Backfilling around the highway guard posts shall consist of suitable material satisfactorily compacted. If the highway guard posts were originally set in concrete they shall be reset in their new locations in concrete.

630.63: Stacking

The Contractor shall accept and hold the responsibility for the removal, handling, stacking at a location convenient for removal by owner and protection of all anchors, posts, cables, fittings, etc. until final removal by others as designated and in accordance with the following:

Any anchors, posts, cables, fittings, etc., lost or damaged through lack of protection or carelessness by the Contractor shall be replaced with satisfactory material in kind at their expense.

Materials stacked shall be stored in neat piles that will be convenient for removal by the owner. The Engineer will determine the size and location of the piles of stacked material.

The Contractor's responsibility will cease upon final acceptance of the work, or 60 days from the time a certified notice (with copy to Engineer) is sent by Contractor to owner of material that all material is available for removal.

COMPENSATION

630.80: Method of Measurement

Highway Guard Removed and Reset will be measured in its final position. Highway Guard Removed and Stacked and Highway Guard Removed and Discarded will be measured in its original position. Measurements shall be from center to center of end post to which the guard is attached, along the top edge of rail element.

Individual guard rail posts, offset blocks and panels will be measured by the unit each.

Individual posts removed and reset and individual posts removed and stacked, shall be measured by the unit each including all hardware.

630.81: Basis of Payment

Removing and resetting highway guard will be paid for at the contract unit price per foot of Highway Guard Removed and Reset, complete in its final position, including posts, offset blocks, panels and connecting hardware.

Individual posts, panels and offset blocks shall include all hardware and will be paid for at the contract unit price each.

Guard panels shall include all hardware and will be paid for at the contract unit price each.

Individual posts removed and reset shall include all hardware and which shall be paid for at the contract unit price each.

Realignment of existing posts shall be incidental to the work with no additional compensation.

Removing and resetting individual posts will be paid for at the contract unit price each for Individual Posts Removed and Reset, complete in place.

Removing and stacking of highway guard will be paid for at the contract unit price per foot of Highway Guard Removed and Stacked.

Removing and stacking individual posts will be paid for at the contract unit price each for Individual Posts Removed and Stacked.

Rock excavation, if necessary, will be paid for at the contract unit price per cubic foot under the item for Class B Rock Excavation.

630.82: Payment Items

630.	Highway Guard Removed and Reset	Foot
630.1	Highway Guard Removed and Stacked	Foot
630.2	Highway Guard Removed and Discarded	Foot
632.	Guardrail Post – Steel	Each
632.1	Guardrail Post – Wood	Each
632.11	Guardrail, Deep Post – Steel	Each
632.2	Individual Post Removed and Reset	Each
632.3	Individual Post Removed and Stacked	Each
632.4	Individual Post Removed and Discard	Each
633.	Guardrail Offset Block – W Beam	Each
633.1	Guardrail Offset Block – Thrie Beam	Each
634.	W Beam Guard Panel	Each
634.1	Thrie Beam Guard Panel	Each

SUBSECTION 644: CHAIN LINK FENCES AND GATES

DESCRIPTION

644.20: General

This work shall consist of the construction of chain link fence and gates in accordance with these specifications, and in close conformity with the lines and grades shown on the plan or established by the Engineer.

MATERIALS

644.40: General

Materials shall meet the requirements specified in the following Subsections of Division III, Materials:

Chain Link Fences and Gates.....M8.09.0
Bonded Vinyl Coated Chain Link Fences, Posts, Rails, Fabric, Gates and Accessories.....M8.09.1
4,000 psi, 1.5-inch, 565 Cement Concrete Bases.....M4.02.00
Paint, High Zinc Dust Content - Galvanizing Repair.....M7.04.11

CONSTRUCTION METHODS

644.60: General

The posts shall be set true to the line and grade of the proposed fence.

End, Corner and Intermediate Brace Posts shall be set in concrete bases as shown in the Construction Standards.

The posts in masonry walls shall be set in pipe sleeves or sockets.

All line posts, except those which are unstable due to soil condition as described hereinafter, shall have drive anchor assemblies as shown in the Construction Standards.

Line Posts, which in the opinion of the Engineer are unstable due to soil condition, (such as in swamps or seasonal wet areas) shall be placed in a concrete base as shown in the Construction Standards.

Where solid rock is encountered without an overburden of soil, line posts shall be set a minimum depth of 8 in., and end, corner, gate and intermediate posts a minimum of 12 in. in the solid rock. The hole shall have a minimum width or diameter of 1 in. greater than the largest dimension of the post section to be set. The posts shall be cut, before installation to lengths which will give the required length of post above ground, or if the Contractor so elects they may use an even length of post above ground, or if the Contractor so elects they may use an even length of post set at greater depth into the solid rock.

After the post is set and plumbed the hole shall be filled with grout consisting of one part Portland cement and one part clean, well graded sand. The grout shall be thoroughly worked into the hole so as to leave no voids. Where posts are set in the above manner, concrete footings will not be required.

Where solid rock is covered by an overburden of soil or loose rock, the posts shall be set to the full depth shown on the standard drawing unless the penetration into solid rock reaches the minimum depths specified above, in which case the depth of penetration may be terminated. Concrete footings shall be constructed from the solid rock to the top of the ground as designated. Grouting will be required on the portion of the posts in solid rock.

Intermediate Brace Posts as used in these specifications, shall be spaced at 500-ft maximum intervals.

Gate, end, corner, and intermediate brace posts shall be braced as shown on the standard drawing. Changes in line of 30° or more shall be considered as corners.

644.61: Foundation Bases

Forms for placing concrete bases will not be required. Chamfer or bevel edges will not be required.

Where chain link fences are used to enclose Engineers field office and material buildings, the posts shall be set in ground without concrete bases to facilitate ease in removal later.

644.62: Top Rail

Top rails shall pass through the ornamental tops of line posts, forming a continuous brace from end to end of each stretch of fence. Lengths of top rail shall be jointed by sleeve type couplings. Top rails shall be securely fastened to terminal posts by pressed steel fittings.

On curves with a radius of less than 500 ft the top rail shall be bent true to the curve.

644.63: Spring Tension Wire

One continuous length of spring tension wire shall be used between end, corner or intermediate brace posts. Sufficient tension shall be applied so that there is no visible sag. On completion of the spring tension wire installation the wire shall be attached to the fence fabric with hog rings and to each line post with tie wire.

644.64: Fence Fabric

Chain link fabric over 5-ft fence shall be placed on the face of the post away from the highway, and for fence 5 ft or less, erect fabric on the face of the posts designated by the Engineer, except that on curves the fabric on all types of fence shall be placed on the face of the post which is on the outside of the curve.

The chain link fabric shall be placed approximately 2 in. above the ground and on a straight grade between posts.

The fabric shall be stretched taut and securely fastened to the posts. Stretching by motor vehicle will not be permitted. Fastening to end, gate, corner, and intermediate brace posts shall be with stretcher bars and fabric bands spaced at 1-ft intervals. The fabric shall be cut and each span attached independently at all intermediate brace and corner posts. Fastening to post, top rail, top tension cable or spring tension wire shall be with wire, metal bands, hog rings, or by other approved method.

Rolls of wire fabric shall be joined by weaving a single strand into the ends of the rolls to form a continuous mesh.

644.65: Gates

Chain link fabric shall be fastened to the end bars of the gate frame by stretcher bars and fabric bands, and to the top and bottom bars of the gate frames by tie wires in the same manner as specified for the chain link fence fabric; or by other standard methods if approved by the Engineer.

The height of the gate frame shall be approximately as follows:

Table 644.64-1: Required Gate Height

Fence Height	Gate Height
6 ft	5 ft-6 in.
5 ft	4 ft-6 in.
4 ft	3 ft-6 in.
3 ft	2 ft-6 in.

COMPENSATION

644.80: Method of Measurement

Chain link fence will be measured, approximately parallel to the ground by the foot of completed fence, exclusive of openings from outside of to outside of end posts.

Gates with gate posts will be measured between centers of the gate posts.

644.81: Basis of Payment

Chain Link Fence will be paid for at the contract unit price per foot, complete in place, except for rock excavation, which shall include all drive anchors, line posts, fabric, top rail, cable or wire, fasteners, clips and all material and equipment necessary to complete the work in a satisfactory manner. Allowance for rock excavation will be as specified under Class B Rock Excavation.

Gates with Gate Posts will be paid for at the contract unit price per foot of the height specified and the respective widths shown on the plans complete in place. Allowance for rock excavation will be made as specified under Class B Rock Excavation.

End post including brace will be paid for at the contract unit price each under item for Chain Link Fence End Post, complete in place. Corner and intermediate brace post will be paid for at the contract unit price each for Chain Link Fence Comer and Intermediate Brace Post, complete in place. The chain link fence fabric and posts shall be of the type used throughout the installation.

Concrete bases for line posts, if required, shall be paid for under Item 901.3, 4,000 psi, 1.5-in., 565 Cement Concrete for Post Foundation, which shall include the excavation, except rock excavation, which shall be paid under Class B Rock Excavation.

644.82: Payment Items

*644.	___ Inch Chain Link Fence (Spring Tension Wire) (Line Post Option)	Foot
*644.1	___ Inch Chain Link Fence (Spring Tension Wire) Vinyl Coated (Line Post Option)	Foot
*645.	___ Inch Chain Link Fence (Pipe Top Rail) (Line Post Option)	Foot
*645.1	___ Inch Chain Link Fence (Pipe Top Rail) Vinyl Coated (Line Post Option)	Foot
*647.	___ Inch Chain Link Fence (Pipe Top Rail) with Barbed Wire (Line Post Option)	Foot
*649.	___ Inch Chain Link Fence (Spring Tension Wire) with Barbed Wire (Line Post Option)	Foot
*650.	___ Inch Chain Link Gate with Gate Posts	Foot
*651.	___ Inch Chain Link Gate with Gate Posts and Barbed Wire	Foot
*652.	___ Inch Chain Link Fence End Post	Each
*653.	___ Inch Chain Link Fence Corner or Intermediate Brace Post	Each
*654.	___ Inch Chain Link Fence Fabric	Foot

*Insert height of fence or gate at beginning of nomenclature description. The last digits of the item number will indicate this height when possible.

In the case of option items listed in the proposal, the Contractor shall inform the Engineer of their option prior to the installation of the material. Once the option is designated, all material for the work shall remain the same throughout the job.

SUBSECTION 660: METAL PIPE RAIL

DESCRIPTION

660.20: General

This work shall consist of the construction of metal pipe rail in accordance with these specifications and in close conformity with the lines and grades shown on the plan or established by the Engineer.

MATERIALS

660.40: General

Materials shall meet the requirements specified in the following Subsections of Division III, Materials:

Rails and Posts ..... M8.10.0, Part A
  Fittings ..... M8.10.0, Part B
  Lead Wood ..... M8.10.0, Part C
  Bitumen ..... M8.10.0, Part D
Paint (Primer Coat)
  Zinc Dust-Zinc Oxide M7.04.07
Paint (Finish Coat)
  Enamel M7.03.02

CONSTRUCTION METHODS

660.60: Fabrication and Erection

All posts shall be set vertical. In setting the posts precautions shall be taken to insure proper alignment and leveling to prevent springing or bending the railing in erecting.

All railings shall be straightened as required before setting up. All horizontal pipes shall be provided with approved expansion couplings at intervals of not more than 50 ft.

Welding shall conform to the requirements of 960.61: Design, Fabrication and Erection.

After erection and welding all welds shall be cleaned and coated with a spot coat of M7.04.07 (TT-P-641G, Type 11 Primer Coating: Zinc Dust-Zinc Oxide).

The fabricator shall be on the Department's approved fabricator's list.

660.61: Painting

After erection and welding the completed rail shall be painted with 1 coat of M7.04.07 and a color coat of M7.03.02, Color No. 10075. Painting shall conform to 960.63: Painting.

COMPENSATION

660.80: Method of Measurement

The pipe rail will be measured in place and the quantity to be paid for will be the length as constructed outside to outside of end posts or top rail whichever is the greater.

660.81: Basis of Payment

The pipe rail will be paid for at the contract unit price per foot under the item for Metal Pipe Rail, complete in place.

660.82: Payment Items

660. Metal Pipe Rail ..... Foot

SUBSECTION 665: FENCES AND GATES REMOVED AND RESET, AND REMOVED AND STACKED

DESCRIPTION

665.20: General

This work shall consist of removing present fences and gates and resetting or stacking them in accordance with these specifications and in close conformity with the lines and grades shown on the plans or established by the Engineer.

MATERIALS

665.40: General

The materials removed shall be utilized in the fence and gates for resetting except, where necessary, new posts and bases shall be furnished by the Contractor. Any materials missing, damaged or lost during or subsequent to removal shall be replaced by the Contractor without additional compensation.

All new materials required shall be equal in quality and design to the materials in the present fence or gates.

CONSTRUCTION METHODS

665.60: Removal

The present fences and gates together with all appurtenances shall be carefully removed and satisfactorily stored and protected until required for resetting. Old post holes shall be backfilled with suitable material properly compacted.

665.61: Erection

Fences shall be reset plumb on the new line and grade as required and shall conform to the original fence or as the Engineer directs. Backfilling around the posts shall consist of suitable material satisfactorily compacted. If the fence posts were originally set in concrete bases they shall be reset in their new locations in concrete bases, conforming to M4.02.00: Cement Concrete for 4,000 psi, 1.5-inch, 565 Cement Concrete.

If repainting of fences which have been painted originally is required, such work shall be done as directed.

Gates shall be reset where and as directed. Painting, if required, shall be done as directed.

665.62: Stacking

The fencing, posts, braces and gates shall be carefully removed from their present locations, transported md stacked neatly on wooden planks at the locations directed on the project, to be available and convenient for final removal from the project by the owner.

The Contractor will be held responsible for the fencing, posts, braces and gates, and any damage to same prior to final removal from the project, but the Contractor's responsibility will cease upon

final acceptance of the work, or 60 days from the time a certified notice (with copy to the Engineer) is sent by Contractor to owner of material that all material is available for removal.

COMPENSATION

665.80: Method of Measurement

Fence that is removed and reset will be measured in the final position from outside to outside of end posts.

Fence that is removed and stacked will be measured in its original position from outside to outside of end posts and the quantity to be paid for will be the length actually removed and stacked.

Fence not required to be reset or stacked will become the property of the Contractor and shall be removed from the project without additional compensation.

Gates with gate posts will be considered as a unit, each.

665.81: Basis of Payment

Fence that is removed and reset will be paid for at the contract unit price per foot, complete in the final position under the respective item.

Fence that is removed and stacked will be paid for at the contract unit price per foot.

Gates with gate posts removed and reset, or removed and stacked will be paid at the contract unit price each.

Allowance for rock, if not already paid for under previous rock excavation, shall be made in accordance with the provisions as stipulated under Class B Rock Excavation.

Concrete bases for line posts shall be paid for under Item 901.3, 4,000 psi, 1.5-inch, 565 Cement Concrete for Post Foundation, which shall include the excavation.

665.82: Payment Items

665.	Chain Link Fence Removed and Stacked	Foot
666.	Chain Link Fence Removed and Reset	Foot
667.	Chain Link Fence Gate with Gate Posts Removed and Stacked	Each
668.	Chain Link Fence Gate with Gate Posts Removed and Reset	Each
669.	Fence Removed and Stacked	Foot
670.	Fence Removed and Reset	Foot
671.	Fence Gate and Gate Posts Removed and Stacked	Each
672.	Fence Gate and Gate Posts Removed and Reset	Each

SUBSECTION 670: SEDIMENTATION FENCE

DESCRIPTION

670.20: General

This work shall consist of furnishing, installing, and removing sedimentation fence in accordance with these specifications and in close conformity with the lines and grades shown on the plans or established by the Engineer.

MATERIALS

670.40: General

Materials shall meet the requirements specified in Division 3, Materials, M9.50.0: Geotextile Fabrics, for Temporary Silt Fence.

Fence post may be wood or metal. Wooden posts shall be at least 1.25 in. square by 5 ft long. Metal posts shall be at least 1 in. in each dimension, 5 ft long, and approved by the Engineer.

For each specific use, only commercially available fabric which is certified in writing by the manufacturer for the purpose intended shall be used. Torn or punctured fabrics shall not be used. The fabric shall be at least 3 ft wide.

The contractor shall submit a 15 yd^2 sample and a minimum 1 yd of top seam and cord shall be furnished for testing each type of fabric to be used, along with technical data sheets, for review and approval by the Engineer.

The Engineer reserves the right to reject any fabric which is deemed unsatisfactory for a specific use. The brand name shall be labeled on the fabric or the fabric container.

The contractor may use Department approved filter fabric, otherwise samples of proposed filter fabric shall be furnished 60 days prior to installation of the fabric.

Fabrics which are susceptible to damage from sunlight or heat shall be identified by suitable warning information on the packaging material and shall not be used in any installations where exposure to light will exceed 30 days.

The filter fabric shall have a cord (belt or rope) woven into the top edge of the roll to be used for attaching the fabric to the fence posts and providing support for the fabric.

CONSTRUCTION METHODS

670.60: General

Installation.

Install fence posts no further than 8 ft apart along the line of the proposed fence. The top of the posts shall extend at least 2 ft above the normal water level. Posts shall be driven into the soil to a sufficient depth to form a stable support for the filter fabric.

Attach the fabric to the posts on the upstream side. Attachment of the fabric to the posts can be made with prefabricated pockets in the fabric, staples or other suitable arrangements approved by

the Engineer. The fabric shall extend 2 ft above the normal water level and at least 1 ft shall extend horizontally along the soil at the bottom. Excavate a 6-in. x 6-in. trench along the bottom upstream side of the fence, wrap the bottom of the fabric around the inside of the trench and then backfill the soil into the fabric pocket so as to anchor the fence fabric.

Soil shall then be placed over the horizontal bottom layer of fabric to a depth of 6 in..

Fabric may be spliced together along the vertical edge by overlapping the pieces by one post spacing or 6 ft whichever is greater and securing the layer together at intervals of 2 in.

Should the required height exceed the roll width, a second roll shall be used. The width shall be overlapped a minimum of 1 ft and the layers shall be secured together at not more than 2-ft intervals along the midpoint of the overlap.

Installation procedures may be varied to comply with manufacturer's recommended procedures with the approval of the Engineer. The contractor may submit alternate installation procedures for approval by the Engineer.

Maintenance.

The installed fence shall be inspected at least daily by the contractor and restored as necessary to its approved, newly installed condition. Accumulations of debris and/or silt shall be removed and properly disposed of as necessary at no additional cost. In no case shall accumulations of more than 4 in. above the original ground line be permitted to remain. If a breach or other failure of the fence occurs, the fence shall be immediately restored. Any delay in maintaining the fence shall be cause to immediately suspend the work as provided for in Subsection 8.09: Delay and Suspension of Work.

Removal.

Following the completion of the work and stabilization of adjacent soil, the fence shall be completely removed from the site and the area restored to its original condition.

COMPENSATION

670.80: Method of Measurement

Sedimentation Fence approved by the Engineer shall be measured in place by the length along the top of the fence. Overlaps shall be measured as a single layer of cloth.

670.81: Basis of Payment

The work will be paid for at the contract unit price per foot of Sedimentation Fence complete in place and shall include all materials, labor, and equipment required to furnish, install, maintain, and remove the fence as herein described.

670.82: Payment Items

697. Sedimentation Fence ..... Foot

SUBSECTION 685: STONE MASONRY WALL

DESCRIPTION

685.20: General

This work shall consist of the construction of stone masonry walls in accordance with these specifications, and in close conformity with the lines and grades shown on the plans or established by the Engineer.

MATERIALS

685.40: General

Materials shall meet the requirements specified in the following Subsections of Division III, Materials:

Stone for Stone Masonry Wall M9.04.4
Cement Concrete M4.02.00
Mortar M4.02.15

CONSTRUCTION METHODS

685.60: Cement Concrete

Concrete for the footing and coping shall be placed in accordance with the requirements of Subsection 901: Cement Concrete.

685.61: Shaping Stones

Selected stone, roughly shaped to provide suitable exposed faces, shall be used at all angles and ends of walls.

All shaping of stone shall be done before the stone is laid in the wall. If a stone is loosened after the mortar has set, it shall be removed, the mortar cleaned off and the stone relaid in fresh mortar.

685.62: Headers

Headers shall occupy at least one quarter of the face area of the wall and shall be evenly distributed. Headers in walls 2 ft or less in thickness shall extend entirely through the wall.

685.63: Laying Stone

The masonry shall be laid and the face pattern shall be of uniform appearance throughout. The stones shall decrease in size from bottom to top of wall.

The stones shall be laid on horizontal beds parallel to the natural bed of the stone. Vertical joints shall be broken by at least 6 in. and no vertical joint shall be located directly above or below a header.

Each stone to be set in mortar shall be cleaned and thoroughly wetted before being set. They shall be set on full beds of mortar, and mortar joints shall be full and the stone settled in place before the mortar has set.

The wall shall be compactly laid having all interior joints completely filled with suitable stones or spalls thoroughly bedded in mortar.

685.64: Tree Wells

Where directed, dry stone masonry walls shall be constructed around the trunks of trees in order to support the embankment in conformity with the standard design shown on the plans and as directed.

COMPENSATION

685.80: Method of Measurement

Stone masonry wall will be measured by the number of cubic yards in the completed structure, including the mortar (if required), concrete footing and the coping material complete in place and accepted. The quantity measured for payment shall not exceed that shown on the plans or as directed by the Engineer.

685.81: Basis of Payment

Stone masonry will be paid for at the contract unit price per cubic yard under the item for Stone Masonry Wall in Cement Mortar or Stone Masonry Wall, Dry.

Excavation will be paid for at the contract unit prices per cubic yard under the item for Class A Trench Excavation or Class B Rock Excavation.

685.82: Payment Items

685.	Stone Masonry Wall in Cement Mortar	Cubic Yard
685.1	Stone Masonry Wall, Dry	Cubic Yard

SUBSECTION 690: WALLS REMOVED AND REBUILT

DESCRIPTION

690.20: General

This work shall consist of the removing and rebuilding of present stone masonry and balance stone walls in accordance with these specifications, and in close conformity with the lines and grades shown on the plans or established by the Engineer.

MATERIALS

690.40: General

The stone shall consist of those in the present wall and its foundation and such new stones as may be required.

Mortar shall meet the requirement of M4.02.15: Cement Mortar.

CONSTRUCTION METHODS

690.60: Stone Masonry Walls

A. Laying Stone in Mortar

All the stones from the present walls to be rebuilt, shall be removed and used to rebuild the new walls in addition to furnishing such new stones as may be necessary to provide rebuilt walls of uniform appearance and cross-sectional dimensions throughout their length.

The stones shall be laid so as to break joints and in full mortar beds. All vertical spaces shall be flushed with cement mortar and shall be packed full with spalls. No spalls shall be allowed in the beds – except if the bed requires more than 1 in. of mortar. At least 25% of the stones in the face shall be headers evenly distributed throughout the walls. Weep holes shall be constructed as directed.

B. Laying Stone Dry

The stone shall be laid so as to break joints and all vertical spaces shall be packed full with spalls. No spalls shall be allowed in the beds and at least 25% of the stones in the face shall be headers evenly distributed throughout the wall.

690.61: Balance Stone Walls

A trench for rebuilding the balance stone walls shall be excavated to a minimum depth of 12 in. as directed and to a width sufficient to place the largest bottom stones of the present wall.

All the stones from the present walls to be rebuilt, shall be removed and used to rebuild the new wall in addition to furnishing such new stones as may be necessary to provide rebuilt walls of uniform appearances and cross-sectional dimensions throughout their length. The open spaces about the base of the wall shall be filled with the materials excavated from the trench and all surplus excavation shall be used as directed on the slopes of the new embankment.

COMPENSATION

690.80: Method of Measurement

Stone Masonry Walls, Removed and Rebuilt as specified herein will be measured by the cubic yard and the pay quantity shall be only that quantity actually laid and approved.

Balance Stone Walls Removed and Rebuilt will be measured in place and shall be the length of balance stone walls rebuilt.

690.81: Basis of Payment

Stone Masonry Walls, Removed and Rebuilt will be paid for at the contract unit price per cubic yard for the kind of wall removed and rebuilt, complete in place.

Balance Stone Walls, Removed and Rebuilt, will be paid for at the contract unit price per foot, complete in place.

Excavation at the new location will be paid for at the contract unit price per cubic yard under the item for Class A Trench Excavation or Class B Rock Excavation.

690.82: Payment Items

690.	Stone Masonry Wall Removed and Rebuilt in Cement Mortar	Cubic Yard
690.1	Stone Masonry Wall Removed and Rebuilt Dry	Cubic Yard
691.	Balance Stone Wall Removed and Rebuilt	Foot

SECTION 700: INCIDENTAL WORK

SUBSECTION 701: CEMENT CONCRETE SIDEWALKS, PEDESTRIAN CURB RAMPS AND DRIVEWAYS

DESCRIPTION

701.20: General

This work shall consist of the construction of cement concrete sidewalks, pedestrian curb ramps, and driveways in accordance with the specifications and within the tolerances established on the plans.

MATERIALS

701.30: General

Materials shall meet the requirements specified in the following Subsections of Division III, Materials:

Gravel Borrow, Type b.....M1.03.0
Cement Concrete (4,000 psi, ¾-inch, 610) M4.02.00
Preformed Expansion Joint Filler.....M9.14.0

CONSTRUCTION METHODS

701.40: Preparation of Underlying Surface

A. Excavation.

Excavation of the area shall be in accordance with the applicable portions of Subsection 120: Excavation.

B. Subgrade and Subbase.

The subgrade for the sidewalks and driveways shall be shaped parallel to the proposed surface of the sidewalks and driveways and thoroughly compacted. All depressions in the subgrade shall be filled with suitable material and again compacted until the surface is smooth and hard. Prior to the placement of the subbase, the Contractor shall inspect the prepared subgrade to ensure that it is in conformance with the required grade and cross-section. Subgrade shall be fine graded to meet the applicable requirements of Subsection 170: Grading.

After the subgrade has been prepared, a gravel subbase shall be placed upon it. After being compacted thoroughly, the subbase shall be at least 8 inches thick and parallel to the proposed surface of the sidewalk. Prior to the placement of the cement concrete, the Contractor shall inspect the prepared subbase material to ensure that it is in conformance with the required grade and cross-section. Subbase material that is not in accordance with the plans or specifications shall be reworked or replaced to meet the applicable requirements of Subsection 170: Grading before the start of cement concrete placement. When placing cement concrete, the compacted subbase shall not be frozen or have standing water.

701.41: Cement Concrete Sidewalks, Pedestrian Curb Ramps, and Driveways

A. Forms.

Side forms and transverse forms shall be smooth, free from warp, of sufficient strength to resist springing out of shape, of a depth to conform to the thickness of the proposed sidewalk or pedestrian curb ramp and of a type satisfactory to the Engineer.

All mortar or dirt shall be completely removed from forms that have been previously used. The forms shall be well staked and thoroughly graded and set to the established lines with their upper edge conforming to the grade of the finished sidewalk or pedestrian curb ramp which shall have sufficient pitch to the roadside edge to provide for surface drainage.

All pedestrian curb ramp joints and transition sections which define grade changes shall be formed staked and checked for dimension, grade and slope conformance prior to placing cement concrete.

All forms shall be oiled before placing concrete.

B. Placing and Finishing Cement Concrete.

The concrete shall be placed in alternate slabs 30 ft long except as otherwise ordered. The slabs shall be separated by transverse preformed expansion joint filler ½ in. thick.

Preformed expansion joint filler shall be placed adjacent to or around existing structures as directed.

Detectable warning panels conforming to the plans shall be securely incorporated into the work by means acceptable to the Engineer.

On the foundation as specified above, the concrete shall be placed in such quantity that after being thoroughly consolidated in place it shall be 4 in. deep. At driveways, the sidewalks shall be 6 in. deep. No finishing operation shall be performed while free water is present. Finishing operations shall be delayed until all bleed water and water sheen has left the surface and the concrete has started to stiffen. After water sheen has disappeared, edging operations, where required, shall be completed. After edging and joining operations, the surface shall be floated. Immediately following floating, the surface shall be steel-troweled. If necessary tooled joints and edges shall be rerun before and after troweling to maintain uniformity. After troweling, the surface shall be brushed by drawing a soft-bristled push broom with a long handle over the surface of the concrete to produce a nonslip surface.

In conveying the concrete from the place of mixing to the place of deposit, the operation shall be conducted in such a manner that no mortar will be lost, and the concrete shall be so handled that the concrete will be of uniform composition throughout, showing neither excess nor lack of mortar in any one place.

The surface of all concrete sidewalks shall be uniformly scored into block units of areas not more than 36 ft^2. The depth of the scoring shall be at least ½ in. deep and no more than ½ in. wide.

The application of neat cement to surfaces in order to hasten hardening is prohibited.

The finishing of concrete surface shall be done by experienced and competent cement finishers.

When completed the sidewalks shall be kept moist and protected from traffic and weather for at least 3 days in accordance with the applicable provisions of 476.71: Curing and 476.74: Protection of Pavement.

CONTRACTOR QUALITY CONTROL

701.60: General

The Contractor shall provide QC adequate to ensure that all materials and workmanship conform with the specification requirements. The Contractor shall perform QC activities as outlined further below.

701.61: Contractor Quality Control Plan

The Contractor shall provide and maintain a Quality Control Plan (QC Plan). The QC Plan should sufficiently document the QC processes of all Contractor parties (i.e. Prime Contractor, Subcontractors, Producers) performing work required under this specification.

701.62: Sidewalk, Pedestrian Curb Ramp, and Driveway Materials and Workmanship

The Contractor shall verify that they are using the correct materials as specified under 701.30: General. All material shall exhibit satisfactory workmanship including; subgrade and subbase preparation and concrete placement and finishing as specified under 701.41: Cement Concrete Sidewalks, Pedestrian Curb Ramps, and Driveways.

DEPARTMENT ACCEPTANCE

701.70: General

The Department shall verify that the Contractor is correctly performing the work and QC activities.

701.71: Sidewalk, Pedestrian Curb Ramp, and Driveway Materials and Workmanship

The Engineer will perform Acceptance inspection and testing to verify that the workmanship and materials conform with 701.61: Contractor Quality Control Plan.

COMPENSATION

701.80: Method of Measurement

Cement Concrete Sidewalks, Pedestrian Curb Ramps, and Driveways will be measured in square yards.

Excavation will be measured by the cubic yard as specified in 120.80: Method of Measurement.

Gravel Borrow will be measured by the cubic yard as specified in 150.80: Method of Measurement.

Fine grading and compacting will be measured by the square yard as specified in 170.80 Method of Measurement.

701.81: Basis of Payment

Cement Concrete Sidewalk, Cement Concrete Pedestrian Curb Ramp, and Cement Concrete Driveway will be paid for at the contract unit price per square yard complete in place and shall include detectable warning panels.

Gravel will be paid for at the contract unit price per cubic yard under Item 151. Gravel Borrow.

Fine grading and compacting will be paid for at the contract unit price per square yard under Item 170., Fine Grading and Compacting – Subgrade Areas.

Excavation will be paid for at the contract unit price per cubic yard under the excavation items.

701.82: Payment Items

701.	Cement Concrete Sidewalk	Square Yard
701.1	Cement Concrete Sidewalk at Driveways	Square Yard
701.2	Cement Concrete Pedestrian Curb Ramp	Square Yard

SUBSECTION 702: HOT MIX ASPHALT SIDEWALKS AND DRIVEWAYS

DESCRIPTION

702.20: General

This work shall consist of the construction of sidewalks and driveways. Sidewalks and driveways shall be constructed of HMA. Construction shall be in accordance with the specifications and within the tolerances established on the plans.

MATERIALS

702.30: General

Materials shall meet the requirements specified in the following Subsections of Division III, Materials:

Gravel Borrow, Type b	M1.03.0
Asphalt Release Agents	M3.01.6
HMA for Driveways, Sidewalks, Berm, and Curb	M3.07.0
Hot Mix Asphalt Production Facility	M3.12.0
Hot Mix Asphalt Materials Testing Laboratory and Equipment	M3.13.0

CONSTRUCTION METHODS

702.40: General

Prior to the start of any work activity addressed in 702.40: General through 702.42: Construction of Hot Mix Asphalt Sidewalks and Driveways below, a Construction Quality Meeting shall be held to review the Contractor's Quality Control system. The Contractor shall present and discuss with the Engineer in sufficient detail the specific QC information and activities required under this specification. The meeting is intended to ensure that the Contractor has an adequate QC system in

place and that the Contractor's personnel are fully knowledgeable of the roles and activities for which they are responsible to achieve the specified level of quality. Contractor personnel required to attend the Construction Quality Meeting include the Construction QC Manager and all Superintendents.

702.41: Preparation of Underlying Surface

Walks and driveways shall be placed only upon properly prepared surfaces that are clean from foreign materials. The underlying surface shall be prepared in accordance with the requirements below, prior to the placement of sidewalk and driveway mixtures.

A. Excavation.

Excavation of the area shall be in accordance with the applicable portions of Subsection 120: Excavation. Existing pavements shall be sawcut in accordance the 450.49: Hot Mix Asphalt Joints as shown on the plans.

B. Subgrade and Subbase.

The subgrade for the sidewalks and driveways shall be shaped parallel to the proposed surface of the sidewalks and driveways and thoroughly compacted. All depressions in the subgrade shall be filled with suitable material and again compacted until the surface is smooth and hard. Prior to the placement of the subbase, the Contractor shall inspect the prepared subgrade to ensure that it is in conformance with the required grade and cross-section. Subgrade shall be fine graded to meet the applicable requirements of Subsection 170: Grading.

After the subgrade has been prepared, a gravel subbase shall be placed upon it. After being compacted thoroughly, the subbase shall be at least 8 in. thick and parallel to the proposed surface of the sidewalk. Prior to the placement of the HMA mixtures, the Contractor shall inspect the prepared subbase material to ensure that it is in conformance with the required grade and cross-section. Subbase material that is not in accordance with the plans or specifications shall be reworked or replaced to meet the applicable requirements of Subsection 170: Grading before the start of HMA placement. When placing HMA, the compacted subbase shall not be frozen or have standing water.

702.42: Construction of Hot Mix Asphalt Sidewalks and Driveways

A. Forms.

Where walls, curbing, or other suitable permanent supports are not present or where an approved mechanical spreader is not used, satisfactory forms shall be installed to assist in securing proper alignment and adequate compaction of the base and surface courses.

B. Zero Tolerance for Use of Petroleum Products as Release Agents.

The production, loading, transport, and placement of HMA sidewalks and driveways shall follow the zero-tolerance policy for the use of petroleum products as a release or cleaning agent specified under 450.44: Zero Tolerance for Use of Petroleum Products as Release Agents.

C. Hot Mix Asphalt Production.

HMA production shall conform to the requirements of 702.30: General.

D. Hot Mix Asphalt Transportation and Delivery.

HMA transportation and delivery shall conform to the requirements of 450.46: Hot Mix Asphalt Transportation and Delivery.

E. Hot Mix Asphalt Placement.

HMA sidewalks and driveways shall be constructed to the following thicknesses. The HMA sidewalks shall be paved in two lifts to achieve a final pavement thickness of 3 in. after compaction. The HMA driveways shall be paved in two lifts to achieve a final pavement thickness of 4 in. after compaction. The pavement structure shall meet the following requirements:

(a) The mixtures type shall be in accordance with 702.30: General.
(b) For sidewalks, the compacted lift thickness for intermediate course shall be 1.75 in. and the surface course shall be 1.25 in.
(c) For driveways, the compacted lift thickness for intermediate course shall be 2.5 in. and the surface course shall be 1.5 in.
(d) The intermediate course shall be a driveway and sidewalk recipe mix or 12.5 mm Superpave Surface Course. In areas of high traffic, the driveway intermediate course shall be 12.5 mm Superpave Surface Course.
(e) The surface course shall be a driveway and sidewalk recipe mix or 9.5 mm Superpave Surface Course. In areas of high traffic, the driveway surface course shall be 12.5 mm Superpave Surface Course.
(f) The mixture type and placement method shall be determined by the Contractor and approved by the Engineer prior to commencing the work.

A pedestrian path of travel must be maintained across the driveway opening. The dimensions, cross slope, grades, and tolerances of the pedestrian path shall be in conformance with the standard construction drawings.

The surface of the sidewalk or driveway shall have a cross-slope to the roadside edge to provide for surface drainage. The cross-slope shall be 1.5% ± 0.5%.

HMA shall be placed in a manner which limits segregation and allows for adequate compaction. The mixture shall be spread with a mechanical paver. In areas not accessible to a paver, the mixture shall be deposited in wheelbarrows or on approved steel dump sheets outside the areas on which it is to be placed. It shall then be immediately distributed into place with shovels and raked into a uniformly loose layer to the full width required and of such depth that, when compacted, it shall conform to the grade and slope required.

F. Hot Mix Asphalt Compaction.

Equipment used for compaction of HMA sidewalks and driveways may include smooth drum steel wheeled rollers, vibratory rollers, or oscillation rollers as determined appropriate by the Contractor for the particular mixture type being placed. The type and size of rollers used shall meet the requirements below.

(1) Compaction of Sidewalks.

The HMA mixture shall be compacted with a self-propelled roller with a weight not less than 1.5 tons and not more than 5 tons. In places inaccessible to a power roller, compaction shall be

obtained by means of mechanical plate compactor or by hand tampers with a mass not less than 50 lb and having a tamping face not exceeding 100 in.^{2}.

(2) Compaction of Driveways

The surface shall be compacted with a self-propelled roller with a mass not less than 3 tons and not more than 5 tons.

CONTRACTOR QUALITY CONTROL

702.60: General

The Contractor shall provide a Quality Control System (QC System) adequate to ensure that all materials and workmanship conform with the specification requirements. The Contractor shall provide qualified QC personnel and QC laboratory facilities and perform Quality Control inspection, sampling, testing, corrective action (when necessary), and documentation as outlined further below.

702.61: Contractor Quality Control Plan

The Contractor shall provide and maintain a Quality Control Plan (QC Plan). The QC Plan should sufficiently document the QC processes of all Contractor parties (i.e. Prime Contractor, Subcontractors, Producers) performing work required under this specification. QC activities related to the sidewalk and driveway operations shall be addressed in the Contractor's QC Plan for HMA Pavement in accordance with 450.61: Contractor Quality Control Plan.

702.62: Quality Control Personnel Requirements

The Contractor's Quality Control organization shall, at a minimum, consist of the personnel outlined under 450.62: Quality Control Personnel Requirements.

702.63: Quality Control Laboratory Facility Requirements

All Contractor QC testing shall be performed in laboratories qualified through the NETTCP LQP or accredited through the AAP. The QC laboratory shall conform to 702.30: General.

702.64: Quality Control Inspection

The Contractor shall perform Quality Control inspection of all work items addressed under this specification. Inspection activities during production and placement may be performed by qualified Production personnel (e.g. Skilled Laborers, Foremen, and Superintendents) or the Contractor's QC personnel. The Contractor shall not rely on the results of Department's Acceptance inspection for QC purposes. The Engineer shall be provided the opportunity to monitor and witness all QC inspection.

QC inspection activities must address the following four primary components:

- Equipment
- Materials
- Environmental Conditions
- Workmanship

The minimum frequency of QC inspection activity shall be in accordance with the requirements below and as outlined in the approved QC Plan. The quality of each sidewalk and driveway will be inspected and evaluated on the basis of Lots and Sublots. A Lot is defined as an isolated quantity of work which is assumed to be produced by the same controlled process. A Lot shall constitute no greater than the entire sidewalk or driveway surface area on the project completed within the same construction season using the same paving process.

The surface of each sidewalk and driveway shall be divided into longitudinal Sublots of 500 ft. The Contractor shall perform a minimum of one random QC measurement within each Sublot. Additional selective QC measurements within each Sublot will be performed as deemed necessary by the QC personnel. All QC inspection results shall be recorded.

Table 702.64-1: Minimum QC Inspection at HMA Sidewalks and Driveways

Inspection Component	Inspection Attribute	Minimum Inspection Frequency	Point of Inspection	Inspection Method
Equipment	As specified in QC Plan	Per QC Plan	Per QC Plan	Per QC Plan
Materials	HMA Mixture (Correct Type)	Per QC Plan	From Haul Vehicle On Site	Visual Check & Delivery Ticket
	Temperature of HMA Mixture	4 per Day (See Note 1)	From Haul Vehicle at On Site	Check Measurement
Environmental Conditions	Underlying Surface (Soundness)	Per QC Plan	Underlying Surface	Visual Check
	Underlying Surface (Free of Standing Moisture)	Per QC Plan	Underlying Surface	Visual Check
	Temperature of Air & Underlying Surface	1 per Day (See Note 2)	On Site	Check Measurement
Workmanship	HMA Lift Thickness	Per QC Plan	HMA Lift	Check Measurement
	Physical Segregation	Per QC Plan	HMA Surface	Visual Check
	Cross-Slope & Profile	Per QC Plan	Compacted HMA	Check Measurement
	Surface Deviations (See Note 3)	Once per 50 ft	At Finished Surface	10-ft standard straightedge
	Joint Deviations (See Note 4)	Once per 50 ft	At Joints	10-ft standard straightedge

Note 1: The initial temperature measurement will be taken from the first haul vehicle.
Note 2: At a minimum, the temperature measurements of the air and underlying surface shall be obtained prior to starting the HMA placement.
Note 3: When measured with a 10-ft straightedge the deviation shall be less than ¼ in.
Note 4: When measured with a 10-ft straightedge the deviation shall be less than ⅛ in.

Surface Deviation

When inspected with a 10-ft straightedge placed parallel to the center line of the pavement, the variation from the edge of the 10-ft straightedge to the top of the sidewalk or driveway surface between any two contact points shall not exceed ¼ in. The Contractor shall correct any location not meeting this requirement. The corrective method(s) proposed by the Contractor shall be subject to the approval of the Engineer and shall be performed at the Contractor's expense.

702.65: Quality Control Sampling and Testing

The Contractor’s QC personnel will perform QC sampling and testing at both the production facility and at the site of field placement to ensure that the production and placement processes are providing work conforming to the contract requirements. The Engineer will not sample or test for

Quality Control or assist in controlling the Contractor's operations. The Contractor shall furnish approved containers for all material samples. The Engineer shall be provided the opportunity to monitor and witness all QC sampling and testing.

A. Random Sampling.

The Contractor's QC System shall utilize stratified random sampling of each Lot produced and placed to assure that all material within the Lot has an equal probability of being selected for testing. The Contractor's qualified QC personnel shall obtain random QC samples at the minimum frequencies specified in Table 702.65-1. In all cases, application of the specified QC sampling frequencies shall result in a minimum of one random sample per Sublot.

Random sample locations shall be determined using the random number tables and procedures contained in ASTM D3665 or an electronic random number generator, as presented by the NETTCP. The determination of all random sample locations shall be documented on NETTCP Standard Test Report Form D3665RNG. The Contractor will provide the Engineer with the random QC sampling locations selected and documented for each Sublot prior to production and placement of the relevant Sublots.

B. Selective Sampling.

The Contractor's QC System may also utilize selective sampling (i.e. non-random samples), as needed, to provide supplemental information to assist in maintaining all production and placement processes in control. The Contractor's qualified QC personnel shall obtain selective QC samples from any Sublot as determined necessary and in accordance with the guidelines established in the approved QC Plan. Selective QC samples shall not be used as a basis to dispute the Engineer's Acceptance test results.

C. QC Sample Identification System.

The Contractor shall establish a reliable system for the identification of all QC samples obtained. All HMA loose mixture samples and core samples shall be correctly labeled with the following minimum information:

(a) Contract No.
(b) Date of Sample.
(c) Bid Item Number
(d) Mixture Type
(e) Mixture ID Number
(f) Lot & Sublot No.
(g) Sample No.
(h) Sample Type (i.e. Random or Selective).
(i) Sample Location (e.g. Station & Offset).

The Contractor's system and procedures for identification of QC samples shall be outlined in the approved QC Plan.

D. Retention of Split Samples.

The Contractor's qualified QC personnel shall obtain all material samples (HMA loose mix samples) for QC testing. The Contractor will retain split samples from each HMA loose mix sample. If

requested, these split samples will be provided to the Engineer. All split samples shall be properly labeled and stored for a period of 30 days, or until tested. The retained split samples may be discarded prior to the required 30 days when agreed upon by the Contractor and the Engineer.

E. Quality Control Testing of Prepared Underlying Surface.

The Contractor's QC personnel will perform QC testing during preparation of the underlying surface. All QC testing shall be in accordance with the current AASHTO, ASTM, NETTCP, or Department procedures specified in Subsection 170: Grading. The Engineer shall be provided the opportunity to monitor and witness all QC testing.

F. Hot Mix Asphalt Testing.

The Contractor's QC personnel will perform Quality Control testing at the HMA production facility to ensure that the production processes are providing work conforming to the contract requirements. The Engineer shall be provided the opportunity to monitor and witness all QC testing of HMA. All QC testing of HMA Lots shall be in accordance with the current AASHTO, ASTM, NETTCP, or Department test methods specified in Table 702.65-1.

Table 702.65-1: Minimum Quality Control Sampling & Testing of HMA Sidewalks and Driveways Lots

Quality Characteristic	Test Method(s)	Sublot Size	Minimum Test Frequency	Point of Sampling	Sampling Method
PG Asphalt Binder Content	AASHTO T 308	1,200 tons	1 per Sublot (See Note 1)	From Haul Vehicle at Plant	Random AASHTO R 97 and R 47
Combined Aggregate Gradation (See Note 2)	AASHTO T 30	1,200 tons	1 per Sublot (See Note 1)	From Haul Vehicle at Plant	Random AASHTO R 97 and R 47
In-place HMA Mat Density (Density Gauge)	AASHTO T 343 or T 355	Each Driveway	1 per Sublot (See Note 1)	From Compacted HMA Course	Selective & Random AASHTO T 343 or T 355

Note 1: In the event that the total daily HMA production is less than one Sublot, a minimum of one random QC sample shall be obtained for the day's production.
Note 2: The combined aggregated gradation shall conform to the requirements of 450.65: Quality Control Sampling and Testing Requirements, Part F(4).

702.66: Quality Control Documentation and Data Evaluation

A. QC Inspection Documentation & Evaluation.

The Contractor shall document all QC inspection activities for each HMA Lot produced and placed. All inspection results shall be recorded within 24 hours of inspection on current NETTCP standard IRFs. The QC Manager shall evaluate inspection results in a timely manner to confirm that production and placement processes are in control. The Contractor shall submit hard copies of all IRFs to the Engineer at the completion of each Lot.

B. QC Sampling and Testing Documentation & Data Analysis.

The Contractor shall document all QC sampling and testing data for each HMA Lot produced and placed. All sampling and testing data shall be recorded within 24 hours of sampling and testing on current NETTCP standard TRFs. The QC Manager shall evaluate sampling and testing results in a timely manner, as further outlined below, to confirm that production and placement processes are in control. The Contractor shall submit hard copies of all TRFs to the Engineer at the completion of each Lot.

C. Evaluation of Individual Sublot QC Test Results.

The Contractor shall evaluate the individual QC test results for each HMA Lot produced and placed. Each random QC test result shall be evaluated against the applicable Quality Limits within 24 hours of testing. Each Sublot test value shall be within the applicable Engineering Limits specified in Table 702.76-1.

If the evaluation of the QC testing data indicates that an individual Sublot is not in conformance with the applicable Engineering Limits, the Contractor shall follow the requirements of 702.67: Corrective Action.

702.67: Corrective Action

As part of the Contractor's QC System, the Contractor shall implement corrective action for any part of a Lot that is determined by inspection or testing to not be in conformance with the quality requirements specified in this specification. If the results of QC inspection identify nonconforming material or workmanship within one or more Sublots, or if the evaluation of the QC testing data indicates that any Sublot is not in conformance with the applicable Quality Limits, the Contractor shall isolate the Sublot(s) and perform additional inspection or testing to further assess the quality of the Sublot. Selective inspection or testing should be used to determine the limits of non-conformance. If a Sublot test result is outside of the Engineering Limits, the QC Manager and the Engineer will further assess the Sublot quality to determine whether the material in the Sublot can remain in place in accordance with 702.76: Lot Acceptance Determination Based on Testing Data, Part (2).

Based on the results of additional inspection or testing, the Contractor shall prepare a plan of corrective action for the nonconforming Sublot(s). The corrective action plan shall be submitted to and approved by the Engineer prior to initiating corrective action. All corrective action shall be performed at the Contractor's expense.

702.68: Quality Control Records System

The Contractor's Quality Control Records System shall conform to applicable requirements of 450.68: Quality Control Records System.

DEPARTMENT ACCEPTANCE

702.70: General

The Engineer is responsible for performing all Acceptance activities and making the final Acceptance determination for each Lot produced and placed. The Engineer's Acceptance System will include monitoring the Contractor's QC activity and performing Acceptance inspection,

sampling, and testing in order to determine the Quality and corresponding payment for each Lot. These activities will be performed for each HMA Lot as outlined further below.

702.71: Acceptance System Approach

For all Lots, the Engineer's Acceptance determination will be based on the Engineer's Acceptance inspection information and Acceptance testing data. The Engineer will perform Acceptance sampling and testing on a minimum of 50% of the Sublots produced and placed.

702.72: Engineer Monitoring of Contractor Quality Control

The Engineer will monitor the Contractor's QC System to confirm that QC activities are being performed for each Lot in compliance with this specification and the approved QC Plan. The Engineer will not perform the QC responsibilities of the Contractor or provide constant direction to the Contractor on how to perform Quality Control. The Engineer's monitoring of QC activity will include the following:

- Periodic visual observation of QC inspection, sampling, and testing.
- Reviewing QC documentation and records.
- Providing feedback based on monitoring findings.

When deficiencies in the Contractor's QC System are identified and documented by the Engineer, the Contractor shall take immediate action to address the deficiencies and coordinate appropriate corrective actions with the Engineer. If the material in an HMA Lot where deficiencies in the Contractor's QC System were identified is removed and replaced, and the replacement HMA complies with the Specification requirements, no further action will be required. If the Contractor fails to acknowledge the deficiency and take appropriate action, the Contractor shall suspend production and placement of the corresponding Lot(s). Failure by the Contractor to comply with the Quality Control requirements in either this specification or the approved QC Plan may result in the withholding of payment.

702.73: Acceptance Inspection

The Engineer will perform Acceptance inspection of all work items addressed under Subsection 702: Hot Mix Asphalt Sidewalks and Driveways to ensure that all materials and completed work are in conformance with the contract requirements. Acceptance inspection is intended to visually assess the quality of each HMA Lot produced and placed and will address only the inspection components of Materials and Workmanship in support of the Department's final acceptance determination.

All Acceptance inspection activity by the Department will be performed independent of the Contractor's QC inspection. The Engineer will document the results and findings of Acceptance inspection.

Table 702.73-1: Department Acceptance Inspection at Sidewalks and Driveways

Inspection Component	Inspection Attribute	Minimum Inspection Frequency	Point of Inspection	Inspection Method
Materials	HMA Mixture (Correct Type)	1 per Day	On Site	Visual Check & Delivery Ticket
Workmanship	Physical Segregation	50% of Sublots	Compacted HMA	Visual Check
	Cross-Slope	50% of Sublots	Finished HMA Surface	Check Measurement
	Surface Deviation	50% of Sublots	Finished HMA Surface	10-ft standard straightedge

Surface Deviation.

The Engineer will inspect the pavement for Surface Deviations using a 10-ft standard straightedge in accordance with the procedures outlined in 702.64: Quality Control Inspection.

702.74: Acceptance Sampling & Testing

A. Random Sampling.

The Engineer will utilize stratified random sampling in accordance with 450.65: Quality Control Sampling and Testing Requirements, Part A. The Engineer will obtain all random Acceptance samples independent of the Contractor's QC samples at the frequencies outlined below. The Engineer will obtain Acceptance samples from a minimum of 50% of all Sublots for the applicable Quality Characteristics specified in Table 702.74-1.

B. Selective Sampling.

The Engineer will utilize selective sampling (i.e. non-random samples) in accordance with 450.65: Quality Control Sampling and Testing Requirements, Part B.

C. Acceptance Sample Identification System.

The Engineer will use a standard system for the identification of all Acceptance samples. All HMA samples will be labeled by the Engineer with the minimum information indicated under 702.65: Quality Control Sampling and Testing, Part C.

D. Retention of Split Samples.

The Engineer's personnel will obtain all material samples for Acceptance testing. The Engineer will retain Acceptance split samples from each HMA loose mix sample in accordance with 702.65: Quality Control Sampling and Testing, Part D.

E. Hot Mix Asphalt Testing.

The Engineer will perform Acceptance testing using random samples obtained in accordance with 702.74: Acceptance Sampling & Testing, Part A from the HMA production facility. The specific Quality Characteristics subject to the Engineer's Acceptance testing are identified in Table 702.74-1. All Acceptance testing of HMA Lots will be performed by the Engineer in accordance with the

AASHTO, ASTM, NETTCP, or Department test methods specified in Table 702.74-1. Testing performed on samples obtained from the HMA production facility shall be performed by a NETTCP certified HMA Plant Technician.

Table 702.74-1: Engineer's Acceptance Sampling and Testing of HMA Sidewalks and Driveways Lots

Quality Characteristic	Test Method(s)	Sublot Size	Minimum Test Frequency	Point of Sampling	Sampling Method
PG Asphalt Binder Content	AASHTO T 308	1,200 tons	50% of Sublots	From Haul Vehicle at HMA Plant	Random AASHTO R 97 and R 47
Combined Aggregate Gradation (See Note 1)	AASHTO T 30	1,200 tons	50% of Sublots	From Haul Vehicle at HMA Plant	Random AASHTO R 97 and R 47
In-place HMA Mat Density (Density Gauge)	AASHTO T 343 or T 355	Each Driveway	50% of Sublots	From Compacted HMA Course	Selective & Random AASHTO T 343 or T 355
Note 1: The combined aggregated gradation shall conform to the requirements of 450.65: Quality Control Sampling and Testing Requirements, Part F(4).					

702.75: Lot Acceptance Determination Based on Inspection Results

The Engineer's Acceptance inspection results will be used in the final Acceptance determination for all Lots. Prior to final Acceptance of each Lot produced and placed, the Engineer will periodically evaluate all Acceptance inspection information for the prepared underlying surface and the Lot. The materials and product workmanship for the completed work will be evaluated for conformance with the plans and the requirements specified in 702.40: General through 702.42: Construction of Hot Mix Asphalt Sidewalks and Driveways.

When the Acceptance information identifies deficiencies in either material quality or product workmanship for any underlying surface location or Sublot(s), the location or Sublot(s) will be isolated and further evaluated by the Engineer through additional Acceptance inspection (or sampling and testing, if relevant or possible). Depending upon the findings of the additional Acceptance inspection activity, the Engineer will determine the disposition of the nonconforming work in accordance with Subsection 5.03: Conformity with Plans and Specifications.

After each Lot (and corresponding prepared underlying surface) is complete, including any corrective action, the Engineer will evaluate all Acceptance inspection information for the Work. The Engineer will accept the subject Work if the Engineer's evaluation of all inspection information for the completed Lot (and underlying surface) indicates that the corresponding materials and product workmanship meet the specified requirements (provided the evaluation of all Acceptance testing data for the subject work per 702.76: Lot Acceptance Determination Based on Testing Data also finds the work to be acceptable).

702.76: Lot Acceptance Determination Based on Testing Data

Evaluation of Lot Testing Data.

Prior to final acceptance of each Lot produced and placed; the Engineer will periodically evaluate all available Acceptance testing data for the Lot.

(1) Conformance with Engineering Limits.

The Engineer will evaluate all Acceptance testing data and Contractor QC testing data for each Lot to determine conformance with the Engineering Limits in Table 702.76-1. Each Sublot test value for the Acceptance Quality Characteristics identified in Table 702.76-1 shall be within the Engineering Limits.

If a Sublot test result is outside of the Engineering Limits, the QC Manager and Engineer will further assess the Sublot quality to determine whether the material in the Sublot can remain in place. The Engineer will determine the disposition of the Sublot in accordance with Subsection 5.03: Conformity with Plans and Specifications.

If the Engineer's assessment determines that the material quality is not sufficient to permit the Sublot to remain in place the Sublot shall be removed and replaced. When a nonconforming Sublot is corrected or replaced, the Engineer will perform Acceptance testing of the Sublot and evaluate the test results for conformance with the Engineering Limits. Once the above requirements have been met, the Engineer will accept all completed Sublots.

(2) Final Lot Acceptance Determination.

For each Lot produced and placed, the Engineer will evaluate all Acceptance testing data for the Lot after all Sublots are complete in-place.

After each Lot is complete, including any corrective action, the Engineer will perform a final evaluation of all Acceptance data and Contractor QC data for the Lot. The Engineer will accept the Lot if the Engineer's evaluation of all testing data for the Lot is in conformance with this specification and the contract documents.

Table 702.76-1: Quality Limits for Acceptance of HMA Lots

Quality Characteristic	Target	Lower Engineering Limit	Upper Engineering Limit
PG Asphalt Binder Grading	Per Binder Grade Specified	Per Binder Grade Specified	Per Binder Grade Specified
PG Asphalt Binder Content	Per JMF	Target - 0.4%	Target + 0.4%
In-Place HMA Mat Density (Density Gauge)	95 % of G_{mm}	91.5 % of G_{mm}	98.5 % of G_{mm}

COMPENSATION

702.80: Method of Measurement

Hot Mix Asphalt Sidewalk or Driveway will be measured by the ton.

Gravel Borrow will be measured by the cubic yard as specified in 150.80: Method of Measurement.

Fine grading and compacting will be measured by the square yard as specified in 170.80 Method of Measurement.

702.81: Basis of Payment

Hot Mix Asphalt Sidewalk or Driveway will be paid for at the contract unit price per ton complete in place.

Gravel will be paid for at the contract unit price per cubic yard under Item 151., Gravel Borrow.

Fine grading and compacting will be paid for at the contract unit price per square yard under Item 170., Fine Grading and Compacting – Subgrade Areas.

Excavation will be paid for at the contract unit price per cubic yard under the excavation items.

All required sawcutting in the existing pavement in accordance with this specification will be included in the contract unit price for Hot Mix Asphalt Sidewalks and Driveways.

701.82: Payment Items

702. Hot Mix Asphalt Sidewalk or Driveway.....Ton

SUBSECTION 710: BOUNDS

DESCRIPTION

710.20: General

Bounds shall be of granite as directed and shall be set at points designated by the Engineer and in conformity with these specifications. Drill Steel rods may be used, if directed, where the points fall on exposed rock.

Where and as directed, the stone or concrete bounds now in the ground shall be removed and reset in conformity with these specifications. In instances where these are not to be reset they shall be transported and stacked as directed.

Bounds (Lettered-Granite) and Bounds (Plain Granite) Furnished and Set, shall consist of furnishing and installing highway property bounds as required and in accordance with the plans and the applicable provisions of this Section. Lettering shall be in accordance with the Department Standards and face abutting properties.

MATERIALS

710.40: General

Material shall meet the requirements specified in the following Subsections of Division III, Materials:

Granite Bounds M9.04.8
Drill Steel Rods M8.02.0

CONSTRUCTION METHODS

710.60: General

The bounds shall be set at the depth and position as directed, and they shall not project above the ground more than 6 in. after final grading.

Bounds located in lawns shall be set with the top of the bound 2 in. below the surface.

Bounds located in sidewalks or drives shall be set with the top of the bound flush with the surface.

Material for backfilling shall consist of suitable excavated material carefully placed about the bound and thoroughly tamped. When the excavation is in earth not suitable for backfilling, the Contractor shall furnish clean gravel or sand for backfill.

When the bound location falls on solid ledge and the use of a drill steel rod is directed by the Engineer, a 1.5-in. hole shall be drilled to a depth of 18 in. and a drill steel rod as specified under 710.40: General shall be placed in the hole. The rod shall be set so that the hole is on the bound point. The drill steel rod shall project above the ledge from 1 to 2 in. and shall be grouted with a 1:1 mortar mix.

The ½-in. drill holes in the top of the bounds shall be filled to their full depth with lead rope securely compacted in place.

710.61: Bounds Removed and Reset

Present bounds shall be excavated from the ground, the holes properly backfilled with suitable excavated material, or borrow, and the bounds delivered to the new locations and reset as directed and suitably backfilled, all in accordance with the requirements for setting bounds as stipulated hereinbefore.

When a bound to be reset does not have a drill hole in the top center of the bound, a hole 1.5 in. in depth and ½ in. in diameter with the bottom somewhat flared, shall be drilled and this hole filled with lead rope securely compacted in place.

The Contractor will be held responsible for all bounds removed and shall replace at their own expense all bounds as may have been broken by their employees, or otherwise, after such removal.

710.62: Bounds Removed and Stacked

Present bounds shall be excavated from the ground, the holes properly backfilled with suitable excavated material and the bounds carefully stacked, as directed.

The Contractor shall accept and hold entire responsibility for the removal, handling, stacking at a location convenient for removal by owner, and protection of all bounds until the final removal by others as designated and in accordance with the following: Any bound damaged through lack of protection or carelessness by the Contractor shall be replaced with a satisfactory bound at their expense. The Contractor's responsibility will cease upon final acceptance of the work or 60 days from the time a certified notice, with copy to Engineer, is sent by Contractor to owner of material that material is available for removal.

COMPENSATION

710.81: Basis of Payment

This work will be paid for at the contract unit price each under the item for Bounds Removed and Reset, or Bounds Removed and Stacked, or Bounds (Lettered-Granite) or Bounds (Plain-Granite) or Drill Steel Rods (Set in Solid Ledge) complete in place and paid for as a bound of the type indicated.

Allowance for rock, if not already paid for under previous rock excavation, shall be based on area 24 in.^{2} multiplied by the depth of the rock to the bottom of the bound plus 6 in., and will be paid for under Item 144. Class B Rock Excavation. There will be no rock allowance paid for drill steel rods.

Bounds which are designated to be Removed and Reset and are found to be unsuitable for reuse after excavation through no fault of the Contractor shall be paid for at one half the contract unit price.

Bounds which are designated to be Removed and Stacked and are found to be unsuitable for reuse through no fault of the Contractor will be paid for at the full contract unit price.

Borrow materials, when directed to be used, will be paid for at the contract unit price per cubic yard for the particular type of Borrow.

710.82: Payment Items

710.3	Bound-Lettered Granite	Each
710.4	Bound-Plain Granite	Each
711.	Bound Removed and Reset	Each
712.	Bound Removed and Stacked	Each
144.	Class B Rock Excavation	Cubic Yard

SUBSECTION 715: RURAL MAIL BOXES REMOVED AND RESET

DESCRIPTION

715.20: General

This work consists of the removing and resetting present mail boxes in accordance with these specifications and in close conformity with the lines and grades established by the Engineer.

MATERIALS

715.40: General

Material shall meet the requirements specified on the plans.

CONSTRUCTION METHODS

715.60: General

The mail boxes indicated shall be removed together with the posts, and the post holes filled with suitable material and properly tamped.

If necessary during the construction the mail boxes shall be set in temporary locations as directed, so that they are easily accessible to the mail carrier.

In their final permanent location the present mail boxes shall be set on new wooden bases and iron pipe posts as shown on the Department's plan for Setting Rural Mail Boxes.

COMPENSATION

715: Method of Measurement

The number of units to be paid for will be determined by the number of sustaining posts installed and not by the number of mail boxes removed and reset.

715.81: Basis of Payment

Payment for this work will be made at the contract unit price each under the item for Rural Mail Box Removed and Reset which price shall constitute full compensation for setting the boxes in temporary locations.

Rock excavation, if necessary, will be paid for at the contract unit price per cubic yard under the Item 144. Class B Rock Excavation.

715.82: Payment Items

715. Rural Mail Box Removed and Reset .....Each

SUBSECTION 717: METAL BIN-TYPE RETAINING WALL

DESCRIPTION

717.20: General

This item consists of the furnishing and erection of metal retaining wall members consisting of stringer and spacer units, columns, column caps, stiffeners and other accessories meeting the requirements of these specifications. The details of the wall members and other arrangements in the finished wall shall be as shown on the plans.

717.21: Erected Wall

When erected the walls shall consist of a number of columns in pairs, one column of each pair being in the plane of the front of the wall and the other column being in the plane of the rear of the wall, with the pairs of columns spaced longitudinally with overlapping S-shaped facing and rear members (stringers) and transversely with overlapping U-shaped tie members (spacers). The necessary bolts and appurtenances shall be furnished for complete assembly of the units into a continuous closed face wall of connected bins.

MATERIALS

717.40: General

Material shall meet the requirements specified in M8.13.2: Metal Bin-Type Retaining Wall of Division III, Materials.

CONSTRUCTION METHODS

717.60: Manufacturer's Responsibility

All units shall be so fabricated that units of the same nominal size shall be fully interchangeable. No drilling, punching or drifting to correct defects in manufacture shall be permitted. Any units having holes improperly punched shall be promptly replaced at the expense of the Contractor.

Whenever possible in the manufacture of the units a minimum forming radius of 1-in. shall be maintained. All units that are formed with less than 1-in. radius shall be hot-dipped galvanized after forming.

717.61: Excavation

Rough excavation for the site of the wall shall be made to the lines and grades shown on the plans or as directed. The bearing at the corners of the bin shall be firm and true to grade before any wall is erected.

No base plate shall be set on ledge or concrete and, if encountered, the ledge or concrete shall be removed and replaced with a gravel cushion having a minimum thickness of 12 in. between the base plate and the ledge or concrete.

Gravel shall conform to the requirements of M1.03.0: Gravel Borrow Type c for Gravel Borrow.

717.62: Erection of Units

Prior to erection, the gauge of stringers, spacers and columns shall be readily identifiable.

The units shall be erected as shown on the plans. Members shall be handled carefully and any which are damaged as a result of handling, storing or erecting shall be removed and new members substituted at the Contractor's expense. Any and all plain galvanized accessories, excluding bolts, shall be covered prior to erection with an approved paint supplied by the manufacturer.

The units in the wall shall conform to the dimensions and gauges specified on the plans and when assembled, shall be in conformity with the lines, grades and dimensions shown on the plans.

717.63: Construction of Wall on Curve

In the construction of a wall on a curve the proper curvature for the face shall be obtained by the use of shorter stringers in the front or rear panels of retaining wall as designated on the plans or by the Engineer.

717.64: Height of Wall

The wall height may be varied but it shall not exceed the maximum height shown for the design selected. Two or more designs of retaining walls may be incorporated in the same wall by the use of special split columns to make the connection on the stepback.

717.65: Backfill

The filling of the interior of the wall and behind the wall may progress simultaneously with the erection of the units and shall consist of gravel conforming to the requirements of M1.03.0: Gravel Borrow, Type a. The backfilling shall be made in layers not greater than 6 in. in thickness and shall be thoroughly and satisfactorily compacted. The puddling method of backfilling will not be permitted.

COMPENSATION

717.80: Method of Measurement

The quantity of metal bin-type retaining wall to be paid for under this item shall be the number of square feet of area of the total of all front panels of metal retaining wall complete in place in the accepted work. The area of each front panel shall be determined by multiplying the width of each front panel by its total height.

Excavation shall be measured as specified in Subsection 120: Excavation for Earth Excavation or Class A Rock Excavation, and as indicated on the plan.

Gravel borrow shall be measured as specified in 150.80: Method of Measurement.

717.81: Basis of Payment

The above work will be paid for at the contract unit price per square foot of Metal Bin-Type Retaining Walls, complete in place.

Excavation will be paid for at the contract unit price per cubic yard under the item of Earth Excavation or Class A Rock Excavation.

Gravel for filling in and around the metal bin-type retaining wall will be paid for at the contract unit price per cubic yard for Item 151. Gravel Borrow.

717.82: Payment Items

717. Metal Bin-Type Retaining Wall .....Square Foot

SUBSECTION 740: ENGINEER'S FIELD OFFICE AND MATERIALS LABORATORY (EACH WITH PERTINENT EQUIPMENT)

DESCRIPTION

740.20: General

Satisfactory office space, trailers, materials laboratory, or the utilization of a suitable existing building or buildings as directed shall be provided when required, in an approved location on the project or in the immediate vicinity thereof, for the exclusive use of the Engineers and Inspectors of the Department; such facilities to be separate from any building or buildings used by the Contractor.

740.21: Requirements

The trailers or buildings shall be fully equipped and made ready for use prior to the beginning of other work on the project and may remain for a period of approximately 45 days after all work on the project has been completed and accepted by the Department.

All offices and laboratories shall be maintained in good condition and appearance by the Contractor for the designated period, after which all portable buildings or trailers, fencing, surfacing and utilities shall be removed from the location, the areas cleaned, loamed and seeded if required, and left in a neat and acceptable condition.

If existing buildings are utilized, the above-mentioned requirements shall apply.

740.22: Building Types and Construction

The building or facilities may consist of any of the following, subject to approval of the Engineer.

a. Moved onto or constructed on the site.
b. A trailer or trailers, each type as stipulated in the Proposal.
c. An existing building, owned or rented by the Contractor, containing floor space equivalent to the type specified.

Buildings or trailers moved onto or constructed on the project shall conform with the following:

A. General.

The work to be done under this section shall consist of furnishing all labor, equipment and materials to construct, furnish and maintain buildings or trailers for the Engineer's use, in accordance with the Department Standards and these Specifications.

The sanitary facilities are not for general use by the Contractor's employees. Sanitary provisions for these employees shall be provided otherwise by the Contractor in accordance with Subsection 7.02: Pollution Prevention, Paragraph F.

The work on buildings and trailers shall be completed before any other construction work is done at the site. Maintenance shall continue until the work at the site under the Contract is completed and the buildings or trailers shall be kept clean, orderly, and in working condition at all times.

The Contractor shall protect the buildings or trailers against theft throughout the 24 hours of the day and night and be responsible for any loss of property of the Department and the personal property of employees of the Department housed therein, due to either fire, theft or other causes.

B. Plumbing.

Each office shall be equipped with complete sanitary and washroom facilities. All connections shall conform with state and local requirements for venting and other sanitary provisions.

A ¾-in. copper tubing type L shall be installed for the water service. The water closets shall be provided with sufficient pressure to completely expel the contents in one operation.

Insulation shall be provided on all services where necessary. If directed, the Contractor shall furnish and install an approved electric tape, as directed, together with necessary switches and thermostat for each water pipe to prevent freezing.

If a sanitary sewer is not available, a septic system adequate for the office meeting the requirements of the Department of Environmental Protection regulations set forth in "The State Environmental Code Minimum Requirements for the Subsurface Disposal of Sanitary Sewage - Title 5" shall be installed.

The Department will not approve the location of a Field Office until the Contractor has obtained approval for their proposed method of sanitary sewage disposal from a) The Department of Environmental Protection if the location is on state property or b) Department of Environmental Protection and the applicable local Board of Health if the location is on private or municipal property.

The Contractor will be required to furnish personnel, equipment and materials for soil test pits and percolation tests and to furnish plans, prepared by a Registered Professional Engineer skilled in the matter of subsurface sewage disposal, signed and stamped with the Engineer's stamp, for any proposed subsurface sewage disposal system. The plan or plans will meet the requirements of Title 5 of the State Environmental Code or its successor or amendments thereto.

The Contractor will be required to determine, through the appropriate regional office of the Department of Environmental Protection, whether or not a proposed site is within a watershed area for public water supply.

Every effort will be made not to locate temporary Sanitary Facilities on any public water supply watershed. Should there be no alternative, the provisions of any regulations of D.E.P. Division of Water Supply and the above shall apply.

In the event that it can be shown that there is no place reasonably proximate to the job with suitable soil and site conditions that will permit subsurface sewage disposal, the Department of Environmental Protection will consider approval of a tight tank system. The Contractor will have their engineer submit their tight tank proposal and plans to the appropriate Regional Environmental Engineer of the Department of Environmental Protection in compliance with their "Sanitary Sewage Tight Tank Policy" for approval.

C. Wiring and Lighting.

48-in. non-glare fluorescent luminaires shall be installed in each office so as to provide a minimum level of illumination at desk height of 100 foot-candles. Two fixtures shall be placed over the drawing table as directed. The master switch shall be near the door and control the desk light. Separate pull chains shall be provided for the lights over the table. Four double convenience outlets shall be installed where directed.

Electric wiring in each building or trailer shall be complete with meter connections, fuse box and switch.

D. Heating and Air Conditioning.

All buildings or trailers shall be heated and air conditioned with equipment capable of maintaining a temperature of 70°F, the total cost to be borne by the Contractor.

E. Area Enclosures, Surfacing and Maintenance.

The area occupied by the buildings or trailers shall be enclosed with 72-in. chain link fence, including a 12-ft clear opening double-swing gate, all with 3 strands of barbed wire on extension arms and conforming to the relevant provisions of Subsection 644: Chain Link Fences and Gates. The area to be enclosed will depend on the manner in which the buildings are arranged and shall be satisfactory to the Engineer.

A portion of the area within the enclosure designated by the Engineer for use as walks and parking, shall be graded and paved with 2.5-in. hot mix asphalt over a 6-in. gravel foundation.

The Contractor shall maintain the enclosed area by cleaning as required, including the removal of snow from the paved portions.

Toilet tissue, paper towels and soap shall be furnished by the Contractor as required. The office shall be cleaned and floors washed and waxed weekly. The space between the ground and trailer floor shall be completely closed in and insulated.

All of this work shall be included for payment under the contract price for furnishing the specified number and types of buildings.

F. Insurance and Replacement.

At the time the buildings are made available to the Department, the Contractor shall furnish evidence to the Engineer that Insurance in form, coverage and substance satisfactory to the Department in amount of $5,000 (non-deductible) has been obtained which will protect the Commonwealth's property and/or employee's personal work related or professional equipment against loss of property in any of the buildings or trailers from fire, theft, storm or flood.

The insurance shall be kept in effect during the entire period of occupancy, with evidence of all necessary renewals being promptly forwarded to the Engineer.

In case of fire, theft or breakdown, all equipment involved shall be repaired or replaced by the Contractor within 48 hours.

In the event buildings or trailers, being used as field offices or materials laboratory, are destroyed or rendered untenable for any reason, they shall be replaced within two weeks, or as directed.

Title to the buildings and equipment shall remain in the name of the Contractor.

MATERIALS (EQUIPMENT)

740.40: General

Buildings or trailers shall have equipment as hereinafter specified, which shall be new or in condition satisfactory to the Engineer. The repair or replacement of faulty equipment shall be prompt and at the expense of the Contractor. All equipment will remain the property of the contractor. A suitable non-freezing type fire extinguisher shall be furnished for each field office and materials laboratory.

740.41: Engineers Field Office (Type A)

In addition to the general requirements, the Type A office shall provide a minimum of 450 ft^2 of floor space with two outside doors, six windows and be furnished as follows:

1. A slant top drafting table, 36-in. x 72-in. minimum size, two plan racks and a closet equipped with a lock.
2. Two office type desks, minimum top dimensions 30-in. x 60-in., with two or more drawers on each side.
3. Four desk chairs on casters with adjustable height tilt seat.
4. Four stools (Drafting table type).
5. One fire resistant drawer-type safe, legal size, with combination lock. Combination to be reset at the direction of the Engineer and revealed only to them.
6. A utility table 30 in. high, minimum top size 30-in. x 60-in.
7. Two legal size, fire-resistant metal filing cabinets, 4 drawer, with locks.
8. An electric sanitary hot and cold water cooler, supplied with cups and drinking water, a 3 ft^3 capacity refrigerator with freezer compartment and a 1 ft^3 capacity microwave oven.
9. An electric adding machine, tape type, with tape.
10. Office equipment as follows:
    (a) A fully automatic electric calculator, with printout and sufficient supply of tapes.
    (b) Quantity Control Ledger covers, National model no. 94-592 or approved equal. QCL covers shall become the property of the Department.
    (c) A smoke alarm capable of being heard 500 ft away.
    (d) 2 portable amber colored strobe lights for mounting on vehicles.
11. Safety helmets and safety vests for all Department Construction personnel assigned to the project. The safety equipment will not carry any marking such as the name of the Contractor and shall remain the property of the Contractor after completion of the project.
12. A trailerized office shall be provided with a one half bath that shall consist of a full size water closet and a porcelain steel lavatory recessed in a plastic top. The drain and vent lines shall be A.B.S. plastic and supply lines shall be type L copper. A 6-gallon electric water heater shall be provided.
13. First Aid Kits shall be provided in the amount and with contents as specified in the current requirements of the Massachusetts Department of Labor and Industries regulations.
14. One new or like new Survey Transit, complete with tripod and storage container, for the exclusive use of the Resident Engineer for the duration of the contract. The transit shall be suitable for Construction Surveys, to establish line and grade, equipped with horizontal

circle direct-reading to 1 minute and vernier calibrations graduated to at least 20 seconds, a vertical angle gradation with vernier to 30 seconds, crosshairs for stadia measurements, optical plumbing capability. A compatible level rod with a minimum length of 12 ft shall also be supplied for setting elevations for structures, grades, and stakes.

15. One 2-ft electronic smart level, one 100-ft steel tape, one 100-ft cloth tape and one plumb bob.
16. One electrostatic or plain paper copier capable of producing 8.5-in. x 11-in., or 8.5-in. x 14-in. copies. Included shall be the cost of paper and chemicals. The total cost for the paper and chemicals shall not exceed $500, for the life of the project. Only one copier will be required if there is more than one Field Office in the Contract.
17. The Contractor shall assume the cost of all equipment, including installation, service, maintenance, and removal. A working telephone with an answering machine shall be provided at the Engineer's Field Office.
18. The following materials testing and sampling equipment shall be supplied if the Contract specifies 150 yd³ of cement concrete or more and does not require a Materials Laboratory.
    (a) One Air Meter ¼ ft³ Press-Ur-Meter Type (Ref. AASHTO T 152 and ASTM C231).
    (b) Two Concrete Curing Boxes meeting the requirements of AASHTO T 23, Section 9.
    (c) A Quick Check Air Indicator Kit meeting the requirements of AASHTO T 199.
    (d) One complete Slump Test Outfit (Ref. AASHTO T 23 and T 119M/T 119), as follows:
        - A slump cone of seamless spun metal, with handles and foot clamps.
        - A tamping rod, 24 in. long, ⅝-in. diameter, with hemispherical end.
        - A sturdy pan, 14 gauge metal, with reinforced rims (24 in. x 24 in. x 3 in.).
        - A brass-wire briquette brush.
        - A wooden handled steel trowel, 3.5 in. x 7 in.
    (e) One wheelbarrow, minimum 2 ft³ volume.
    (f) One longhandled shovel.
    (g) If 150 yd³ of lightweight concrete are specified in the Contract, the following shall be supplied:
        (1) One Roller Meter type air meter (Ref. AASHTO T 196M/T 196).
        (2) One Unit weight bucket (Ref. AASHTO T 121M/T 121).
        (3) One platform beam scale, capacity 200 lb, sensitivity 0.01 lb, with two beams at front of platform, reading to 20 lb by single pounds and to 1 lb by 0.01 lb, with additional hanger weights to fulfill capacity of 200 lb; all parts to be of steel with enclosed weighing mechanism, platform to be 12.5 in. x 14 in. A digital platform scale, with a minimum capacity of 200 lb, with similar sensitivity can be substituted. Scale must be calibrated immediately prior to start of Contract.
19. The following shall be supplied if the Contract specifies painting of bridges:
    (a) Two Each Wet Film Thickness gauges (1 to 13 mils range).
    (b) One Dry Film Thickness Gauge (Tooke Mark III or equal) equipped with spare set of cutting tips.
    (c) One Dry Film Thickness (Gauge Nordsen or Inspector Model III) range 0 to 25 mils.
    (d) One Sling Psychrometer.
20. The following sampling containers are to be supplied in the minimum quantity listed and more as needed to complete the project. All unused containers remaining at the close of the project shall be delivered to the District laboratory and become property of the Department.

(a) Flat Bottom Poly Lined Kraft Paper Bags capable of holding 60 lb of soil or aggregates with dimensions of at least 12 x 3 x 25 in. Supply a minimum of 50 bags.
(b) 4-in. or 6-in. Plastic Cylinder Molds and Covers meeting the requirements of AASHTO M 205M/M 205 and approved for use by RMS. Supply 5 cylinders molds per 150 yd^3 of concrete placement or fraction thereof with a minimum of 50 molds.
(c) 1-qt Metal Cans with friction top covers. Supply a minimum of 12 cans when the contract specifies bridge painting.
(d) 1-qt Wide Mouth Plastic Bottles and Covers designed to hold acid. Supply a minimum of 12 bottles when the contract specifies bridge painting or traffic paint.
(e) Cardboard Sample Boxes for hot mix asphalt. The sample boxes shall have dimensions of at least 17 x 12 x 4.5 in. and fold to provide a tight closure for transporting. Supply a minimum of 25 boxes.

740.42: Engineers Field Office (Type B)

Engineers Field Office (Type B) shall be equipped as described in 740.41: Engineers Field Office (Type A) except that the minimum floor space shall be 350 ft^2.

COMPENSATION

740.81: Basis of Payment

Payment for work under these items will be at the respective contract unit bid price for Engineer's Field Office and Equipment (Type A) and Engineering Field Office and Equipment (Type B).

Payment as described above shall be compensation for all services (heat, gas, light, water, sanitary, telephone, etc.) for all labor, material, fencing, surfacing, equipment service (including general inside cleaning at least once each week) and incidentals necessary to provide, equip, maintain, insure, remove and dispose of the buildings and clean the site as specified and directed. The contract unit bid price will prevail for buildings built or furnished as described, for equivalent trailer space, or office space rented in existing buildings, when such substitution has been approved.

740.82: Payment Items

740. Engineer’s Field Office and Equipment (Type A).....Month
741. Engineer’s Field Office and Equipment (Type B).....Month

SUBSECTION 746: TRANSPORTATION VEHICLE

DESCRIPTION

746.20: General

This item consists of furnishing and maintaining a current model vehicles equipped with strobe lights for the use of Department personnel assigned to the project.

MATERIALS

746.40: General

'The vehicle may be any medium size air conditioned six-cylinder four-door sedan, van, or other type vehicle capable of transporting four persons in comfort and protected against the elements.

The vehicle will be registered in Massachusetts and it shall be the Contractor's responsibility to pay all fees, insurance charges, fuel, lubricants and maintenance costs necessary to provide a legally operable vehi-cle acceptable to the Engineer. The vehicle will be made available from 15 days after receipt of the executed contract to 45 days after completion of the project.

746.41: Office Van

The van shall have a minimum wheel base of 125 in. and be modeled as follows:

1. A ¾-in. plywood overflooring to which the furniture is securely bolted.
2. A 4-ft sliding door with window on the side as well as rear doors with windows.
3. Secure locking on all doors.
4. An independent switch for an overhead dome light.
5. The van shall be furnished with a knee hole desk and a 2-drawer file cabinet which are fastened down, a ¾-in. plywood table with formica top and a swivel chair without casters that is movable.
6. Safety equipment shall be furnished with the Van and shall remain the property of the Contractor after completion of the project, safety helmets and safety vests for all Department Construction personnel assigned to the project. The safety equipment will not carry any marking such as the name of the Contractor.

CONSTRUCTION METHODS

746.60: General

The vehicle will be for the exclusive use of the Resident Engineer and their assistants to accommodate their official transportation requirements on and off the project site including portal to portal travel between the project site and the assigned personnel's residence. The vehicle shall not be utilized for non-official or personal use by an individual while it is assigned to this project.

The vehicle shall be used for the transportation of materials and/ or samples for testing and also for transportation to properly supervise the coordination of Traffic Police and Safety Functions.

The vehicle shall be maintained in a good state of repair at all times and serviced at the regular intervals recommended by the vehicle manufacturer. Work schedules of the Engineer and/or their assistants will be arranged so that the vehicle will be available for regular maintenance at the scheduled times.

Public Liability and Property Damage Liability Insurance shall be provided throughout the term of this project to the minimum limits established below.

Table 746.60-1: Transportation Vehicle Liability Insurance Requirements

Type	Minimum	Maximum
Public Liability	$250,000/person	$500,000/accident
Property Damage Liability	$50,000/accident	$200,000/accident

Said insurance shall be maintained in full force and effect during the life of the contract and shall protect the Resident Engineer, their assistants or any other authorized State Driver for personal injury and wrongful death and for damages to property arising in any manner from their negligence or wrongful acts or failures to act. Such insurance against legal liability shall indemnify and save harmless the Commonwealth and any or all of the officers, agents and employees thereof resulting out of or in consequence of the acts, or failures to act, on the part of the Commonwealth.

COMPENSATION

746.80: Method of Measurement

Transportation shall be measured by the month per vehicle and shall be the actual number of months each vehicle is required and available to the Engineer.

746.81: Basis of Payment

Transportation Vehicles will be paid for at the contract unit price bid per month for each vehicle, which price and payment shall be full compensation for the vehicle including all fees, insurance costs, maintenance costs, fuel and lubrication costs, repair costs and all other incidental expenses necessary to provide a legally operable vehicle to the satisfaction of the Engineer.

746.82: Payment Items

*746.___ Transportation Vehicle No. ___ .....Month
746.6 Transportation Office Van .....Month

*Item number will differentiate to indicate number of transportation vehicle.

SUBSECTION 748: MOBILIZATION

DESCRIPTION

748.20: General

This item shall consist of preparatory work and operations including, but not limited to, those necessary for the movement of personnel, equipment, supplies, and incidentals to the project site, for the establishment of all contractor's field offices, buildings, and other facilities necessary for work on the project and all other work and operations which must be performed or for costs which must be incurred prior to beginning work. The unit bid price for Item 748, Mobilization shall not exceed 3% of the contract bid total, exclusive of this item. Failure to observe this requirement may result in rejection of the bid in accordance with Subsection 2.04: Preparation of Proposals.

CONSTRUCTION METHODS

748.60: General

The work required to provide the above facilities and services for Mobilization shall be done in a safe and workmanlike manner and shall conform with any pertinent local or state law, regulation or code. Good housekeeping consistent with safety shall be maintained.

COMPENSATION

748.80: Method of Measurement

Payment for Mobilization will be made on a lump sum basis.

748.81: Basis of Payment

1. The first payment of one third of the lump sum price for Mobilization or 1% of the total bid price, whichever is less, will be made on the first estimate.
2. The second payment of one third of the lump sum price for Mobilization or 1% of the total bid price, whichever is less, will be made following the completion of 5% of the total Contract price.
3. The third payment of one third of the lump sum price for Mobilization or 1% of the total bid price, whichever is less, will be made following the completion of 10% of the total Contract price.
4. Upon completion of all the work on the project, payment of any amount bid for Mobilization in excess of the total amount previously paid, will be paid by the Department.

748.82: Payment Items

748. Mobilization .....Lump Sum

SUBSECTION 751: LOAM

DESCRIPTION

751.20: General

The work under this item consists of furnishing and placing loam and related items on an approved area in accordance with these specifications and in close conformity with the lines and grades shown on the plans or established by the Engineer. The work includes the placing, spreading and grading of loam for seeded and planted areas, preparation of soil for plant material, amendment of loam as required to produce planting soil mix, and provision of soil additives required to adjust for pH requirements of specific plants.

MATERIALS

751.40: General

Material shall meet the requirements specified in the following Subsections of Division III, Materials:

Loam.....M1.05.0
Organic Soil Additives.....M1.06.0
Inorganic Amendments.....M6.01.0

Samples and Submittals

At least 30 days prior to ordering, the Contractor shall submit to the Engineer representative samples, certifications, and certified test results for materials as specified below. No materials shall be delivered until the required submittals have been reviewed and approved by the Engineer. Delivered materials shall closely match the approved samples. Approval of test results does not constitute final acceptance. The Engineer reserves the right to reject on or after delivery any material which does not meet the Specifications.

Soil Additives for Loam

Additives shall be used to counteract soil deficiencies as recommended by the soil analysis.

Organic matter used as an amendment to soil shall be manufactured compost.

Lime or sulfur shall be used to bring soil to acceptable pH levels, per soil test reports.

For soils with more than 20% passing the No. 200 sieve, gypsum shall be added at a rate of 3.2 pcf.

Soil amendments shall be incorporated thoroughly into loam to meet the specified requirements for loam prior to delivering the material on site.

751.60: Preparation of Areas on which Loam is to be Placed

All areas to receive loam shall be free of construction debris, refuse, compressible or decayable materials and standing water. The area upon which the above materials are to be placed shall be raked, harrowed or dragged to form a smooth surface. All stones, undesirable growth and debris larger than 2 in. in diameter shall be removed from the area and disposed of by the Contractor outside the location.

Grade stakes shall be set to check grades. Deviation from lines and grades that are greater than 1 in. shall not be permitted.

When directed by the Engineer, additional suitable material available from excavation or furnished under Item 150, Ordinary Borrow, shall be spread as required to repair gullies or depressions. The labor, equipment and materials necessary to place, compact and grade the additional material shall be paid for under the respective item from which the material is obtained.

751.61: Placing Loam

The Contractor shall notify the Engineer when areas to receive loam are ready for inspection and approval. Placement of loam fill material shall not begin until the Engineer has approved the grading of the material that the loam is placed upon.

Loam shall not be handled or placed when the ground or the loam is frozen or saturated, i.e. when squeezed sample shows any sign of free moisture.

The Engineer shall approve the use of the Contractor's equipment. Any equipment or procedures that are likely to damage or over-compact underlying structure or materials shall be rejected.

Loam shall be placed in lifts not to exceed 4 in. After each lift, the soil shall be thoroughly mixed into the soil layer beneath it. Compaction of each lift shall be minimal, sufficient only to achieve the required grades. Over-compaction of existing soils or fills that would be detrimental to planting objectives shall be corrected by tilling or other means at no additional cost.

Grade stakes shall be set to check finished grades. Deviation from lines and grades that are greater than 1 in. shall not be permitted.

The Contractor shall supply additional loam as necessary so that following finish the grading and compaction operations, the placed loam shall conform to the depth required.

Finish grades shall exhibit no abrupt changes and shall blend in evenly with the undisturbed grade of the ground at the limits of work.

During hauling operations, the roadway surfaces shall be kept clean and any loam or other dirt which may be brought upon the surface shall be removed promptly and thoroughly before it becomes compacted by traffic. If necessary, the wheels of all vehicles used for hauling shall be cleaned frequently and kept clean to avoid bringing any dirt upon the surface. The Contractor shall take all reasonable precautions to avoid injury to existing or planted growth.

COMPENSATION

751.80: Method of Measurement

The quantity of Loam for Roadsides and Loam for Lawns shall be determined by measurement in place after compaction to the depth specified on the plans or as directed, and there shall be no additional compensation to account for such loss as may be due to settlement, shrinkage and penetration into the underlying material.

751.81: Basis of Payment

Loam for Roadsides and Loam for Lawns will be paid for at the contract unit price per cubic yard, complete in place, which prices shall include all testing, analysis and the grading of areas where stockpiles of topsoil are removed.

751.82: Payment Items

751.	Loam for Roadsides	Cubic Yard
751.1	Loam for Lawns	Cubic Yard

SUBSECTION 760: IMPERVIOUS SOIL BORROW

DESCRIPTION

760.20: General

This work shall consist of furnishing and placing impervious soil borrow in accordance with these specifications and in close conformity with the lines and grades shown on the plans or established by the Engineer.

MATERIALS

760.40: General

Impervious Soil Borrow shall meet the requirements specified in M1.08.0: Impervious Soil Borrow of Division III, Materials.

CONSTRUCTION METHODS

760.60: General

Impervious Soil Borrow shall be placed and compacted as specified in 751.60: Preparation of Areas on which Loam or Topsoil are to be Placed.

COMPENSATION

760.80: Method of Measurement

Impervious Soil Borrow shall be measured as specified in 751.80: Method of Measurement.

760.81: Basis of Payment

Impervious Soil Borrow shall be paid for at the contract unit price per cubic yard under the item for Impervious Soil Borrow, complete in place, even if the impervious soil borrow is obtained from Muck Excavation.

760.82: Payment Items

760. Impervious Soil Borrow ..... Cubic Yard

SUBSECTION 765: SEEDING

DESCRIPTION

765.20: General

This work shall consist of seeding certain areas at the locations indicated on the plans or designated by the Engineer, in accordance with these specifications.

MATERIALS

765.40: General

Materials shall meet the requirements specified in the following Subsections of Division Ill, Materials:

Limestone M6.01.0
Fertilizer M6.02.0
Grass Seed M6.03.0
Short-Term Erosion Control Seed M6.03.1

CONSTRUCTION METHODS

765.60: General

The Contractor shall not proceed with the work of seeding until permission of the Engineer has been obtained.

Before the application of limestone, fertilizer and seed, the Contractor shall harrow or roto-till to a depth of 3 in., when directed, all areas where loam or topsoil, has been placed under a previous contract when such areas are to be prepared for seeding under this contract. When loam borrow is placed, or topsoil is rehandled and spread; and they are paid for under the respective items of a contract, they will not require harrowing or roto-tilling.

The Contractor shall remove all debris and stones having any dimensions greater than 2 in. before the application of limestone, fertilizer and seed.

765.61: Application of Limestone

Limestone may be applied in dry form or hydraulically as provided in 765.65: Seeding Grass by Spray Machine. Limestone where necessary shall be spread and thoroughly incorporated in the layer of loam or topsoil to adjust the acidity of the loam or topsoil. The rate of application of the limestone will vary up to a maximum of 1 lb per yd^2 depending on the results of laboratory tests conducted by the Department. The limestone shall be thoroughly incorporated into the layer of loam or topsoil and the upper 1 in. of the underlying subsoil by harrowing or other methods satisfactory to the Engineer so as to provide a layer of thoroughly mixed material for the seed bed.

765.62: Application of Fertilizer for Grass

Fertilizer may be applied in dry form or hydraulically as provided in 765.65: Seeding Grass by Spray Machine.

After the application of limestone, if found necessary, on the seed bed, fertilizer shall be spread on the top layer of loam or topsoil at the rate of 800 lb per acre and worked into the seed bed. The full depth of loam or topsoil shall then be spaded or harrowed and graded to the required cross section.

765.63: Seeding Grass

After the loamed or topsoil areas have been prepared and treated as hereinbefore described, grass seed conforming to the respective formulas hereinbefore specified shall be carefully sown thereon at the rate as specified by the supplier. Seeding shall be done in two directions at right angles to

each other. Seeding on level areas and on slopes up to and including 4:1 slopes shall be done by means of an approved seeder that will seed and roll in one operation. On shoulders and other narrow areas, the seeding may be done longitudinally in one application.

765.65: Hydroseeding

A hydroseed machine approved by the Engineer and designed specifically for seed dissemination may be utilized. The application of limestone as necessary, fertilizer as necessary and grass seed may be accomplished in one operation by the use of the approved hydroseed machine. The materials shall be mixed with water in the machine and kept in an agitated state in order that the materials may be uniformly suspended in the water. The spraying equipment shall be so designed that when the solution is sprayed over an area the resulting deposits of limestone, fertilizer and grass seed shall be equal in quantity to those quantities specified above in 765.61: Application of Limestone, 765.62: Application of Fertilizer for Grass and 765.63: Seeding Grass.

A certified statement shall be furnished, prior to start of work, to the Engineer by the Contractor as to the number of pounds of limestone, fertilizer, and grass seed, per 100 gal of water.

This statement should also specify the number of square yards of seeding that can be covered with the solution specified above.

If the results of the spray operation are unsatisfactory, the Contractor will be required to abandon this method and to apply the limestone, fertilizer and seed in accordance with the requirements of 765.61: Application of Limestone, 765.62: Application of Fertilizer for Grass and 765.63: Seeding Grass.

765.66: Care During Construction

The Contractor shall be responsible for the watering of all seeded and grassed areas which shall be kept moist. The Engineer's decision will prevail in the event a dispute develops with the Contractor as to whether or not the seeded and grassed areas are moist. Seeded areas on which growth has started shall be watered to a minimum depth of 2 in. to assure continuing growth. Watering shall be done in a manner which will provide uniform coverage, prevent erosion due to application of excessive quantities over small areas, and pre-vent damage to the finished surface by the watering equipment. The Contractor shall furnish sufficient watering equipment to apply one complete coverage to the seeded areas in an 8-hour period.

If necessary, suitable signs and barricades of brush or other materials shall be placed to protect the seeded areas.

After the grass has appeared, all areas and parts of areas which fail to show a uniform stand of grass, for any reason whatsoever, shall be reseeded and such areas and parts of areas shall be seeded repeatedly until all areas are covered with a satisfactory growth of grass.

The Contractor shall care for all of the seeded areas until the work has been physically accepted, without compensation in addition to the amount regularly to be paid under this item as hereinafter provided. Care shall include all regrading, refertilizing, reseeding and mowing which may be necessary.

Prior to the acceptance of the project the Contractor will be responsible for mowing the grass when necessary on all flat or rolling slopes from level to and including 4 to 1 slopes to a height of 3 in.

when the grass has attained a height of 8 in. The grass on all slopes steeper than 4 to 1 shall be cut when necessary to a height of 3 in. at such a time as a stable turf has been established in the Engineer's judgment.

765.67: Liability

A satisfactory stand of grass, as determined by the Engineer, shall be required. To be acceptable, a stand of grass shall consist of a uniform stand of at least 60% established permanent grass species, with a uniform count of at least 100 plants per ft^2.

When all items of the contract, including the work specified under this item, have been acceptably completed except that a satisfactory stand of grass has not been produced, the contract may be accepted.

COMPENSATION

765.80: Method of Measurement

The quantity of Seeding shall be the number of square yards based on actual measurements made over the general contour of the areas seeded, complete in place, and accepted.

765.81: Basis of Payment

Payment for Seeding and Seeding for Short Term Erosion Control, including all mowing, will be paid for at the contract unit price per square yard, complete in place. When a satisfactory stand of grass has not been established at the time of acceptance, no payment for seeding shall be allowed at the time of acceptance. At the time the final estimate is ready to be forwarded to the Contractor the seeded areas will again be inspected by the Engineer and the seeded areas with a satisfactory stand of grass will be included for payment.

765.82: Payment Items

765.	Seeding	Square Yard
765.2	Seed for Short-Term Erosion Control	Square Yard

SUBSECTION 766: REFERTILIZATION

DESCRIPTION

766.20: General

This work shall consist of an application of fertilizer to seeded areas as indicated on the plans, or as designated by the Engineer, and in accordance with these specifications.

MATERIALS

766.40: General

Materials shall meet the requirements specified in the following Subsection of Division III, Materials.

Fertilizer M6.02.0
Seed M6.03.0

CONSTRUCTION METHODS

766.60: General

Work under this item shall be done in April, May, August or September. No permission will be granted to refertilize in months other than herein prescribed. Areas recently seeded shall be refertilized only after one season of growth of two months duration.

766.61: Application of Fertilizer

The fertilizer shall have a composition of 10-10-10 and be applied at a rate of 500 lb per acre. In addition, organic fertilizer derived from any commercial source shall be applied at the rate of 135 lb of N per acre.

766.62: Seed

Seed shall be included with the fertilizer at a rate of 10 lb per acre.

COMPENSATION

766.80: Method of Measurement

The quantity of Refertilization shall be the number of square yards based on actual measurements made over the general contour of the seeded areas, complete in place.

766.81: Basis of Payment

The work under this item will be paid for at the contract unit price per square yard, complete in place, which price shall include all labor, materials and equipment necessary to do the required work.

766.82: Payment Items

766. Refertilization ..... Square Yard

SUBSECTION 767: MULCHING AND EROSION CONTROL

DESCRIPTION

767.20: General

This work shall consist of furnishing and placing hay, straw, wood chip, wood fibre or aged pine bark mulch, as particularly specified, in the required amounts on the areas indicated on the plans or as directed.

MATERIALS

767.40: General

Materials shall meet the requirements specified in the following Subsections of Division Ill, Materials:

Hay Mulch M6.04.1
Straw Mulch M6.04.2
Wood Chip Mulch M6.04.3
Wood Fibre Mulch M6.04.4
Aged Pine Bark Mulch M6.04.6

Bales of Hay for Erosion Control shall be fastened with wire and have a minimum size of 1.0 ft by 1.5 ft by 3.0 ft.

CONSTRUCTION METHODS

767.60: Preparation for Mulching

The areas upon which mulch is to be spread shall be prepared by raking, harrowing or dragging to form a reasonably smooth surface. All stones larger than 2 in., undesirable growth over 2 in. in height and all debris shall be removed from the area and disposed by the Contractor in a satisfactory manner. The disposal area shall be outside the location limits of the project, when required by the Engineer and shall be the responsibility of the Contractor without additional compensation.

When required by the Engineer, the Contractor. shall spread, compact and grade additional acceptable material to repair gullies or depressions. Such additional material shall be obtained from suitable excavation or furnished by the Contractor under Item 150., Ordinary Borrow. The labor and equipment required to furnish and place the additional material shall be paid for under the respective item from which the material is obtained without additional compensation.

Grading preparatory to mulching will be included for payment under respective items of mulching.

767.61: Placing Mulch

Hay or Straw Mulch shall be loosely spread to a uniform depth over all areas designated on the plans, at the rate of 4.5 tons per acre, except over certain selected seeded areas where 2 tons of hay per acre shall be used, or as otherwise directed.

Hay or Straw Mulch may be applied by mechanical apparatus, if in the judgment of the Engineer the apparatus spreads the mulch uniformly and forms a suitable mat to control slope erosion. The apparatus shall be capable of spreading at least 80% of the hay or straw in lengths of 6 in. or more, otherwise it shall be spread by hand without additional compensation.

Wood Chip Mulch and Aged Pine Bark Mulch shall be loosely spread to a uniform depth over all areas designated on the plans, at the rate of 390 yd^3 per acre (approximately 3 in. in depth), or as otherwise directed.

Wood Chip Mulch and Aged Pine Bark Mulch may be applied by mechanical means, except that if the equipment breaks the mulch into small pieces or changes its desired texture, as determined by the Engineer, it shall be spread by hand without additional compensation.

Wood Fibre Mulch shall be uniformly spread over certain seeded areas at the minimum rate of 1,400 lb per acre. It shall be placed by spraying from an approved spraying machine having pressure sufficient to cover the slopes from bottom to top in one operation. Immediately before spraying, the mulching material shall be mixed with water in the sprayer and kept uniformly suspended in the water by agi-tation during the spraying operation.

767.62: Hay Mulch with Seed for Short Term Erosion Control

The intent of these items is the prevention of slope erosion. If the sequence of operations is such that only portions of slopes have been completed, such portions shall be preserved by seeding and mulching when directed prior to completion of the remaining portions of the slope.

The work to be done under the above items consist of applying seed and hay mulch onto slopes that have been graded and completed to the required line and grade at locations designated on the plans and as directed by the Engineer.

The operations shall be separate with the seed applied first. This work may be applied by hand or by mechanical apparatus, if in the Engineer's judgment, the apparatus spreads the materials uniformly and does not break the hay mulch into fine or small particles or otherwise change the desired texture of the hay mulch.

The seed shall be uniformly applied at the rate of 75 lb per acre.

767.63: Bales of Hay for Erosion Control

Bales of hay shall be supplied and placed along the bottom of slopes, ditches and where directed. The bales shall be securely fastened in place by staking or pinning as shown on the plans or in a manner approved by the Engineer.

During the course of construction, it may be necessary to remove and relocate or replace bales of hay as directed.

The removal of collected sedimentation and debris from behind these bales and disposal of same is included in this item.

The bales shall remain in place until the removal is directed by the Engineer. The bales shall then become the Contractor's property and shall be disposed of off the site.

COMPENSATION

767.80 Method of Measurement

Hay Mulch and Straw Mulch will be applied as required and measured by the ton delivered on the site as determined from certified weight slips, or by the square yard, or by the acre, depending on the payment item.

Wood Chip Mulch and Aged Pine Bark Mulch will be measured by the cubic yard based on either truckload measurements delivered on the project or in place measurement, the method of measurement to be determined by the Engineer.

If truckload measurement is used, wood chip mulch taken from this measured volume for mulching trees and shrubs other than placed in mass planting areas will be deducted on the basis of the volume of chips placed over the rated size of each planting pit at a depth of 4 in.

No deduction shall be made in mass planting areas for wood chip mulch ordinarily included in the unit price of the trees or shrubs planted therein.

Wood Fibre Mulch will be measured by the ton delivered on the project, as determined from the net weight certified by the manufacturer on the containers, or as determined from weight slips accompanying delivery.

Bales of Hay for Erosion Control will be measured by the unit in place, each.

Ordinary Borrow will be measured as specified in 150.80: Method of Measurement or by truck load measurement, as determined by the Engineer.

767.81: Basis of Payment

Hay Mulch and Straw Mulch will be paid for, complete in place, at the contract unit price.

Wood Fibre Mulch will be paid for, complete in place, at the contract unit price per ton.

Wood Chip Mulch will be paid for complete in place at the contract unit price per cubic yard.

Aged Pine Bark Mulch will be paid for complete in place at the contract unit price per cubic yard.

Bales of Hay for Erosion Control will be paid for each, which shall include all labor, material and equipment necessary to place the bales, relocate as directed and finally remove and dispose of the bales including the removal of sedimentation from behind the bales of hay.

Replacement of Bales of Hay, when directed, will be paid for each.

Ordinary Borrow will be paid for complete in place at the contract unit price per cubic yard.

767.82: Payment Items

767.	Hay Mulch	Ton
767.1	Hay Mulch	Acre
767.2	Hay Mulch	Square Yard
767.3	Straw Mulch	Ton
767.31	Straw Mulch	Square Yard
767.32	Straw Mulch	Acre
767.4	Wood Chip Mulch	Cubic Yard
767.5	Wood Fibre Mulch	Ton
767.6	Aged Pine Bark Mulch	Cubic Yard
767.8	Bales of Hay for Erosion Control	Each

SUBSECTION 769: PAVEMENT MILLING MULCH UNDER GUARDRAIL

DESCRIPTION

769.20: General

The work shall consist of placing a geotextile fabric under guard rail and placing 4 in. of pavement millings on top of the fabric.

MATERIALS

769.40: General

Pavement milling mulch shall meet the requirements specified in M1.10.0: Pavement Milling Mulch.

The geotextile fabric shall conform to M9.50.0: Geotextile Fabrics for Stabilization Fabric.

CONSTRUCTION METHODS

769.61: General

The mulched area will generally be 3 ft wide and start at the back of the berm, sloped edging, curb or edge of roadway pavement. In end treatment areas where the guard rail is set back from the edge of roadway, the mulch will extend from the edge of roadway to 6 in. behind the back of the guard rail posts.

769.62: New Guard Rail

Where the milling mulch is being placed at locations of new guard rail installation, the fabric and millings shall be placed prior to placing the guard rail. When posts are to be driven, the millings shall be moved aside in the vicinity of the post, the fabric cut, and then the posts shall be driven. After the posts are driven, the millings shall be raked closely around the posts.

769.63: Existing Guard Rail

Where the milling mulch is to be placed in locations of existing guard rail, the fabric shall be placed on both sides of the post and shall be cut at the posts to allow the fabric to lay flat between the

posts, and to overlap a minimum of 1 ft. The millings will then be placed and raked closely around the posts.

COMPENSATION

769.80: Method of Measurement

The quantity of pavement milling mulch shall be the number of feet based on actual measurements made along the guard rail.

769.81: Basis of Payment

The work under this item shall be paid for at the contract unit price per foot complete in place, which price includes the geotextile fabric, pavement millings, and all related excavation, borrow, and grading.

769.82: Payment Items

769. Pavement Milling Mulch Under Guard Rail.....Foot

SUBSECTION 770: SODDING

DESCRIPTION

770.20: General

The work shall consist of the construction of lawn sod as required, on the areas indicated on the plans, or as designated by the Engineer, and in accordance with these specifications.

MATERIALS

770.40: General

Materials shall meet requirements specified in the following Subsections of Division III, Materials:

Loam Borrow.....M1.05.0
Topsoil.....M1.07.0
Sod M6.05.0
Seed M6.03.0

CONSTRUCTION METHODS

770.61: Laying Sod

A foundation for the sod shall consist of loam borrow or topsoil rehandled and spread in quantities sufficient to produce a depth of at least 4 in. after tamping and natural settlement as taken place for 1 month. Soil surface shall have a continuous surface free of stones, sticks or roots greater than 2 in. in any dimension, without voids or irregularities. Prior to placement of sod, loam shall be lightly scarified with a rake and watered lightly.

Fresh sods shall then be placed in final position on the designated areas. All sods shall be harvested, delivered and installed within 48 hours. Planting season for sod shall be from April 15 to June 1 and

from August 15 to November 1. Any requests to deviate from this schedule must be submitted by the Contractor to the Engineer in writing.

When air temperature exceeds 90°F, the period of time from harvest to installation shall be less than 24 hours. Sod shall not be planted in soil with a temperature greater than 90°F.

Work shall progress in such a manner that workers are not walking on installed sod. Sod shall be placed parallel with the contour. Vertical joints between sods shall be staggered. Ends and sides of sod shall be butted closely together so that sod is not stretched and ends do not dry out. Contractor shall use full pieces throughout, and trim excess with clean straight cuts. Waste sod and scraps shall not be assembled to create a new piece. All sods shall be very carefully handled, to prevent loosening and separation of the loam from the roots.

The combined thickness of the sod and loam shall be at least 6 in. The sod shall be settled by watering it and by tamping on a board laid over it.

If sod cannot be installed immediately upon arrival to the site, the sod shall be stored in a shaded location, sprinkled with water, and covered with burlap, straw or other acceptable material which shall be kept moist when required and as directed. The sod shall be placed in layers so that the grassy side of the first or bottom layer shall be uppermost, whereas in the next succeeding layer the roots shall be uppermost, and so on in such a manner as to place the grass or roots of each succeeding layer in immediate contact with the corresponding surface of the preceding layer. The sod shall not be stored in such a manner to compress the thickness of sod below 2 in.

770.62: Fastening Sod to Slopes

On slopes steeper than 3:1, sod shall be held securely in place with wooden pegs. The pegs shall be placed at intervals not greater than 3 ft. Pegs shall be at least 1 ft in length, driven flush with the surface of the sod. Other approved methods of fastening sod to slopes may be used where pegging is not practicable.

770.63: Surface Dressing of Sodding

When the sod has been set in final position, loam shall be used to fill the joint and as a surface dressing to cover the sodded areas to a depth of about ¼ in. A grass seed mixture conforming to the specifications stated in M6.03.0: Long Term Seed Mixes for Lawns and Slopes for Slopes and Shoulders shall be mixed with clean, dry sand or dry sandy loam and sown upon the loam surface dressing at the rate of 0.45 lb per 100 yd^2. The sodded areas shall then be compacted, and the compaction shall be equivalent to that produced by hand roller with a mass of between 75 and 100 lb per ft of width and to produce a smooth, uniform surface.

770.64: Maintenance and Care

The Contractor shall maintain all of the sodded areas for a minimum of 30 days following installation, or until the work has been officially accepted, whichever is longer, without additional compensation. Before acceptance of the work, a satisfactory uniform stand of grass will be required. Partial acceptances will not be granted. Maintenance and care shall be as specified under 765.66: Care During Construction and the following:

If necessary, suitable signs and barricades of brush or other material shall be placed to protect the sodded areas. Barriers shall be removed prior to final inspection.

Maintenance shall include watering, mowing, and any reseeding or resodding determined necessary by the Engineer.

Sod shall be watered in sufficient quantities to maintain adequate soil moisture to a depth of 4 in. Watering shall be done in a manner that will provide uniform coverage, prevent erosion due to application of excessive quantities over small areas, and prevent damage to the turf by the watering equipment.

Mowing shall occur before turf exceeds 5 in. and shall be cut to a height of 3 in.

COMPENSATION

770.80: Method of Measurement

The quantity of sodding shall be the number of square feet based on actual measurements made over the general contour of the areas sodded, complete in place and accepted.

770.81: Basis of Payment

The work involved in sodding will be paid for at the contract unit prices per square yard, complete in place, under the respective items for Lawn Sodding, which prices shall include maintenance, loam for filler and top dressing and seed, except loam used for foundation of sod which will be paid for as Loam Borrow or Topsoil Rehandled and Spread.

770.82: Payment Items

770. Lawn Sodding ..... Square Yard

SUBSECTION 771: PLANTING TREES, SHRUBS AND GROUNDCOVER

DESCRIPTION

771.20: General

This work shall consist of furnishing, planting and/or transplanting specified trees, shrubs, vines and ground cover to locations as shown on the plans and/or as directed by the Engineer.

The work shall include excavation of pits, placing of backfill mixture, mulching, watering, staking or guying, wrapping for transport, adding fertilizing and/or other soil amendments, seeding, weeding, watering, care of the plants, and replacement of unsatisfactory plants and materials during the life of the contract.

The Contractor performing work under this Section shall have five years continuous experience and expertise in management, handling and installation of ornamental plant material in large-scale landscape construction projects. Site foreman shall have at least five years' experience, able to read and interpret plans, and shall be on-site during all times of plant installation.

MATERIALS

771.40: General

Materials shall meet the requirements specified in the following Subsections of Division III, Materials with the amendments and supplements contained herein:

Loam Borrow.....M1.05.0
Organic Soil Additives.....M1.06.0
Inorganic Amendments.....M6.01.0
Fertilizer.....M6.02.0
Wood Chip Mulch.....M6.04.3
Aged Pine Bark Mulch.....M6.04.5
General Planting.....M6.06.0
Nursery Stock – General.....M6.06.1
Wrapping for Transport.....M6.07.1
Materials for Guying and Staking.....M6.08.0
Water for Irrigation.....M6.09.0

The Contractor shall furnish written certificates of compliance, including nursery shipping lists, in triplicate for each load of plant material showing where the plants were grown and listing all transplantings, age or size as specified, grade and quantity. All plants shall be tagged with botanical name, including cultivar, and size so that proper identification can be made.

All plants shall be northern grown nursery stock. The American Standards for Nursery Stock (ANSI Z60.1) shall serve as the Department's standard for plants and for plant, root ball, and container size, as well as growth and form requirements.

The latest editions of ANSI A300 Standards Part 1 Pruning and Part 6 Planting and Transplanting shall apply for all work of planting and pruning.

Trees and shrubs shall be balled and burlapped (B&B) or containerized. The caliper, height, age and other dimensions as specified for all planting material shall apply at the time planting is done and the plants will be inspected by the Engineer at this time as to these requirements as well as the quality or grade and varieties required. The Contractor shall remove all plants not approved by the Engineer from the project.

Examination of Conditions

The Contractor shall be responsible for judging the full extent of work requirements involved. This responsibility includes, but is not limited to, the following: transportation, purchase, temporary storage and maintenance of plants; plant rehandling prior to final installation; removal and off-site disposal of existing loam that has been determined unacceptable; purchase, transport, and supply of loam as required for backfill mixing operations.

771.41: Samples and Submittals

The Contractor shall keep the Engineer apprised of the sources and availability of plant material in the Contract. Within 30 days of the pre-construction meeting, the Contractor shall provide nursery supplier lists indicating current and projected availability of all plant material for the project. All the material shall match species, cultivar, sizes and quantities specified in the Contract.

At least 120 days prior to planting, the Contractor shall submit to the Engineer for their approval a watering schedule for all planting in the project. Watering schedule shall include all methods for providing water to plants.

At the same time, the Contractor shall submit a confirmation of availability for all plants on the list, accompanied by nursery sources. When the specified types and sizes of plants are not available, the Contractor may submit written recommendations for substitutions for approval by the Engineer. Substitutions proposed by the Contractor shall have equivalent overall form, height, and horticultural characteristics and must be approved in writing by the Engineer prior to tagging.

For materials other than plants, at least 90 days prior to installation the Contractor shall submit material specifications and (where applicable) installation instructions attesting that the materials meet the requirements specified. No materials shall be ordered until submittals have been approved by the Engineer. Delivered materials shall match the samples. All material samples shall include supplier's literature and certification stating that material meets specifications.

The Contractor shall submit for approval equipment and methods for testing soil moisture and soil pH.

The Contractor shall provide two moisture gauges, including instructions for use and batteries if required, for their use during the duration of the Contract. The meters shall be hand held and shall be capable of measuring moisture at a depth of 6 in. Meter scale shall be sufficient to determine moist, dry, or wet soil. The meters shall be regularly checked for calibration against watered loam and shall be replaced if found faulty at no additional cost.

In addition, the Contractor shall provide to the Engineer one copy of the *American Standard for Nursery Stock*, ANSI Z-60.1, latest edition.

For work requiring an arborist, the Contractor will provide certification of Massachusetts Certified Arborist.

At least 60 days prior to planting, the Contractor shall submit a schedule for tagging material to the Engineer.

Materials may be temporarily stored within the highway layout as directed by the Engineer. Heavy equipment and fill material shall be stored outside of the drip line of existing tree canopy. If materials are stored within the layout, the Contractor shall restore the storage area to its original natural condition at the their expense, including tilling of compacted soils and reseeding .

Arrangements shall be made, to the extent that it is practicable, to have plants delivered as the pits or beds are made ready for them. Delivery of plants shall be made to the site, only according to the Contractor's ability to handle and properly care for them Whenever plants cannot be planted on the day of arrival, all those with bare roots shall be "heeled-in" in moist soil or mulch. The Contractor shall properly maintain all "heeled-in" plants until they are planted. In the event that "heeled-in" plant material must be held over until the next planting season such material shall be lifted and replanted in a satisfactory manner in nursery rows as directed by the Engineer and shall be suitable for transplanting the following season. The root balls of B&B plants not planted immediately after delivery and inspection shall be covered with loam, mulch or wood chips and irrigated until planted. Throughout the work, care shall be taken to keep the roots of all plants from drying out, to

preserve the solidity of the balls of B&B plants, and to prevent plants from being broken, scarred or damaged in any way. All emergency storage of materials shall be at the risk of the Contractor.

For B&B and container shrubs, a representative sample, up to three, shrubs of each species shall be washed of soil media for inspection of Engineer to confirm root conditions. If accepted, the sample plants shall be planted immediately and shall be subject to all planting performance guarantees.

771.42: Backfill Mixture for Plant Material

The Contractor shall provide testing of soils in planting locations. The Contractor shall provide test results and recommendations as necessary for soil amendment to the Engineer for their approval. Backfill shall be a blend of one-part loam borrow, one part organic material and two parts existing subsoil.

CONSTRUCTION METHODS

771.60: General

Furnishing and planting of plant material shall include, but is not limited to, the following: digging of the pits and plant beds; amendment of loam as required to produce planting soil mix; provision of soil additives for pH requirements of specific plants; provision of additional amendments as required, including soil wetting agents; furnishing the plants as specified; plant installation; watering and maintenance, including weeding.

771.61: Seasons for Planting

The purpose of the planting dates is to establish an appropriate period of time for planting. The Contractor may submit request for planting outside the scheduled timeframes in writing to the Engineer for approval. Calendar guidance for planting is as follows:

Table 771.61-1: Calendar Guidance for Planting

Season	Material Type	Planting Dates
Spring	Deciduous Materials	March 21 through June 15
Spring	Evergreen Materials	April 15 through June 1
Fall	Deciduous Materials	October 1 through December 1
Fall	Evergreen Materials	August 15 through October 15

Spring planting for bare root material shall be after the ground has thawed, but before leafing out, approximately mid-March to early April. Fall planting for bare root plants may occur in late October, after leaf drop, through mid-November.

771.62: Plant Tagging and Approval

The Contractor shall locate and tag plants at least one month prior to the expected planting date. The Contractor shall be responsible for tagging the material at the nursery. The Contractor shall request that the Engineer provide a representative to approve tagged stock to be planted under this Section. The Contractor shall be responsible for any expenses associated with any necessary travel and overnight accommodations for the Engineer's representative during the period of time required to locate, select, and approve plant material.

All trees and representative samples of each shrub species on the Plant List shall be tagged by the Contractor at the nursery and approved by the Engineer or their representative, prior to digging, for conformity to specification requirements as to quality, size, and variety. All plants will have labels that list the common name, botanical name, and size.

Approval of tagged material at the nursery shall not prevent the right of inspection and rejection upon delivery at the site or during the progress of the work. Cost of replacement of materials rejected by the Engineer at the site shall be borne by the Contractor.

771.63: Plant Delivery and Planting Preparation

Tree trunks shall be protected during shipping by a heavy walled cardboard sleeve or other suitable material. Plants shall either be shipped in enclosed trucks or all surfaces, leaves and branches shall be wrapped to prevent damage and desiccation. Damaged plants may be rejected by the Engineer at any time.

Locations for all plants shall be approved by the Engineer before any plant pits or plant beds are dug.

The Contractor shall locate all underground utilities within 10 ft of the proposed planting pits and notify the Engineer of any conflicts prior to digging plant pits.

Stake all tree locations, and all shrub and perennial beds, for Engineer approval prior to digging. Contact DIGSAFE and other utilities if coordination has not already occurred for other phases of project.

Prior to the installation of any plant material, the Contractor shall dig test pits and determine percolation rates. Percolation of less than 1 in. per hr shall require corrective measures as recommended by the Contractor and approved by the Engineer.

The Contractor shall notify the Engineer 5 working days prior to the proposed arrival of plant material on the site. All plants shall be planted within 5 days of arrival on site or shall be rejected by the Engineer. Plants stored on site shall be shaded from direct sunlight at all times and shall not be stored on paved surfaces. Plants stored on site shall be watered daily.

771.64: Planting

Pits excavated for plants shall be as shown on the plans. In general, pits shall be 3 times the width of the rootball or plant container. Depth of the pits shall correspond to the height of the rootball, measured from the bottom to the lower extent of the root flare, ensuring that the root flare will not be covered. The sides and bottom of pit shall be scarified to prevent glazed soils.

Plant material installed in infertile or manufactured soils shall have soil modification agents added per manufacturer specifications. After planting, the Contractor shall certify that appropriate agents have been used and properly applied per the manufacturer's specifications. Written certification shall be provided to the Engineer.

Place trees in the center of pit. Place shrubs and perennials in beds as a group, with grouping and spacing as noted on the plans.

For ball and burlap plants, remove all rope and wire baskets from the root balls. Burlap may be removed off the top and sides. Any excess burlap shall be cut away and disposed of offsite. For

container grown plants, score or butterfly cut the rootball of all container-grown plants prior to planting. For peat or other similar degradable containers, remove any portion of the projecting above the level of the soil. All metal, plastic or other non-root-thru type container shall be completely removed during the process of planting.

Prepare planting soil mix as specified above to depths as shown on the drawings. Place backfill mix in layers of not more than 6 in., and water each layer sufficiently to settle soil before the next layer is put in place.

Backfill mix shall meet finished grade after settlement. Shape edge of planting pit to form a saucer for holding water and place mulch as shown in the plans. On steep slopes, the mound around the saucer may be omitted on the uphill side. Do not cover the stem flare of the plants with mulch.

Water plants immediately following planting as necessary to thoroughly moisten rootball and planting soil. The Contractor shall be responsible for furnishing their own supply of water to the site at no extra cost. The Contractor shall, at their own expense, replace any plants injured or damaged due to the lack of water, or due to the use of too much water, as determined by the Engineer.

Plants shall not be wrapped after installation, except as discussed below. Wounds shall not be painted. Trees shall not be staked unless wind or other local conditions require the additional protection.

Once the root ball is placed in the pit and the container, wires and burlap removed, carefully rake the root ball to spread the roots and partially backfill the pit, ensuring that the soil filters in among the roots. The backfill shall be placed with care taken not to injure or bruise the roots.

771.65: Bare Root Planting

Bare root material shall be delivered to the site in a dormant condition. Evergreens will be rejected if the fine roots were lost in digging. All bare root plants shall be prepared with hydrogel at the nursery prior to planting. The backfill mixture of soil placed beneath the plant shall be firmed prior to setting the plant. Do not fertilize bare root plants.

771.66: Staking and Guying and Wrapping

The Contractor shall consult with the Engineer to determine whether wind exposure, potential vandalism, or other conditions warrant tree staking and guying. Evergreen trees up to 4 ft high and deciduous trees up to 6 ft in height shall be supported by one stake driven firmly 2-3 ft into the ground. The stake shall be located far enough from the tree to avoid damaging the roots and so that the top of the stake shall be about two-thirds the height of the tree. The point of attachment to the stake shall not be more than 2 ft from the trunk. Secure the tree to the stake with biodegradable cloth webbing. Do not use wire for staking any plant.

Evergreen trees taller than 4 ft and deciduous trees taller than 6 ft, if less than 3 in. in caliper, shall be supported with two stakes on opposite sides and driven into the ground at least 2 ft. The stake shall not be higher than 75% the height of the tree. Any excess burlap shall be cut away and disposed of as directed.

Trees greater than 3 in. in caliper shall be securely guyed by biodegradable fabric webbing, protective material and anchors. Three anchors shall be equally spaced around the tree. Webbing

shall be fastened around the tree trunk immediately above a substantial limb located one-half to two-thirds of the tree height above the ground and anchored at a distance from the trunk equal to two-thirds of the height of attachment to the tree. The anchor shall be a hardwood stake. The anchor stake shall be firmly driven at an angle and to a depth of at least 2 ft and the excess length of stake shall be cut off 3 in. above the ground.

Webbing shall be placed around the tree trunk and secured to the anchor stake.

Staking and guying shall be incidental to tree installation. Use cloth webbing rather than wire. Do not use hose.

All Flowering Cherries and Flowering Crabs shall be protected to a height of 12 to 18 in. above the ground from animals and rodents by a protective cage. The cage shall be of wire or plastic mesh or other approved material and shall not make any direct contact with the tree. Otherwise, do not wrap trees except for transport. Remove transport wrapping after installation of plant material.

771.67: Mulching

No mulch shall be applied prior to the first watering of the plant. Trees and shrubs shall be mulched no later than one week after planting.

Mulch material shall be furnished and placed over all pit or saucer areas of individual trees and shrubs and over the entire area of shrub beds to the depth indicated on the plans. Pull mulch away from stem flare.

In areas to be planted with roses, vines, or ground cover, the entire area shall be mulched before planting. The mulch shall be parted at the location of each hole and carefully replaced around the plant immediately after planting.

Preparation for mulch areas of mass planting shall conform to the provisions of 767.60: Preparation for Mulching.

Mulch material shall be material as indicated on the plans or approved by the Engineer.

The Contractor shall, at their own expense, replace any plant material that has been damaged by too much or too little mulch, as determined by the Engineer.

771.68: Pruning

Pruning of all plants shall be done only by a Massachusetts Certified Arborist or Horticulturist, as follows: Initially, all broken or dead or injured branches shall be cut flush with the trunk or limb, and broken roots shall be pruned on the plant side of the break. If damage is significant, then plant will be replaced per direction of Engineer.

Pruning shall not deform or otherwise destroy the typical shape or symmetry of the tree or shrub and shall not reduce the height or overall size by more than one-third. The leader of the tree shall not be cut back.

771.70: Care and Maintenance During Maintenance and Establishment Periods

The Contractor will be held responsible for all planted material, providing plant care for the duration of the Maintenance and Establishment periods described below, until the project is

completed and accepted. At the completion of the Establishment period, all plants shall be in a healthy, growing condition and free from weeds or other noxious materials or conditions. Care shall include watering, weeding, cultivating, pruning, re-mulching, trimming, adjusting of guys, removal of dead material, resetting plants to proper grades or upright position, and maintaining the planting saucer, and by performing other operations as required to keep plants healthy and growing.

Pruning shall be in accordance with the ANSI standards for Class I, fine pruning, to preserve the natural character of the plant. All dead wood or suckers and all broken or badly bruised branches shall be removed. Do not cut leaders. The Engineer shall determine if plants require pruning or should be rejected. All pruning work shall be done by a Massachusetts Certified Arborist. Contractor will submit a copy of the Arborist's current certification to the Engineer.

The Contractor will be responsible for weeding around planted materials. All weeding shall be completed before acceptance of the project. At no time shall weeds attain the height of 6 in. during the period of contract prior to acceptance. Newly planted material must be clearly visible in order to be approved for Conditional and Final Acceptance.

771.71: Watering

All plants shall be watered during planting and all plants shall be watered at least twice each week during weeks where the average daily temperature exceeds 55°F and when precipitation is less than 1 in., as determined by local National Weather Service data. Watering shall be sufficient to provide moist soil to a depth of 6 in., as determined by the Engineer. If soil is sufficiently moist, as determined by the Engineer, the required watering may be reduced.

Trees will require a minimum of 10 gallons of water each, and shrubs a minimum of 5 gallons per plant per watering. Watering may be achieved using individual drip irrigation bags.

Trees or shrubs planted after October 15 shall be thoroughly watered at the time of planting, after which subsequent watering will not be required until following season.

The Contractor shall maintain a watering log for all plants installed on the project, indicating dates of watering and weather events. Log shall be submitted for final payment.

771.72: Maintenance Period

The Maintenance Period shall begin immediately after all plants are planted and shall continue for a minimum of 60 days following the completion of all planting installations, or until the conditional acceptance of all planting work, whichever is a longer period of time. During the 60-day Maintenance Period, plants shall be inspected for watering, weeding, and other requirements at least twice each week.

Any decline in the condition of new plantings shall require the Contractor to take immediate action to identify potential problems and undertake corrective measures. If required, the Contractor shall immediately notify the Engineer and engage professional arborists and/or horticulturists to inspect plant materials and to identify problems and recommend corrective procedures. Inspection and recommendation reports shall be submitted to the Engineer.

At the end of the Maintenance Period, the Contractor will request inspection by the Engineer at least 10 days before the anticipated date of inspection.

At the time of inspection, if the plant materials, workmanship, and maintenance practices are acceptable to the Engineer, the date of the inspection shall establish the end of the Maintenance Period and the commencement of the required one-year Establishment Period for planting work.

If, in the Engineer's opinion, plant materials, workmanship, or maintenance is deficient, acceptance will not be granted, and the Maintenance Period for all the plants shall be extended until plant replacements are made or other deficiencies are corrected. All dead, declining, or unsatisfactorily maintained plants shall be removed promptly from the project. Replacement plants shall conform in all respects to the Specifications for the original plants and shall be planted in the same manner.

Absolutely no debris may be left on the site. The Contractor shall repair any damage to site as directed by the Engineer, at no additional cost.

771.73: Establishment Period

The purpose of the Establishment Period is to nurture plants through at least one full growing season and one full winter. Planted areas shall be free of weeds and debris, and plantings shall be re-mulched as necessary.

The Contractor is responsible for arranging inspection early enough in the season to allow adequate time to procure and install replacement material. The Engineer will inspect the replacement planting work upon the request of the Contractor. Request for inspection, shall be received by the Engineer at least ten days before the anticipated date of inspection.

At the end of the Establishment Period, each plant shall show healthy growth on at least 75% of its terminal stems, as determined by the Engineer. Determination of healthy growth shall include, but is not necessarily limited to, viable leaves (in season) and terminal buds, as well as live cambium. Plants found to be unacceptable shall be removed promptly from the site and replaced immediately or during the next normal planting season, as permitted by the specifications.

Stakes and guying shall be removed from all plants before Final Acceptance, and materials will be disposed of offsite at no extra cost to the Contract.

771.74: Replacement of Defective Plant Material

Any dead and unsatisfactory plants shall be replaced in kind and size with plants as originally specified, or on approval by the Engineer in writing, by alternate or substitute varieties of plant material of equal value. Replacement plantings of evergreens shall be in place by October 15 and of deciduous by November 1. Replacement plantings shall conform to the provisions of this section, except the requirements for establishment.

A final inspection of all plant material for acceptance will be held after the replacement planting has been completed.

COMPENSATION

771.80: Method of Measurement

The quantity of plants to be paid for will be the number of living trees, shrubs, vines and ground cover plants of specified kinds and sizes furnished, planted and accepted in accordance with these specifications.

Mulch for planting beds and tree pits shall be incidental to the cost of the plants. Mulch used on areas other than over tree pits or planting beds will be measured by area and at the specified depth. The mulch taken from this measured volume and used for mulching trees and shrubs will be deducted on the basis of the volume of mulch placed over the rated size of each planting pit at a depth of 3 in.

771.81: Basis of Payment

The quantity of trees, shrubs, vines and ground cover plants measured as provided above will be paid for at the contract unit prices per each for planting of the types, species and sizes called for in the bid schedule. The unit price per planting item shall include furnishing and delivering all plants, furnishing and delivering prepared backfill soil, mulch, fertilizer, excavation for plant pits, planting, pruning, guying and staking, mulching, weeding, watering, cleanup, plant establishment work and care including replacements, and for all labor, equipment, tools and incidentals necessary to complete the work prescribed in this section, except that mulch for vines and ground cover plants will be paid for under the contract unit price for the mulch specified. Mulch for areas other than specified for trees and shrubs will be paid for at the contract unit price per cubic yard in place, under the item for Aged Pine Bark Mulch.

No payment will be made for mulching specified as required and included in payment for other contract items.

771.82: Payment Items

772-774	Evergreen Trees	Each
775-784	Deciduous Trees	Each
785-787	Evergreen Shrubs	Each
788-795	Deciduous Shrubs	Each
796.	Vines and Groundcover	Each
767.6	Aged Pine Bark Mulch	Cubic Yard

SECTION 800: TRAFFIC CONTROL DEVICES

SUBSECTION 801: CONDUIT, MANHOLES, HANDHOLES, PULL BOXES AND FOUNDATIONS

DESCRIPTION

801.20: General

The work under this section shall consist of furnishing and installing and/or constructing the following in accordance with the requirements of the specifications, as directed on the plans and as directed by the Engineer.

A. Conduits or ducts, intended for use as raceways for the installation of wires and cables, shall be 3-in. nominal size.
   1. Type NM: Rigid Non-Metallic (Bituminous Fiber, Fire Clay Cement, or Plastic) shall be used for all underground runs. When Type NM Electrical Conduit is specified either of the Types NM Electrical Conduit listed under M5.07.0: Electrical Conduit-Rigid Nonmetallic (Type NM) may be used in the work, at the option of the Contractor, but only one type shall be used throughout any one contract.
   2. Type RM: Rigid Metallic (Steel, Steel Plastic Coated, Special Alloys or Aluminum) shall be used for all above ground runs and where augured or jacked conduit is required. When specified for underground use or to be encased in concrete, conduit shall be plastic coated or manufactured from metal inherently resistant to corrosion.
   3. Type FM: Flexible Metallic (Steel or Steel Plastic Coated) shall be used where flexibility and special applications are required.
B. Junction Boxes or Pull Boxes shall be of such dimension as shown on the Standard Drawings. Other designs shall not be used. Pull Boxes shall be installed in all conduit or duct runs over 150 ft in length, where there is an abrupt change in direction, grade or elevation, to provide a direct one conduit entrance for wire and cable into signal, mast arm or strain pole foundations, and as directed by the Engineer.
C. Electric Manholes as shown on the Standard Drawings, plans, and/or as directed by the Engineer.
D. Foundations for light standards, lighting load centers, standard signal posts, pedestal signal posts, mast arms, strain poles and control cabinets.

MATERIALS

801.40: General

Materials shall meet the requirements specified in the following Subsections of Division III, Materials:

Cement and Cement Concrete Materials M4
Pipe, Culvert Sections, Conduit and Fittings, Pull and Junction Boxes M5
Paint and Protective Coatings M7
Metal, Related Materials, Cast Iron Frames and Covers M8
Gravel ..... M1.03.0, Type c

Metallic pull and junction boxes may be cast iron, welded sheet steel or cast aluminum, with gasketed covers securely fastened with monel or stainless steel screws that will, with cover in place, be watertight. Cast iron or sheet steel boxes shall be hot dipped galvanized conforming to the applicable portions of ASTM A153.

CONSTRUCTION METHODS

801.60: Conduit

A. Excavating Trench.

The conduit shall not be placed until after the gravel subbase for the roadway has been constructed and the rolling thereof has been completed.

The trench for a single conduit line shall be excavated to a width of 18 in. to a depth not less than 36 in. below the proposed grade of the finished pavement as shown on the plans. Whenever 2 or more conduit lines are to be laid in the same trench, the trench shall be excavated to the width shown on the plans or as specified in the Special Provisions. If the condition of the bottom of the excavated trench is wet, clayey or spongy, or otherwise unsatisfactory, the Engineer may require that the bottom of the trench be excavated deeper and the space filled with clean gravel to form a firm bearing for the conduit. The gravel shall be firmly compacted in layers not over 6 in. in depth. The grade of the finished trench shall be parallel to the proposed pitch of the traffic conduit or duct.

Existing pavements shall be sawcut in accordance with the requirements of Subsection 482: Sawcutting as shown on the plans and as required by the Engineer.

B. Preparation of Bed.

After the trench has been excavated to the proper width and depth as specified above, a gravel foundation 6 in. in depth shall be constructed on the bottom of the trench to provide a proper cushion for the conduit. This cushion of gravel shall be thoroughly tamped.

C. Laying Conduits.

All conduit lines shall be direct from one end to the other, no bends being allowed except when entering a pull box or signal base. Whenever 2 or more conduit lines are to be laid in the same trench, the conduits shall be separated from each other by a minimum distance of 3 in.

D. Joints.

All joints shall be made in accordance with conduit or duct manufacturer's recommendations, NEMA, UL and the MEC.

E. End Markers.

Dead ends of conduit lines shall be plugged with wooden, plastic or fibre stoppers. To mark the ends, sections of 2-in. by 4-in. studs, long enough so as to project above the surface of the ground after the trench has been backfilled, shall be set vertically before the backfill is placed. For single conduit lines, the stud shall be butted directly against the stopper in the end of the conduit. Where 2 or more conduit lines converge to a common point, each line shall be ended 2 ft from the common point of intersection and a stud set up at this point. Backfill shall not be placed until the Engineer has established the necessary ties to the studs.

F. Concrete Envelope.

All Type NM Conduits or ducts marked "X" on the plans shall be encased in a concrete envelope as shown on the Standard Drawings.

G. Filling Trench.

Gravel fill shall be made around the sides of the conduit and over it for a depth of 3 in. and thoroughly tamped. A plank of spruce, fir, hemlock or other satisfactory wood, about 6 in. wide and 2 in. thick, (nominal dimensions) shall be placed over this gravel and the filling of the trench with suitable materials in layers of not over 6 inches, compacted thoroughly, shall be completed. If Extra Heavy Wall (Schedule 80) Conduit is selected as an option for Rigid Non-Metallic Conduit, an approved underground warning tape may be substituted for the 2-in. by 6-in. plank.

H. Testing Installation.

After the trench is backfilled, the Contractor shall, in the presence of the Engineer, test the installation by pushing or pulling through the entire length of the conduit line a rod, rope or fish tape on the end of which is attached a brush and ball with a diameter not smaller than ¼ in. less than the inside diameter of the conduit. All obstructions, including stones, dirt, concrete, etc., shall be removed, and damaged conduits shall be replaced at the expense of the Contractor.

I. Conduit and Duct Crossing Paved Roadways.

When a trench has been cut across a paved surface, the trench shall be bridged with a 6-in. concrete slab as shown on the Standard Drawings.

When jacking or drilling methods are specified for placing conduits under existing pavements, pavement shall not be disturbed without the approval of the Engineer. In the event obstructions are encountered, upon approval of the Engineer, small test holes may be cut in the pavement to locate the obstructions. Jacking or drilling pits shall be kept 3 ft clear of the edge of any type pavement wherever possible.

J. Conduit on Structures.

Conduit system on structures shall consist of furnishing and installing all material and equipment and performing all work necessary for a complete conduit system. The type of conduit shall be as

designated on the plans conforming to the requirements of M5.07.1: Electrical Conduit-Rigid Metallic (Type RM). All conduit bends shall be made in a neat and workmanlike manner. crushed or deformed conduit shall not be used. Conduit ends shall be reamed to remove all burrs, and all chips resulting from reaming removed from the conduit before installation. The ends of all conduit runs shall be protected by grounding bushings and be capped if wire and cable is not to be installed immediately. Conduit shall be held rigidly in place to prevent misalignment during placing of concrete. Reinforcing bars shall not be cut, bent, displaced or otherwise altered from that shown on the design plans. One manufactured expansion fitting (made of material compatible with the conduit) shall be used for each conduit run on structures at every expansion joint of the structure, unless flexible metallic conduit loops or bends are stipulated. Clamps or hangers shall be provided at intervals not exceeding 5 ft.

Conduit runs shall be made with the minimum practicable number of bends. The total of the angles of bends between junction or pull boxes shall not exceed 270°. So far as practicable, all bends shall be formed by the use of factory standard radius elbows. For metal conduit, where special angles of bends or offset bends are required. they may be formed to a radius of not less than 6 times the nominal inside diameter. provided the bend is made on a pipe bending machine. Field bends may be made by the use of a conduit bender forming curves the minimum radius of any portion of which shall not be less than 12 times the nominal inside diameter. Short radius bends shall be accomplished by the use of junction boxes or special condulets. Hot bends or other methods of bending which will destroy the protective coating on the metal conduit will not be permitted.

Conduit in which the cross-sectional area has been reduced or which contains sharp kinks will be rejected. Conduit shall be continuous from outlet to outlet: however. the runs may be interrupted by condulets placed for the purpose of pulling conductors or making short radius bends. All metal conduit shall be cut square the ends internally reamed and threaded the proper length and assembled at all fittings in proper manner so that all joints will be mechanically secure, water tight, and provide electrical continuity. All threaded connections shall be given a coat of pipe joint compound before fitting up.

The ends of field cut joints on non-metallic conduit, except plastic, shall be tapered to conform to factory ends. The sections shall be joined at couplings and fittings by tapping the ends of sections sufficiently to provide water tight joints without over stressing or cracking the fittings. Where non-metallic conduit is joined to metallic conduit. special tapered and threaded non-metallic adaptors shall be used. When fitting-up compound is specified for non-metallic conduit the compound shall be of a type which will remain plastic during assembly and set within a reasonable period thereafter. The compound shall be carefully painted on joints so that excess compound will not intrude on the inner surface of the conduit after assembly.

All junction boxes shall be of sufficient size to provide for proper splicing and packing of all conductors, plus additional space for a future increase of 50% in the number of conductors or conductor size.

All unused openings in boxes and fitting shall be closed by tight metal plates or plugs and all dead ends of conduit, except where provided for drainage, shall be fitted with pipe caps.

All terminal ends of conduit not ending in boxes or condulets shall be fitted with rubber bused caps containing the required number and size of holes to tightly fit the conductors running through, or fitted with, standard water tight terminal fittings or pot-heads.

Where an obstruction may have developed in any conduit run it shall be removed, if practicable. If the obstruction is not removed the affected portion of the conduit system shall be removed and replaced with new, clean conduit or, if this cannot be accomplished, an entire new conduit shall be placed around the affected section at a location selected by the Engineer.

All conduit encased in concrete shall be rigidly held in proper position during concrete placement. Non-metallic conduit shall be secured against separation at the joints during concrete placement by being tied to a separate steel rod at least ½ in. in diameter running the full length of the conduit. Such rod and ties shall be considered as parts of the electrical installation.

Provisions for adequate drainage shall be made in all conduit systems. Horizontal runs shall be slightly pitched and unless completely sealed against moisture. All low points shall be drained.

Conduit shall be adequately supported by sleeves, fixed boxes, hangers, clamps or anchorages placed at intervals not exceeding 5 ft. Anchor bolts which are indicated on the plans as set in concrete shall be placed in the proper location before placing concrete.

Condulets, pull boxes, junction boxes and caps shall be of galvanized cast or malleable iron, of the threaded connection type with cast waterproof covers fined with moisture proof gaskets. The covers of junction boxes which house transformers or cutouts shall be attached to the box by hinges or chains.

Conduit or raceway sleeves shall be placed during construction of the portions of the structures in which they are located. They shall be maintained in a clean condition and protected from damage or obstruction by placing removable plugs or caps until ready for use.

In general, exposed conduit shall not be placed until all adjacent construction work has been completed. Portions of conduit to be encased in masonry, or boxed in between structural members, shall be placed in advance of placing concrete or during assembly of structural members and protected from damage and plugging by use of covers or tight fining metal caps.

801.61: Electric Manholes, Handholes, Pull Boxes and Junction Boxes

A. General.

Electric manholes, handholes, pull and junction boxes shall be built to the lines, grades, dimensions and designs shown on the plans or Standard Drawings with the necessary frames, covers, etc., in accordance with the applicable provisions of Subsection 201: Basins, Manholes and Inlets.

B. Cast in Place Concrete Units.

After excavation, all loose material shall be removed before the forms are installed. All conduits, ground rods, pulling irons and reinforcing steel shall be installed rigidly in place before the concrete is placed. After the concrete for the manhole, handhole or pull box is placed, and forms removed, all exposed portions of the concrete shall be neatly finished. Frame castings shall be set according to the requirements of 201.63: Placing Castings.

C. Pre-Cast Concrete Units.

The construction methods for pre-cast concrete units shall conform to the relevant provisions of Subsection 901: Cement Concrete, M4.02.14: Precast Units, and the above 801.61: Electric Manholes, Handholes, Pull Boxes and Junction Boxes, Paragraph B.

D. Metallic Units.

Metallic pull and junction boxes shall be installed at the approximate locations shown on the plans, or in long conduit runs, they shall not be spaced over 150 ft from each other. It shall be in the option of the Contractor, at their expense, to install additional pull or junction boxes that they may desire to facilitate their work.

Pull or junction boxes installed shall not be of dissimilar metal to the metal conduit used in any one electrical system.

801.62: Foundations

Light standard, Iighting load center, signal post, strain pole, signal mast arm and signal control cabinet foundations, shall be constructed with the necessary anchor bolts (supplied under the items listed in Subsection 815: Traffic Control Signals, Subsection 820: Highway Lighting and Subsection 824: Flashing Beacons, Illuminated Warning Signs, and Lighted Barrier Arrows), reinforcing rods, conduit elbows or sweeps, etc., as shown on the Standard Drawings, and in accordance with the applicable requirements of Subsection 901: Cement Concrete.

For core type foundation estimating and bidding purposes, in the absence of boring samples, or the actual determination of the soil properties at the proposed footing location, the Department will accept an assumed soil bearing pressure of 2 ksf for the design of the footing using the Span Wire Assembly Design Chart III of the Departments Standard Drawings. The moments shall be calculated from the data obtained from the relevant traffic control signal plan.

However, the augered foundations shall not be constructed prior to soil classification of the subsurface soil by a qualified firm or person to perform the soil classification, analysis, and footing design.

The actual existing soil conditions shall be determined from boring samples (see Subsection 190: Borings). If the results of the auger boring show that the soil classification requires the use of a Foundation Design Chart that requires a greater depth the foundation shall be constructed according to the requirements of the appropriate chart and payment will be made for the difference in depth under Item 815.98.

Inversely, if it is determined the soil classification permits the use of a Foundation Design Chart that requires a lesser depth, the Department shall be credited for the difference in depth under Item 815.98.

All unsuitable material within the limits of the footing must be removed at the direction of the Engineer (Peat organic material, material that has been dumped. etc.).

The concrete for the footing shall be placed immediately after excavation to prevent water from collecting in the excavated area.

COMPENSATION

801.80: Method of Measurement

When separate items are listed in the Proposal for various types of Electrical Conduits each type will be measured according to the following:

Pay items for single conduits will be measured by the foot between end terminals along the center line of the conduit as actually installed, complete in place and accepted.

Pay items for multiple conduits will be measured by the foot between end terminals along the center line of the conduit bank as actually installed, complete in place and accepted.

Electric manholes, handholes, pull and junction boxes, and signal and lighting foundations shall be measured for payment as a unit.

Allowance for rock, if not already paid for under previous rock excavation, shall be based on the width of rock encountered in the trench but not to exceed the width specified in 801.60: Conduit. Structure excavation shall be measured in accordance with Subsection 201: Basins, Manholes and Inlets.

The measured quantity (including a 6-in. depth allowance) will be paid for under the item for Class B Rock Excavation.

Gravel will be measured by the cubic yard as specified in 150.80: Method of Measurement.

Cement Concrete will be measured by the cubic yard as specified in 901.80: Method of Measurement.

801.81: Basis of Payment

The unit contract price per foot, shall be full compensation for furnishing and installing all conduits, couplings, expansion fittings, elbows, bends, caps, sleeves, clamps, hangers, reducers, tees, jointing compound, sealing compound, cement concrete required in 801.60: Conduit, Paragraphs F and I, planking required in 801.60: Conduit, Paragraph G, and gravel required in 801.60: Conduit, Paragraph B; for placing the electrical conduit in accordance with these specifications, including all excavation (except Class B Rock) or jacking required, backfilling of the trenches, chipping or sawing of pavement, bedding or hanging of conduit and all other work incidental to the construction of the conduit system, except that when electrical conduit is included on any project as an integral part of a traffic control signal or Highway Lighting System and the conduit is not shown as a pay item, it shall be considered as incidental to the construction and be included in the lump sum price for such systems.

The accepted quantities of signal and lighting foundations (including anchor bolts) will be paid for at the contract unit price each.

Anchor bolts will be paid for under the items listed in 815.82: Payment Items and 824.82: Payment Items.

The accepted quantities (including cost of castings) of electric manholes, handholes and pull and junction boxes will be paid for at the contract unit price each, complete in place.

Any incidental work or materials for which no basis of payment is provided will be considered as completely covered by the unit price bid.

Class B Rock Excavation will be paid for under Item 144. The contract unit price shall be considered full compensation for the satisfactory disposal of the Class B Rock excavated material.

Borings will be paid for in accordance with 190.81: Basis of Payment.

801.82: Payment Items

801.2-801.66	___ inch Electrical Conduit Type NM (#)	Foot
	(# = double, 4 bank, or 6 bank)	
804.05-804.6	___ inch Electrical Conduit Type NM – Plastic (UL)	Foot
806.05-806.6	___ inch Electrical Conduit Type RM – Galvanized Steel	Foot
808.2-808.6	___ inch Electrical Conduit Type RM – Plastic Coated Steel	Foot
809.05-809.4	___ inch Electrical Conduit Type FM	Foot
810.	Conduit Encased in Concrete – SD4.041	Foot
811.10-811.14	Electric Manhole – SD2.0___*	Each
	(*SD2.010 to SD2.014)	
811.20-811.24	Electric Handhole – SD2.0___*	Each
	(*SD2.020 to SD2.024)	
811.30	Pull Box 8 x 23 Inches SD2.030	Each
811.31	Pull Box 12 x 12 Inches SD2.031	Each
811.35	Pull Box Adjusted	Each
811.36	Electric Manhole Adjusted	Each
811.37	Electric Handhole Adjusted	Each
811.40-811.99	Junction Box ___ x ___ x ___ inches	Each
812.10-812.15	Light Standard Foundation SD3.01___*	Each
	(*SD3.010 to SD3.015)	
812.20	Lighting Load Center Foundation	Each
812.30	Standard Signal Post Foundation SD3.030	Each
812.31	Pedestal Signal Post Foundation SD3.031	Each
812.40	Signal Mast Arm Foundation	Each
812.50	Signal Control Cabinet Foundation SD3.050	Each
815.98	Footing Cost Adjustment	Foot

SUBSECTION 813: WIRING, GROUNDING AND SERVICE CONNECTIONS

DESCRIPTION

813.20: General

This work shall consist of furnishing and installing wire and cable of the type and size indicated for traffic signals and other traffic control devices, ITS systems, highway lighting and related electrical systems, equipment grounding systems, new ground electrodes or connections to existing ground electrodes and all materials and equipment necessary to deliver power to such systems.

Service points shown on the plans are approximate only. The Contractor shall determine exact locations for both overhead and underground service access points. The Contractor shall determine riser elevations or connections/routing to manhole facilities from the serving utility, arrange to complete the service connections.

MATERIALS

813.40: General

Wire and cable types and uses shall conform to M8.16.0 and Table 813.40-1.

Table 813.40-1: Wire & Cable Types and Uses

Type	Material Specification	Use
1	M8.16.1	All traffic control signal circuits above ground supported by a messenger wire, in a duct, or other electrical wire and cable raceway and shall be installed only when the air temperature is above 35°F.
2	M8.16.2	Same as Type 1 except may be installed at any air temperature above 20°F.
3	M8.16.3	All traffic control circuits installed above ground supported by integral messenger.
4	M8.16.4	Same as Type 3 and when an electrical continuous metallic shield is required.
5	M8.16.5	All traffic signal circuits for direct earth burial or severe service conditions.
7	M8.16.7	All power and lighting distribution systems in duct or other electrical wire and cable raceways.
8	M8.16.8	Same as Type 7 and includes direct earth burial, services and roadway wire loops (USE XLP only).
9	M8.16.9	Special purpose when specified.
10	M8.16.10	Grounding and bonding traffic control and highway lighting systems.
11	M8.16.11	Shielded detector lead-in cable for wire loop detectors.
12	M8.16.12	Multi-conductor heavy duty portable power cord for traffic control signal mast arm and high mast tower lighting.
13	M8.16.13	Loop detector wire with tube.
14	M8.16.14	Coaxial cable for vehicle detection camera applications.
15	M8.16.15	Cat5e ethernet cable for IP enabled devices such applications as vehicle detection and wireless communications equipment.
16	M8.16.16	Twisted pair copper for broadband communication over power lines and FSK communication devices.
17	M8.16.17	Twisted pair copper and fiberoptic hybrid cable for specialty systems.

813.41: Grounding and Bonding Conductors

Grounding and bonding conductors shall conform to M8.16.10.

813.42: Ground Rods

Ground rods shall consist of driven rod(s) conforming to M8.17.0 or other devices approved for the purpose.

813.43: Service Connections

All equipment furnished shall be new and shall meet the current requirements of NEMA, UL and the MEC.

CONSTRUCTION METHODS

813.60: Wire and Cable

A. Steel Messenger Cable Fittings.

Messenger cable (integral with Types 3 & 4 Traffic Signal Cable) shall be secured to strain poles by means of pole bands. Pole bands shall be installed as detailed in the Drawings. Strain insulators shall be installed as shown on the plans. Attachments to utility owned poles shall be according to the local utility company requirements and under the supervision of the local utility company. The Contractor shall furnish and install back guys, head guys, anchors, etc. that may be requested by the local utility company, where guys are necessary due to the placement of traffic signal equipment on utility poles.

Traffic signal cable shall be attached to messenger cables by spinning the cable to the messenger with an approved lashing material (0.045 stainless steel or Kevlar-Aramid fiber core with nylon jacket) or when approved in writing by steel cable rings approved for the purpose.

B. Installation of Copper Wire and Cable.

Installation of wire and cable shall not begin until the conduit system has been tested in accordance with the requirements of 801.60: Conduit, Paragraph H.

All conductors, including grounding and bonding conductors, shall be drawn by hand into ducts or conduits without damage to the covering, sheath, insulation or to the wires themself. The installation of the wiring shall not be done until all work which may damage the wires has been completed. During the pulling process, all wires shall be drawn freely into conduits without kinks or bends, twisting or lapping. In general, all cables in each conduit run shall be pulled at the same time, fed from free running reels. Powdered soapstone, talcum or other approved lubricant may be used to assist in placing wire and cable in conduits.

A minimum of 24 in. of slack cable shall be left in all manholes, pull and junction boxes, mast arm pole bases, signal post bases, light pole bases, and cabinet enclosures.

C. Splicing.

Splices shall be made only in manholes, control cabinets, junction boxes, or signal and lighting bases.

Pull boxes shall not be used for splicing, except in pull boxes where vehicle detectors are used. Splicing shall be performed using connectors and methods approved by the Department. Splicing is only permitted in the pull box nearest the detector (see 813.60: Wire and Cable, Paragraph B). Detector leads shall not run in the same cable sheath or jacket in cable carrying signal currents.

Splicing of electrical service wires is not allowed.

The conductors shall be joined by the use of connectors and terminal lugs, listed by Underwriters Laboratory, and meet all requirements of the Massachusetts Electrical Code.

Splices shall be insulated and use the proper material suited for the environment and application. The Contractor may use any of the following:

1. A filler compound or moisture-resistant self-fusing tape, applied to a thickness equal to, and well lapped over, the original conductor insulation, followed by two layers of electrical insulating tape.
   The dielectric strength of splices shall be at least equal to that of the cable insulation.
2. A UL approved electrical spring connector ("wire-nut") with an approved sealing compound for protection from dampness and water.
3. An approved re-enterable rigid body splice kit with a non-hardening sealing compound compatible with the wire insulation.
4. An approved heat-shrinking cable sleeve or tape, designed to provide electrical insulation and protect overhead and underground splices from moisture penetration, corrosion and electrical breakdown.

After wiring and splicing is completed, all conduit runs shall be plugged at all manholes, handholes, pull boxes, junction boxes, cabinets and foundations to form a complete closed conduit or duct system to prevent air circulation.

Sealing compound (including foam), approved by the Department, shall be used in liberal amounts, carefully forced into the ends of the conduits and tightly packed around all wire and cables completely sealing the opening.

D. Highway Lighting Circuit Identification.

The Contractor shall furnish and install colored tapes and identification tags on all lighting conductors at the points where they connect to equipment and on cables in all pull and junction boxes and pole shafts. The colored tapes shall cover a 6-in. portion of the conductor at these points and shall be identified as follows:

- Line 1 – Black
- Line 2 – Red
- Line 3 – Blue
- Neutral – White
- Ground – Green

For 120 VAC, single-phase load centers, the colored tapes shall be identified as follows:

- Line – Black
- Neutral – White
- Photocell Bypass – Red
- Ground – Green

For 480/277 VAC, 3-phase 4-wire systems, the colored tapes shall be identified as follows:

- Phase A – Brown
- Phase B – Orange
- Phase C – Yellow
- Neutral – White
- Ground – Green

Identification tags shall be nylon or other suitable non-metallic material, not less than ¾ in. in diameter, and not less than $^{1}/_{32}$ in. thick. Identification markings shall be stamped on the tags by means of small tool dies. Each tag shall be securely tied to the proper conductor by nylon or other suitable non-metallic cord (plastic or nylon).

E. Traffic Control Signal Circuit Identification.

The Contractor shall wire and splice traffic control signal circuits to conform to the color identification code found in Table 813.60-1.

Table 813.60-1: Traffic Control Signal Wire Identification Code

5/C Cable	Vehicle or Bicycle Phases	Overlaps	Pedestrian Phases
1. Black	Spare	Spare	Push Button Switch
2. White	Phase 1 through 8 – C	Overlap – C	Walk/Don't Walk – C
3. Red	Phase 1 through 8 – R	Overlap – R	Don't Walk – R
4. Green	Phase 1 through 8 – G	Overlap – G	Walk – G
5. Orange	Phase 1 through 8 – Y	Overlap – Y	Push Button Switch
6. Blue	Spare		
7. White/Black	Phase 2 – C		
8. Red/Black	Phase 2 – R		
9. Green/Black	Phase 2 – G		
10. Orange/Black	Phase 2 – Y		
11. Blue/Black	Spare		
12. Black/White	Phase 3 – C		
13. Red/White	Phase 3 – R		
14. Green/White	Phase 3 – G		
15. Blue/White	Phase 3 – Y		
16. Black/Red	Phase 4 – R		
17. White/Red	Phase 4 – C		
18. Orange/Red	Phase 4 – Y		
19. Blue/Red	Phase 4 – G		
20. Red/Green	Spare		

The number of conductors required for each traffic control signal system shall be as follows:

All systems shall have a minimum of one 5-conductor cable for each of the following controller outputs to field wiring required by the timing and sequence plan for the system:

- Vehicle Phases
- Overlap Phases
- Pedestrian Phases

Approval may be given, when requested in writing by the Contractor, for alternate use of one 20-conductor cable in lieu of four of the above 5-conductor cable.

The Contractor shall furnish and install colored tapes and identification tags on all cables in the cabinet and at the points they connect to equipment in all signal bases, in all pole shafts, and in all pull and junction boxes.

The tapes shall cover a 6-in. portion of the cables at the above locations with the following colors:

- Black for Ring 1
- Red for Ring 2
- Brown for Detectors
- Orange for Overlaps
- Yellow for Pedestrian Phases

The tags shall be nylon or other suitable non-metallic material. not less than ¾ in. in diameter and not less than $^{1}/_{32}$ in. thick. Identification markings shall be as follows:

- Vehicle Phase Numbers Ring 1
- Vehicle Phase Numbers Ring 2
- Detector Phase Numbers
- Overlap Phase Numbers and Letters

F. Pedestrian Phase Numbers

The identification markings shall be stamped on the tags by means of small tool dies. Each tag shall be securely tied to the proper cable by nylon or other suitable non-metallic ties.

813.61: Equipment Grounding and Bonding

With each cable run an equipment grounding/bonding conductor shall be installed to which all equipment shall be electrically bonded in accordance with standard practice and the Code.

Metallic cable sheaths, metal conduit, non-metallic conduit grounding conductors, ballast and transformer cases, metal poles and pedestals, metal junction and pull boxes, and metal cabinets shall be made mechanically and electrically secure to form a continuous bonded system and shall be properly bonded and grounded in accordance to standard practice and the MEC.

Bonding of traffic signal standards, pedestals. strain poles and mast arms shall be accomplished by installing a $^{3}/_{16}$ in. or larger brass bolt in the lower portion of the shaft.

For bonding purposes in all non-metallic type conduit, the grounding/bonding conductor shall be run continuously. Where non-metallic conduit is to be installed for future use, the above-mentioned conductor may be omitted.

Bonding of metallic conduit systems in concrete foundations and pull boxes shall be by means of approved grounding bushings (compatible with the conduit) and bonding jumpers.

All expansion sleeves in metallic conduit runs shall be provided with a bonding jumper, as specified.

813.62: Grounding Electrodes

A. General.

A driven rod, as specified in 813.42: Ground Rods, shall be used as the grounding electrode. Driven rods should, as far as practical, be embedded below permanent moisture level. Except where rock is encountered, rods shall be driven to a depth of at least 8 ft. Where rock is encountered other devices approved for the purpose shall be used (see Article 250 - Grounding MEC).

B. Resistance Tests.

Grounding electrodes shall, where practicable, have a resistance to ground not to exceed 25 ohms. Where the resistance is not as low as 25 ohms, one additional rod shall be driven, placed at least 8 ft apart, and connected in parallel with a #6 AWG bare copper solid or stranded conductor.

The measurement shall be made with either a ground ohmer, clamp-on ground resistance tester. The Contractor shall follow all procedures specified by the manufacturer of the testing equipment.

The Contractor shall furnish the Engineer with a report of all resistivity tests, indicating the values obtained for each and combinations (parallel connected) of rods tested. This report shall become a part of the “as built” records.

813.63: Service Connections

Each service shall include a meter socket; a three-wire single phase or four-wire three phase solid neutral disconnect of size noted; the necessary conduit; conduit risers; cable and ground assembly; all installed in accordance with the MEC, serving utility, and Department requirements.

Service equipment shall include all equipment from the distribution lines of the serving utility to and including the metering equipment. Meter will be furnished and installed by serving utility.

Service disconnect shall be a standard type circuit breaker, encased in a NEMA Type 3R raintight enclosure that can be padlocked.

All traffic signal services shall be 120V or 120/240V, single phase, 60 Hz, alternating current, and all highway lighting shall be 120/240V, 240/480V, single phase, or 277/480V, three phase, 60 Hz, alternating current.

Conduit for services shall not be less than 1.25 in. and be rigid metal above ground, securely fastened every 3 ft on the service pole.

All wire and cable shall conform to M8.16.8: Type 8 Direct Burial Wire (USE). The wires between the serving utility distribution lines and service disconnect shall not be smaller than #6 AWG.

The ground electrode shall conform to the requirements of 813.62: Grounding Electrodes.

Ground clamps shall be approved by UL and acceptable to the local power company.

In the case of underground services, the Contractor shall furnish and install all equipment as required by the serving utility.

The Contractor shall make adjustments in the installation to comply with the varied requirements of the MEC and serving utility and perform all work to the satisfaction of the MEC, serving utility and the Department.

COMPENSATION

813.80: Method of Measurement

A. Wire and Cable.

All cable will be measured by the foot. the measurement being made along the center line of the conduit in which the conductor is placed. No allowance will be made for the necessary lengths of slacked cable laid around the sides of manholes, hand holes, junction boxes, pull boxes, or extending from foundations for making splices, taps in cable, and connecting the internal components of control cabinets.

B. Equipment Grounding.

Equipment grounding will be measured as a unit including all nuts, bolts, washers including lockwashers, connectors, clamps and incidental materials to form a continuous system. Equipment grounding conductor will be measured by the foot conforming to 813.80: Method of Measurement, Paragraph A.

C. Ground Electrodes.

Measurement for ground rods will be based on units 8 ft, 10 ft or longer, as specified. If in the driving of standard units, obstructions are encountered, measurement will be made for the actual length driven. The ground rod shall then be withdrawn and re-driven at a new location to meet requirements specified above.

D. Service Connections.

Service Connections of each type will be measured on the basis of the number of services installed and connected to the serving utility distribution lines with all appurtenances in acceptable operating condition.

813.81: Basis of Payment

A. Wire and Cable.

All cable will be paid for at the respective contract unit price per foot for the type and size specified, which price shall include installation and connection of wire and cable and all splices and circuit identification. All additional materials required to complete the installation shall be considered as incidental thereto and included in the contract price for wire and cable and no additional compensation will be allowed.

B. Equipment Grounding and Bonding.

The lump sum price for Equipment Grounding and Bonding shall be full compensation for work necessary or incidental to the installation of the equipment grounding/bonding, modifying existing grounds or bonds, or both, as shown on the plans. All additional materials and labor not shown on the plans or standard drawings called for herein and which are required to complete the installation shall be considered as incidental thereto and be included in the contract unit price for equipment grounding.

Equipment grounding conductor will be paid for at the contract unit price per foot as specified in 813.81: Basis of Payment, Paragraph A.

C. Ground Electrodes.

This work will be paid for at the relevant unit price which price shall include all ground clamps, #6 AWG copper conductors, excavation, backfilling, compaction, welding or brazing, all tests, reports and work incidental thereto.

Allowance will be made for ground rods not driven to minimum depths because of obstructions and will be paid for at the contract unit price per foot for ground rod.

D. Service Connections.

Service connections will be paid for at the contract unit price for each service connection complete in place.

All additional work called for herein which is required to complete the service connection shall be considered as incidental to the construction.

813.82: Payment Items

813.10 Traffic Signal Steel Messenger Cable – Type 0 ..... Foot
813.21-813.25 ..... Traffic Signal Cable – Type #___ (#1 to #5) ..... Foot
813.30-813.39 ..... Wire Type 7 No. – General Purpose (*10-4/0) ..... Foot
813.40-813.49 ..... Wire Type 8 No. – Direct Burial (*10-4/0) ..... Foot
813.50 Wire Type 9 Special Purpose (TW-THW) ..... Foot
813.51 Wire Type 9 Special Purpose (UF) ..... Foot
813.52 Wire Type 10 - #8 Grounding and Bonding ..... Foot
813.53 Wire Type 11 – Loop Detector Lead-in ..... Foot
813.54 Wire Type 12 – Heavy Duty Portable Cord ..... Foot
813.55 Wire Type 13 – Loop Detector Wire and Tube ..... Foot
813.56 Wire Type 14 – Coaxial Cable ..... Foot
813.57 Wire Type 15 – Cat5e Ethernet Cable ..... Foot
813.58 Wire Type 16 – Twisted Pair Copper Cable ..... Foot
813.59 Wire Type 17 – Twisted Pair Copper/Fiberoptic Hybrid Cable ..... Foot
813.60 Equipment Grounding and Bonding ..... Lump Sum
813.70 Ground Rod ..... Foot

813.71	Ground Rod 8 feet Long	Each
813.72	Ground Rod 10 feet Long	Each
813.80	Service Connection (Overhead)	Lump Sum
813.81	Service Connection (Underground)	Lump Sum

SUBSECTION 815: TRAFFIC CONTROL SIGNALS

DESCRIPTION

815.20: General

This work shall consist of furnishing and installing or modifying at each location, traffic control signals ready for operation.

Included in the work is the furnishing and installing or modifying existing traffic signal control equipment, signal heads, electric lamps, pedestrian push buttons, control equipment, vehicle detectors, posts and bases, poles, pedestals, mast arms, strain pole and span wire assemblies and all incidental materials (included in Subsection 801: Conduit, Manholes, Handholes, Pull Boxes and Foundations and Subsection 813: Wiring, Grounding and Service Connections) necessary for operating the traffic control signals.

This work shall also include furnishing and erecting any pertinent signs and all painting required to complete the installation. The removal, salvage, stockpiling, reinstallation or transporting of existing traffic installations will be covered under this section and appropriate pay items where applicable.

The locations of signal heads, controllers, standards and appurtenances shown on the plans are approximate and exact locations will be established by the Engineer in the field.

The responsibility for the exact and satisfactory installation of traffic signals shall rest with the Contractor and work performed, if not acceptable by the Engineer, shall be executed to the satisfaction of the Engineer by the Contractor at the Contractor's expense.

All electrical equipment shall be designed, manufactured and tested in accordance with the applicable standards of the ANSI, IMSA, ITE, NEMA, UL and these Specifications.

All work and materials shall conform to the requirements of the Massachusetts Electrical Code herein referred to as the electrical code.

Wherever reference is made to codes or standards mentioned above, the reference shall be construed to mean the code or standard that is in effect on the date of advertising of the project.

All work within the traffic control cabinet shall be done by an IMSA Certified Traffic Signal Level II Technician. The Contractor shall provide to the Engineer names and certification qualifications of all persons who will be working within the traffic control cabinet at least 10 days prior to the start of any traffic control cabinet work.

Standard symbols and construction details for traffic signal installations are shown on the current Traffic Signal and Highway Lighting Standard Drawings.

Within 30 days following execution of the Contract, the Contractor shall submit to the Engineer for approval, a list of equipment they propose to install. The submission shall include all equipment identified on the plans or in the specifications by the name of the manufacturer, model or identifying number of each item. The list shall be supplemented by catalog cuts and such other data as may be required, including wiring diagrams of any special equipment and any proposed minor deviation from the plans. All the above data shall be submitted in triplicate for checking. Following checking, correction and review, not less than 5 complete approved sets shall be resubmitted to the Engineer for distribution. The Department shall not be liable for any material purchased, labor performed, or delay to the work prior to such review and approval.

The Contractor shall provide the Department, within 10 days of receipt of approval, written proof that they have ordered the Traffic Control Signal Devices required by this Section.

Shop drawings are required for all structural support materials and fabricated items that are not specifically detailed on the plans. Shop Drawings are not required for items that are on the QTCE.

The warranties that the Contractor receives from each manufacturer of equipment and materials pertinent to the complete and satisfactory operation of traffic signal installation shall be turned over to the Department at the time of acceptance of the project, at no cost to the Department. Each warranty so furnished shall indicate its expiration date and be in effect for a minimum period of one year from the date traffic signals were placed in continuous operation.

If within one year from the date the traffic signal system is placed on continuous operation the equipment and materials do not meet the warrants specified above and the Engineer notifies the manufacturer or their authorized representative promptly, the manufacturer or their authorized representative thereupon shall correct any defect either by repairing or replacing any defective part or parts, at no cost to the Department.

The Contractor shall, at their own expense, replace any part of the traffic signal control equipment found to be defective in workmanship, material or manner of functioning within six months from the date of final acceptance of all the installations.

It is the intent of the Plans, Specifications and Special Provisions to provide a complete traffic control signal system throughout the project.

It is not intended that every fining, minor detail or feature be shown and described, as the assumption is made that either the Contractor or their Subcontractor is an expert in the particular area of responsibility and is capable of interpreting the plans, specifications and special provisions so that the bid shall include all items required and that they shall be provided and installed in a neat and workmanlike manner.

Any installation of wiring by the Contractor will be performed by licensed electricians.

815.21: Equipment

All new equipment including controllers with cabinets, vehicle detectors and detector amplifiers shall be furnished, except as noted, and installed by the Contractor.

No equipment or accessories specified in Subsection 815: Traffic Control Signals will be accepted unless type tested and approved by the Department prior to the date of the proposal.

The Department will list annually all equipment and accessories that have been type tested approved and/or approval withdrawn.

Such approval by the Department of equipment or accessories. however. shall not relieve the Contractor of any responsibility required under Section 5.00: Control of Work. All approvals will be conditional, and the Department reserves the right to withdraw its approval of equipment or accessories at any time for any of the following reasons:

a. Subsection 815: Traffic Control Signals. Delivery of equipment or accessories which do not meet requirements of Subsection 815: Traffic Control Signals.
b. Equipment or accessories with abnormal maintenance and performance records.

MATERIALS

815.40: General

The materials required are those specifically covered in the plans and in accordance with Division III of the Standard Specifications.

Any and all signs required shall conform to Subsection 828: Traffic Signs and the MUTCD.

All materials shall be new and of the latest design.

Any equipment that has been type tested and approved by the Department (815.21: Equipment) will be considered as meeting these specifications.

Where existing systems are to be modified. the existing equipment and material shall be incorporated in the revised system. salvaged or abandoned as directed by the Engineer in writing.

815.41: Controllers

See Special Provisions.

815.43: Mast Arms – Strain Poles and Span Wire Assemblies

See Special Provisions.

815.44: Posts and Bases

Standard Signal Post shall consist of a 4-in. shaft complete with an octagonal base (8 ft or 10 ft long including base).

Pedestal Signal Post shall consist of a 4-in. shaft complete with a pedestal base (8 ft or 10 ft long including base).

All posts and their bases shall be of the same material, either steel or aluminum. Aluminum signal posts shall utilize a tapered shaft.

815.45: Vehicle Signal Heads

See Special Provisions.

815.46: Pedestrian Signal Heads

See Special Provisions.

815.47: Louvered Hood and Optically Programmed Adaptors

See Special Provisions.

815.48: Traffic Signal Lamps

See Special Provisions.

CONSTRUCTION METHODS

815.60: General

Details of construction shall conform to all applicable requirements of the Standard Specifications and drawings, plans, details, Special Provisions, manufacturer's instructions and directions of the Engineer.

815.61: Painting

All painting required shall be done in conformance with applicable portions of 960.63: Painting.

Aluminum posts, pedestals, poles, standards or mast arms shall not be painted. All galvanized surfaces shall not be painted unless abraded or damaged at any time after the applications of the zinc coating. The surfaces shall then be repaired by thoroughly wire brushing the damaged areas and removing all loose and cracked coatings after which the cleaned areas shall be painted with two coats of paint, conforming to the requirements of M7.04.11.

All traffic signal, highway lighting and related electrical equipment (except new traffic signal controller cabinets) that comes from the manufacturer with one or more coats of paint (excluding primer) will be accepted, as one coat if scars or abraded places are properly cleaned and spot coated.

Two additional coats of paint shall then be applied. If such equipment is painted at the factory with just a primer coat, the Contractor shall apply three coats of paint.

Paint shall be applied to all interior surfaces before equipment and appurtenances are installed and to all exposed parts of the equipment and appurtenances after they have been completely installed, using the following colors:

Controller Cabinets (Exterior)	Aluminum
Controller Cabinets (Interior)	Aluminum or White
Signal Posts (Exterior Steel)	Yellow
Signal Posts (Interior Steel)	Aluminum or Yellow
Mast Arm and Mast Arm Pole (Exterior)	Aluminum
Mast Arm and Mast Arm Pole (Interior)	Aluminum
Housings (Back)	Yellow
Housings (Front)	Black
Visors (Outside)	Yellow or Black
Visors (Inside)	Dull Black
Backboards	Dull Black
Louvers	Dull Black
Meter Sockets	Aluminum

Painting may be omitted if equipment and materials are received from the manufacturer with equivalent paint specified above. All scars and abrasions shall be spot coated with two coats of the specified paint.

Steel poles (inner and outer surfaces) shall be painted in accordance with the applicable provisions of the Specifications.

All surfaces of aluminum bases in contact with concrete shall be coated, in the field, with a protective coating recommended by the manufacturer of the base.

815.62: Signals

A. General.

Signal posts, bases, mast arms, mast arm shafts and strain poles shall be handled in loading, unloading and erecting in such a manner that they will not be damaged. Any parts that are damaged due to the Contractor's operations shall be repaired or replaced at the Contractor's expense.

Posts, bases, mast arms and strain poles shall not be erected on concrete foundations until the concrete has set for at least three days.

Mast arms and strain poles shall be raked sufficiently to be plumb after all loads have been placed, poles shall be raked by adjusting double nuts. Shims or similar devices for plumbing or raking will not be permitted.

The bottom of the housing assembly of a signal head not mounted over a roadway shall not be less than 8 ft nor more than 15 ft above the sidewalk or, if none, above the pavement grade at the center of the roadway.

The bottom of the housing assembly of a signal head suspended over a roadway shall not be less than 16 ft nor more than 19 ft above the pavement grade at the center of the roadway.

Each signal face shall consist of one or more sections, rigidly and securely fastened together, capable of being positioned to face one direction of traffic.

Each section shall be a self-contained assembly consisting of a housing with door, visor and optical unit (lens and reflector) with traffic signal lamp.

B. Signal Head Section.

Each section shall be constructed to the requirements of ANSI specified in 815.46: Pedestrian Signal Heads including the following:

1. Optical units for 8-in. sections shall be equipped with traffic signal lamps as specified in 815.48: Traffic Signal Lamps
2. Optical units for 12-in. sections shall be equipped with traffic signal lamps as specified in 815.48: Traffic Signal Lamps.
3. Optical units for optically programmed sections shall be equipped with traffic signal lamps as specified in 815.48: Traffic Signal Lamps, equipped with dimming device to reduce lumen output of each signal lamp for night time operations.

Signal faces containing sections with both 8-in. and 12-in. lenses may be required. All signal heads including multiple assemblies shall be completely shop assembled and delivered ready for erection. Multiple units shall be assembled using 1.5-in. pipe for the supporting framework and include 1.5-in. center supporting pipe for post top mountings. Span wire and mast arm units shall have approved tie braces for the lower framework without a center support. Welding shall not be used in frame assembly.

Each socket shall be wired with two #18 AWG stranded leads not less than 16 ft long conforming to the requirements of 813.40: General for Type 5 traffic signal head wire. Type TFF or TEW.

The color of the leads from the socket behind the:

- Red lens - 1 red and 1 white wire
- Yellow lens - 1 yellow and 1 white wire
- Green lens - 1 green and 1 white wire
- Green arrow - 1 blue and 1 white wire

At the option of the manufacturer, approved connecting blocks may be installed inside the housing for these connecting wires, provided a 16-ft colored lead for each socket and 1 white common lead is furnished as an integral part of each housing.

C. Hangers and Adapters.

Hangers and adaptors shall be of bronze or malleable iron. or other approved material. strongly constructed. and of hollow design to permit the suspension of signal heads from mast arms or span wires or mounted on brackets, posts or pedestals.

Signal heads intended for post or pedestal mounting shall have suitable slip fitters for post top mounting and be secured to posts by means of set screws.

Mast arm mounted signal heads shall have an approved universal joint and safety chain.

Bracket mounted signal heads shall have suitable brackets to attach them to timber or metal poles to permit either internal or external wiring. Brackets shall be of proper size to be properly attached to pole as shown on the Standard Drawings.

Span-wire mounted signal heads shall have a span-wire hanger similar in design to that shown on the Standard Drawings. Hanger shall be specifically designed for supporting a hanging object from

steel stranded messenger cable and have "U" bolts to prevent lateral movement only. Each hanger shall be complete with a wire entrance device.

Where specified, integral terminal compartments shall be provided for any of the above types of mounting. Terminal compartments shall be fabricated of non-frangible metal and be of adequate size to accommodate a terminal block containing not less than twelve poles. each with two pressure type connectors. Each connector shall be capable of holding four #12 AWG conductors.

D. Backplates.

Where stipulated. backplates shall be furnished and installed. Backplates shall be constructed of anodized half hard aluminum sheet 0.06-in. nominal thickness and of the dimensions to fit the signal head housing used.

E. Pole Clamps.

When required for mounting signal heads or equipment. pole clamps shall conform to the general design shown on the Standard Drawings.

815.63: Controllers.

All controller cabinets. control equipment and accessories shall be factory wired ready for operation. Field work will be limited to placing cabinets and equipment and the connecting of field wiring to terminal strips. Cabinets shall be mounted on the foundation and a clear silicone sealer shall be used at the base of the cabinet to form a water-tight seal with the foundation.

In addition, the Contractor shall provide to the Engineer 2 copies of the Operating and Maintenance Instruction Manuals complete with wiring diagrams of the internal. external and field connections for each type of controller furnished on the project and listed in 815.41: Controllers two copies of the Technical Manuals and "Box Prints" for each type of controller furnished on the project and listed in 815.41: Controllers.

815.64: Detectors

The Contractor shall install the detectors at the locations as shown on the signal layout plan in accordance with the applicable requirements of the Department's Standard Drawings.

All detector lead-in cable shall be continuous without splices from the pull box nearest the detector to the controller cabinet terminals provided without passing through any signal bases.

Splices, when necessary in the pull box nearest the detector shall be soldered and made completely watertight using an approved rigid body re-enterable closure.

Detector leads shall not be run in the same cable sheath (jacket) with wires carrying signal currents.

Magnetic Detector Multi-Lane. shall be installed inside a 3-in. Type NM conduit, 18 in. below the surface of the road in a cement concrete envelope not less than 4 in. thick at any point as shown on the Standard Drawings.

Magnetic Detector Single Lane shall be installed in accordance with manufacturer's instructions.

Ultra-Sonic Detectors shall be installed overhead on mast arms or on posts (side-fired) in close conformity with the required lines and grades.

Wire-Loop and Micro-Loop Detectors shall be installed in slots saw-cut in the pavement and oriented to the traffic lane.

The size and type of conductor and method of installation shall conform to the Department's Standard Drawings.

The saw-slots shall be filled with an approved roadway loop embedding sealer to protect the wire.

815.65: Disposal of Existing Equipment

When removal of existing traffic signal equipment and appurtenances is called for, the order of work shall be as directed by the Engineer. Removal of existing traffic signal equipment and their accessories shall be done in a manner that will not damage reusable material.

All signal posts and bases shall be separated from one another without damage to either unit (4-in. shaft unscrewed from base).

When stipulated, existing material shall be utilized in the construction of the new installation. Material to be installed shall be thoroughly cleaned before reinstallation. All reinstalled material, after cleaning and spot coating, shall receive two brush coats of paint to all parts as specified for new installations. Paint shall be applied after material is in place.

The Contractor shall furnish and install all necessary materials and equipment, including new foundations, etc. required to complete the reinstallation.

All traffic signals, flashing beacons and pedestrian signals to be reinstalled shall be relamped with new lamps of the size and type required for new installations.

Existing material removed and not utilized in the new installation shall be salvaged and transported by the Contractor to the Department Storeroom.

Underground conduit, conductors, foundations and detector frames not reused shall be removed from the project, except if not interfering with other construction, they may with written approval of the Engineer be abandoned in place.

815.66: Tests Required Before Acceptance

The Contractor shall record and make a written report of the following tests to be made on all traffic control signal installations in the presence of the Engineer:

1. Resistance Test required by 813.62: Grounding Electrodes.
2. An insulation resistance 500V megger test shall be made for each inductive loop sensor and lead-in at the controller cabinet where the combination is to be terminated.

The following test procedure shall be performed in the presence of the Engineer before and after the loop sensor is sealed in the pavement as detailed below.

The cost of equipment, labor, and materials to perform such testing and similar re-testing following repairs, replacement, or adjustment of any detector assembly within the project area shall be

included in the price bid for the Traffic Control Signal installation for that location, or under Item 819.831 if applicable.

After installation of wire loop sensors in the roadway and installation of shielded lead-in connecting the loop sensors to the terminals in the controller cabinet. each loop sensor and lead-in combination shall be tested (at the controller cabinet before termination) for proper installation.

The resistance from lead to lead of the same loop sensor shall not exceed 3 ohms per 1,000 ft as measured by a high-quality meter suitable for measurements of low resistance.

A megohm-meter test at 500 VDC shall be made between the two leads of a loop/lead-in combination temporarily spliced together, but otherwise disconnected from all terminals, and the shield drain wire and then the earth ground connection. These resistances shall be recorded and shall be equal to or greater than 100 megohms. The lowest acceptable value shall be 80 megohms under certain worst-case conditions as determined by the Engineer.

A megohm-meter test at 500VDC shall be made between lead-in shield and earth ground connection. This resistance should be at least 100 megohms. The lowest acceptable value shall be greater than 50 megohms under worst case conditions as determined by the Engineer.

If any loop sensor lead-in combination fails to pass any one of the above four tests. it shall be repaired and then re-tested on two occasions at least two weeks apart. and then shall pass on each re-test occasion.

If the loop sensor lead-in combination does not pass all these re-tests, a new loop sensor and/or lead-in shall be installed, and then shall pass all tests. at no additional cost.

After the above tests have been satisfactorily completed. all loop sensor/shielded lead-in inductances shall be measured and a written report of the results shall be filed with the Engineer and a copy stored with the "Box Prints" at the intersection along with a copy of the ground electrode resistance tests required by 813.62: Grounding Electrodes, Paragraph B and the above.

Operation Tests - After satisfactory completion of the required tests, the system(s) shall be placed in operation.

Final acceptance will not be made until the system(s) has operated satisfactorily, as designed and the timing has been fine tuned. for a period of not less than 30 days from a date designated by the Engineer.

This test period shall be included within the specified contract time. Operation of the system(s) shall not in any way be construed as an acceptance of the system(s), or any part of it, or as a waiver of any of the provisions of the contract.

The Contractor shall be responsible for the system(s) during this period of operation and they shall make any adjustments or repairs that may be required and remedy defects or damages which may occur, at their own expense.

815.67: As-Built Drawings

1. Upon completion of the work. the Contractor shall mark and submit 5 complete copies of "as built" or corrected copies of the contract plans (copies for marking furnished by the Department), showing in detail all construction changes, especially locations and depths of

conduit and locations of posts, standards, handholes, manholes and pull boxes. All "as built" drawings shall be dated.

2. Manufacturer's instructions for the maintenance, servicing and operation of all equipment, wiring diagrams of all equipment (except traffic signal controllers specified in 815.41: Controllers) and a parts list sufficient for the ordering of any parts. and any other data thereof as required by the Engineer.

Copies to be distributed as follows:

1. District Traffic Maintenance (1 complete set)
2. Traffic and Safety Section, Headquarters (1 set as described in 1. above)
3. Control Cabinet (1 set as described in 2. above) with Technical Manuals and "Box Prints" required by in 815.41: Controllers).

COMPENSATION

815.80: Method of Measurement

Traffic Control Signals, Traffic Control Signals removed and reset or stacked or transported, Traffic Signal Controllers and accessories shall each be measured for payment as a unit.

Signal post, signal post bases, mast arms (with the specified bracket arm lengths with or without transformer bases) and span wire assemblies shall be paid for at the contract unit price each complete in place.

Signal heads, mounting assembly, louvers, backplates and pole clamps will be paid for at the contract unit price each and when specified, as complete assemblies, which price shall be full compensation for work necessary or incidental to the construction of signal heads, modifying existing heads, or both, including conduit, wiring, and salvaging existing materials.

Wire Loop Installed in Roadway will be measured by the foot along the sawcut or trench that contains the wire, multiple wires or preformed loops.

All additional materials and labor required to complete all of the above items as specified shall be considered as incidental to the construction and be included in the contract price each unit.

815.81: Basis of Payment

The accepted quantities of traffic signal controllers and accessories, signal posts, signal post bases, transformer bases, mast arms with specified bracket arm lengths, span wire assemblies and traffic signal vehicle detectors shall be each measured for payment as a unit which price shall include full compensation for anchor bolts.

When specified in the Contract, Traffic Control Signals and Traffic Signals removed and reset, stacked or transported shall be paid for as a contract lump sum price which price shall be full compensation for all work necessary to perform the stated work, including, but not limited to, modification of existing signals, excavation, backfilling, compaction, concrete foundations, conduit, wiring, restoring facilities destroyed or damaged during construction and salvaging existing materials.

The work of installing Wire Loop Installed in Roadway shall be full compensation for all labor, materials, and equipment necessary to sawcut, install the wire, multiple wires or preformed loops and seal the sawcut or trench as specified.

All additional materials and labor necessary to complete the work shall be considered as incidental to the construction and be included in the lump sum price.

815.82: Payment Items

815.	Traffic Control Signal	Lump Sum
815.1	Traffic Control Signal Location No. 1	Lump Sum
815.2	Traffic Control Signal Location No. 2	Lump Sum
815.3	Traffic Control Signal Location No. 3	Lump Sum
815.4	Traffic Control Signal Location No. 4	Lump Sum
815.5	Traffic Control Signal Location No. 5	Lump Sum
816.	Traffic Signal Removed and Reset	Lump Sum
816.0__*	Traffic Signal Reconstruction *Location No.	Lump Sum
816.40	Traffic Control Signal Removed and Reset	Lump Sum
816.80	Traffic Control Signal Removed and Stacked	Lump Sum
816.90	Traffic Control Signal Removed and Transported	Lump Sum
817.10	Signal Post and Base Standard – 8 feet	Each
817.11	Signal Post and Base Standard – 10 feet	Each
817.20	Signal Post and Base Pedestal – 8 Feet	Each
817.21	Signal Post and Base Pedestal – 10 Feet	Each
817.40	Signal Base Standard – 14-inch Octagonal	Each
817.41	Signal Base Pedestal – 15-inch Square	Each
817.50 to 817.53	Signal Mast Arm *__feet – Aluminum	Each
817.60 to 817.69	Signal Mast Arm *__feet – Steel	Each
818.01 to 818.05	Signal Head 1 Way *__ Section 8-inch Lens	Each
818.11 to 818.15	Signal Head 1 Way *__ Section 12-inch Lens *(1-5)	Each
818.23 to 818.25	Signal Head 1 Way *__ Section 2-12-inch Lens	Each
818.33 to 818.35	Signal Head 1 Way *__ Section 12-inch Red Lens *(1-5)	Each
818.40	Signal Head 1 Way – 1 Section 9-inch Square Lens	Each
818.42	Pedestrian Signal Head	Each
818.51 to 818.54	*__Way Post Top Mounting Assembly	Each
818.55 to 818.58	Mast Arm Mounting Assembly – *__ Way	Each
818.59 to 818.62	Post Side Mounting Assembly – *__ Way	Each
818.63 to		

818.66	Span Wire Mounting Assembly – *__ Way	Each
818.70 to 818.71	Louvered Hood for *__ inch Signal Section	Each
818.80	Back-Plates for 8-inch Signal Head	Each
818.81	Back-Plates for 12-inch Signal Head	Each
818.82	Back-Plates for Combined 8-inch +12-inch Signal Head	Each
818.90 to 818.94	Ornamental Pole Clamp *__ inch Diameter *(4.5-inch to 8.675-inch)	Each
818.95	Pole Clamp with Wire Entrance	Each
819.	Traffic Signal Controller	Lump Sum
819.1	Traffic Signal Controller Location No. 1	Lump Sum
819.2	Traffic Signal Controller Location No. 2	Lump Sum
819.3	Traffic Signal Controller Location No. 3	Lump Sum
819.4	Traffic Signal Controller Location No. 4	Lump Sum
819.5	Traffic Signal Controller Location No. 5	Lump Sum
819.39	8 Phase, Menu-Driven Traffic Control Unit	Each
819.830	Inductive Loop Detector Amplifier	Each
819.831	Wire Loop Installed in Roadway	Foot
819.832	Microloop Installed in Roadway	Foot
819.50	Railroad Pre-Emptor	Each
819.51	Fire Station Pre-Emptor	Each
819.52	Special Internal Unit	Each
819.53	Special Function Unit	Each
819.60 to 819.64	Coordinating Unit – Type *__ *(Type FF to Type S4)	Each
819.70	Signal Light Switching Assembly – Type DC	Each
819.71	Signal Light Switching Assembly – Type SS	Each
819.72	Detector Unit Conflicting Green	Each
819.800	Magnetic Detector Amplifier	Each
819.801	Vehicle Detector (Directional) Compensated Magnetic	Each
819.802	Vehicle Detector (Multi-Lane) non-Compensated Magnetic	Each
819.803	Vehicle Detector (Single-Lane) non-Compensated Magnetic	Each
819.810	Detector Amplifier - Magnetic (Special)	Each
819.811	Detector Sensing Head - Magnetic (Special)	Each
819.820	Vehicle Presence Detector – Ultrasonic	Each
819.821	Vehicle Motion Detector – Ultrasonic	Each
819.850	Pedestrian Push Button	Each
819.851	Push Button for Green Light (Sign)	Each
819.852	Push Button for Walk Signal (Sign)	Each

SUBSECTION 820: HIGHWAY LIGHTING

DESCRIPTION

820.20: General

This work shall consist of furnishing and installing or modifying highway lighting.

Included in the work is the furnishing and installing or modifying electrical conduit, electric manholes, handholes, pull or junction boxes, concrete foundations, wire and cable, equipment grounding, ground rods, service connection, lighting poles or towers, luminaires, control equipment, load center assemblies, photoelectric control switches, contactors, time clocks, and all incidental materials necessary for operating and controlling highway lighting systems as indicated on the plans. All systems and/or components shall be complete in every respect, fully wired, thoroughly tested, and ready for use.

The locations of highway lighting equipment shown on the plan are approximate and the exact locations will be established by the Engineer in the field with the exception of Lighting Poles or Towers. Their locations may be altered 10 ft (±) only by written permission from the Engineer, if obstructions are encountered during installation.

All electrical equipment shall be designed. manufactured and tested in accordance with the applicable standards of the ANSI, IMSA, ITE, NEMA and UL and these specifications.

All work and materials shall conform to the requirements of the NEC as amended by the MEC, herein referred to as the electrical code.

Wherever reference is made to codes or standards mentioned above, the reference shall be construed to mean the code or standard that is in effect on the date of advertising of the project.

Standard symbols and construction derails for highway lighting installations are shown on the current Traffic Signal and Highway Lighting Standard Drawings.

Within 30 days following execution of the Contract, the Contractor shall submit to the Engineer for approval, a list of equipment which they propose to install. The submission shall include all equipment identified on the plans or in the specifications by the name of the manufacturer, model or identifying number of each item. The list shall be supplemented by catalog cuts and such other data as may be required, including wiring diagrams of any special equipment and of any proposed minor deviation from the plans. All of the above data shall be submitted in triplicate for checking. Following checking, correction and review, not less than 5 complete approved sets shall be resubmitted to the Engineer for distribution. The Department shall not be liable for any material purchased, labor performed, or delay to the work prior to such review and approval.

The warranties that the Contractor receives from each manufacturer of equipment and materials pertinent to the complete and satisfactory operation of highway lighting installation shall be turned over to the Department at the time of acceptance of the project, at no cost to the Department. Each warranty so furnished shall indicate its expiration date and be in effect for a minimum period of one year from the date the highway lighting was placed in continuous operation.

The contractor shall replace at their own expense any part of the lighting equipment found to be defective in workmanship, material or manner of functioning within six months from the date of final acceptance of all the installations.

If within one year from the date the highway lighting system is placed on continuous operation the equipment and materials do not meet the warrants specified above and the Engineer notifies the manufacturer or their authorized representative promptly, the manufacturer or their authorized representative thereupon shall correct any defect either by repairing or replacing any defective part or parts. at no cost to the Department.

It is the intent of the Plans, Specifications and Special Provisions to provide a complete highway lighting system through the project.

It is not intended that every fitting, minor detail or feature be shown and described, as the assumption is made that either the Prime Contractor or their Subcontractor is an expert in the particular area of responsibility and is capable of interpreting the Plans, Specifications and Special Provisions so that the bid shall include all items required and that they shall be provided and installed in a neat and workmanlike manner.

820.21: Definitions

A. Highway Lighting Poles.

An aluminum or galvanized steel structure providing up to a 50-ft mounting height for luminaires mounted on arms up to 10 ft long.

B. High Mast Tower.

A steel structure providing a mounting height greater than 50 ft for luminaires and equipped with a lowering device to permit luminaire maintenance at ground level.

C. Load Center Assemblies.

The term, as used herein, shall constitute assemblage of parts. Equipment and miscellaneous items. forming a complete and independent load center and circuit protector system, housed in a weatherproof trunk cabinet or building as specified.

D. Luminaires.

Shall consist of a housing, reflector, refractor or door glass, refractor holder or door glass holder, lamp socket, mounting device, ballast components, photoelectric control when specified and light source.

MATERIALS

820.40: General

All materials shall be new. Luminaires shall incorporate the latest photometric and design standards of IES, NEMA and UL.

Where existing systems are to be modified. the existing equipment and material shall be incorporated in the revised system, salvaged, or abandoned, as directed.

All equipment and materials shall meet the requirements specified in applicable provisions of Section 800: Traffic Control Devices.

All metal support structures shall be in accordance with the requirements of Subsection 960: Structural Steel and Miscellaneous Metal Products.

820.41: Design and Equipment Requirements

The complete structures with all luminaires and appurtenances attached thereto shall be designed and constructed in accordance with the requirements of AASHTO *Standard Specifications for Structural Supports for Highway Signs, Luminaires and Traffic Signals* for the following AASHTO criteria: 1) Fatigue Category No. 1, 2) Design Wind Speed 130 MPH and 3) 50 Year Design Life.

Where aluminum alloy parts are fastened to steel or other dissimilar materials, the aluminum shall be kept from direct contact with the steel or other dissimilar materials by methods approved by the Engineer.

A. Highway Lighting Poles.

1. Poles from 30 to 50 ft shall be made of aluminum or galvanized steel. Galvanizing shall meet the requirements of Section M7: Paints, Protective Coatings. Aluminum poles over 40 ft may be in two sections telescoped together and lapped not less than two times the pole diameter at the lapped-joint. Aluminum poles shall be produced from continuous extruded tube and shall not be sleeved in the base portion to compensate for thinner walled tubing. Each pole shall be designed and fabricated in a manner that will accommodate a single or double arm 10 ft in length.
2. Arms shall be designed for 2-in. slip fitter mounted with 75-lb luminaires that have a projected area of 3.3 ft^2.
3. Poles shall have a handhole with a reinforced frame and cover. The opening shall be approximately 4 in. x 6 in. located approximately 12 in. from the bottom of the pole and placed 90° to the arms. Pole cap shall be the same material as the pole, watertight and held securely in place on the pole by a set screw or screws or stamped cap.
4. Bonding and grounding shall be provided that will ensure an effective path for fault current that facilitates the operation of an overcurrent protection device.
5. Anchor bolts nuts, bolts, and washers shall conform M8.01.5: Anchor Bolts, Nuts and Washers and the Standard Drawings.
6. The arms shall be furnished with a finish similar to that of the pole. The exterior of the pole and arm shall be free of protuberances, dents, cracks, discolorations and other imperfections marring their appearance.
7. For shipping purposes, the pole and arm shall be protected to preserve the finish.
8. The dead load deflection at the top of the pole caused by the mass of the arm, luminaires and all appurtenances attached thereto shall not exceed 2% of the pole length.
9. Aluminum poles shall have a Combined Stress Ratio (CSR) no greater than 0.95. Aluminum poles over 20 ft in length shall have internal dampers installed to reduce vibrations.
10. An identifying tag shall be affixed to the pole at a readable location on the side of the pole away from traffic.
11. Information on the tag shall include, manufacturer's name and order number, date of manufacture and pole material.

B. High Mast Towers.

All high mast towers shall be made of galvanized steel.

Anchorage shall consist of four or more high strength steel bolts, having two heavy duty hex nuts, and fabricated from high strength low alloy steel having a minimum yield of 50 ksi positioned and designed to withstand the forces corresponding to the moment which will cause failure to the shaft.

Anchor bolts shall be furnished with a template and a prefabricated reinforcing cage welded to the bolts.

C. Highway Luminaires.

The luminaire shall be of the horizontal burning gaseous discharge lamp type with IES Type II, III or IV lateral light distribution, as indicated on the plans, with medium vertical light distribution and semi-cutoff vertical light control.

The luminaire shall have a precision-case aluminum housing providing for slipfitter end mounting capable of adapting to 1.25-in. or 2-in. mounting brackets with provisions for vertical adjustments of not less than 3°. The reflector shall be of detachable snap-in design, manufactured of polished aluminum. The refractor shall be mounted in a door frame assembly and hinged with a safety catch to the luminaire at the house side and fastened at the street side by an automatic type latch. The refractor and door frame assembly shall be forced upward at the street side by spring pressure when latched against the gasket seat. Gaskets between the reflector and the refractor and the socket entry shall be made of a material capable of withstanding the temperatures involved and be held securely in place. Refractor shall be heat resisting glass with inner or outer prisms.

When stipulated, luminaires shall be furnished and installed with glare shields.

Luminaires shall have an internal ballast of the regulator type capable of operating from multiple circuit voltages indicated on the plans, at a power factor of not less than 95% . The ballast shall be pre-wired to the lamp socket and terminal board, requiring only connection of the power supply leads to the ballast primary terminals. The ballast shall provide regulation within 4% (8% for 1,000-watt units) variation in center rated lamp watts with a ±13% variation in primary volts from the ballast voltage-design center. Ballast shall provide satisfactory lamp starting to -20°F, minimum over the recommended line voltage variation. Ballast and capacitor components shall be arranged so that their operating temperature is not exceeded.

The luminaire shall include a photoelectric control device, as specified in Paragraph I, and locking type mounting receptacle in accordance with NEMA standards. The receptacle shall be pre-wired to the terminal board.

Lamps shall be of the gaseous discharge type and wattages indicated. They shall conform to ANSI (ASA) requirements as listed in reputable lamp manufacturers catalogues. Lamps failing during first 1,000 hours shall be considered defective and be replaced at no cost to the Department.

D. Area Lighting Luminaires.

Area lighting luminaires are used mainly for special applications. Where this type of lighting is required, Special Provisions and Plans will be prepared for the particular project. In general luminaires will be similar to luminaires specified in 820.41: Design and Equipment Requirements.

E. Flood Lighting Luminaires.

Flood lighting luminaires are used mainly for special applications. Where this type of lighting is required. Special Provisions and plans will be prepared for the particular project. In general, luminaires will be similar to luminaires specified in 820.41: Design and Equipment Requirements and will have special mounting arrangements.

F. Underpass Lighting Luminaires.

Luminaires shall consist of a one or two lamp VHO/CW/RS fluorescent type with internally mounted ballast and recessed sockets. The housing shall be one-piece aluminum with sufficient structural bracing for self-support. The ends of the luminaire shall be tapped for ¾-in. conduit. The reflector shall be polished aluminum readily removable for access to the interior of the housing for wiring and servicing. The refractor shall be heavy plastic and hinged to allow the cover to swing open. Gaskets shall be provided to form a seal between the housing and refractor. Luminaire shall be watertight and capable of withstanding water pressures up to 100 psi with standard cleaning nozzles commonly used in cleaning tunnels. Luminaires shall be provided with adjustable aluminum or stainless steel brackets to allow a 90° minimum rotation of the luminaire through the longitudinal axis.

Luminaires shall have an internal ballast capable of operating from multiple circuit voltages indicated on the plans and capable of furnishing design voltages and current for the specified fluorescent lamp or lamps. It shall operate satisfactorily over a voltage range of ±5% of its nominal primary voltage rating. Line feedback from the lamp through the power line shall be corrected by means of a built-in interference suppressor incorporated in each ballast. Power factor correction shall be not less than 90% and each ballast shall be capable of starting its lamp or lamps at a temperature of -20°F.

G. Sign Lighting Luminaires.

Sign lighting luminaires may be of the incandescent, gaseous discharge or fluorescent type. Where this type of lighting is required, Special Provisions and Plans will be prepared for the particular project. In general luminaires will be similar to luminaires specified in Paragraph C and Paragraph F.

H. External Ballasts.

The basic ballast housing shall be adaptable by brackets, lugs, or adaptors for either pole-base, pole-side, pole-top, flat wall mounting or direct burial. The housing shall be of heavy gauge aluminum or fiberglass. All assembled core windings and terminals shall be sealed within the housing by a high-melting point filling compound. The electrical characteristics shall conform to ballasts mounted integrally as specified in Paragraph C and Paragraph F. A manufacturer's name plate shall be an integral pan of the housing. The name plate shall have the manufacturer's name, model number, serial number, hook-up diagram, power supply data and the load that the ballast is capable of operating.

I. Photo Electric Control.

The controls shall be twist-lock plug-in devices to be used with highway lighting equipment conforming to NEMA standards. They shall be of the tubeless type rated for 50 or 60 Hz, alternating current, at the following voltages and load capacity with inrush current rating not less than 100 A:

1. 105-285V, 18,000 volt-amperes
2. 120V, 1,800 volt-amperes
3. 208V, 1,800 volt-amperes
4. 240V, 1,800 volt-amperes
5. 277V, 1,800 volt-amperes
6. 480V, 1,800 volt-amperes

Controls shall have a tum-on range of 0.5 fc to 2.5 fc and shall be factory adjusted to tum on at 1 fc. The tum off level shall be between 1 fc and 2 fc higher than turn on levels. It shall be possible, by means of simple hand tools or by a calibrated adjustment knob, to adjust the tum on time of the lights when the north sky illumination falls within the range of values specified herein.

Normal operation of the photo electric control shall not be affected by line voltage variations of ±10%. Minimum operating temperature range shall be from -20°F to +150°F. The unit shall have a built-in surge protective device for protection from induced high voltage and follow through currents.

A time delay feature shall be incorporated as a pan of the control circuit to prevent false turn-offs by transient light. The controlled lighting load shall remain on or become energized in the event of any functional failure of the photo electric control circuit.

J. Multiple Control Switch.

The switch shall be equipped for either pole or wall mounting with all components (relays. etc.) housed in a weatherproof enclosure and designed for controlling loads up to 6,000 watts. The switch shall be pre-wired complete with NEMA twist-lock receptacle for an integrally mounted photoelectric control, as specified in Paragraph I or controlled remotely by a switch. Photo electric control voltage must match multiple control switch voltage.

K. Multiple Circuit Contactor.

The contactor shall be an unenclosed single phase, two-pole open type magnetic contactor of the rating indicated. Contactors shall be constructed for surface mounting on a false back. The contactor coil shall be remotely operated by a multiple control switch as specified in Paragraph J and a photo electric control as specified in Paragraph I or controlled remotely by a switch as specified in Paragraph L, or controlled remotely by a time clock as specified in Paragraph M. as shown on the plans or specified in the Special Provisions.

L. Remote or Test Switch.

A heavy duty, single-pole tumbler switch rated at 20 amperes, encased in a heavy-duty metal weatherproof housing, shall be installed in the control cabinet or lighting pole bases as a highway lighting test switch. The switch shall be rated for operation on the voltage specified for the device it controls. The switch shall be wired so as to shunt the photo electric control, multiple control switch, multiple circuit contactor or time clock and energize the lighting circuits.

M. Astronomic Time Clock.

Astronomic time switches shall be 35 A, double pole, single throw, heavy duty, 42°30' North Latitude, astronomic dial street light type with high torque synchronous motor and 10-hour main spring operation to provide accurate timing during power interruptions. When power is restored after any failure, the motor shall resume timing and automatically wind the main spring.

The motor shall be designed to operate on 120/240VAC 60 Hz at temperature ranging from -20°F to +150°F.

The time clock shall have a wall mounted pressed steel case with rain-tight gasketed door cover and mounted in the load center housing.

N. Service Riser Pipe.

Galvanized steel conduit shall meet the requirements of M5.07.1: Electrical Conduit-Rigid Metallic (Type RM).

O. Secondary Conductors.

Secondary conductors shall conform to the requirements of 813.63: Service Connections.

P. Service Cabinet or Housing.

The housing for load center assemblies shall be a trunk type cabinet as specified in Subsection 815: Traffic Control Signals for vehicle-actuated traffic signal controllers, and of a size to house all equipment. The cabinet shall be the product of a Manufacturer with an established reputation who has designed and produced similar cabinets.

Q. Circuit Protection.

The Contractor shall furnish and install on the rear wall of the trunk type cabinet a power distribution panel. A main bus shall be provided, protected by a main and branch circuit breakers. All equipment shall be designed for the amperage, voltage and phase designated. The general arrangement of circuit breakers shall be in accordance with the circuit diagram shown on the plans. Circuit breakers shall be unenclosed molded case bolt-on type with end conductor terminals, suitable for surface mounting on a metal false back. The Contractor shall provide a chart mounted on the cabinet door identifying circuit breakers and the circuits they control.

Circuit breakers shall be of the rating shown on the plans.

R. Load Center Concrete Foundation.

The Contractor shall construct the service cabinet foundation of reinforced cement concrete as shown on the standard drawings on a 12-in. gravel sub-base.

S. Meter Socket.

A 200-ampere meter socket approved by the serving utility shall be furnished and installed on the service cabinet or where directed by the serving utility.

CONSTRUCTION METHODS

820.60: General

Details of construction shall conform to all applicable provisions of Sections listed 820.40: General and the specifications set forth hereinafter.

Highway lighting poles, area lighting poles and high mast towers shall be handled in loading, unloading and erecting in such a manner that they will not be damaged. Any parts that are damaged due to the Contractor's operations shall be repaired or replaced at the Contractor's expense.

Poles or towers shall not be erected on concrete foundations until the concrete has set for at least 28 days.

All surfaces of aluminum bases in contact with cement concrete shall be field coated with an aluminum impregnated caulking compound recommended by the manufacturer of the base.

Poles and towers shall be raked sufficiently to be plumb after all loads have been placed, poles shall be raked by adjusting the 2 nuts supplied with each anchor bolt. The mounting height shall be measured from the light source to the roadway surface directly below. The bracket arm shall be securely attached to the shaft and the pole erected with the bracket and perpendicular to the center line of the roadway.

The Contractor shall mark on each light pole or tower, 6 ft above the roadway suitable numbers and letters two 2 in. minimum height displaying the pole number and circuit to which it is connected.

The luminaires shall be installed on the brackets specified, parallel to the road surface or aimed as indicated on the plans, securely fastened, lamped, connected, cleaned and ready for operation.

The service riser, the service cabinet, and the concrete mat shall be installed as shown on the plans and as required by the Code. The work under this item shall include all conduit to 4 ft beyond the load center. The service cabinet shall be installed on the concrete mat, complete with distribution panel mounted inside. The electrical components shall be mounted with machine screws and wired as shown on the plans or as directed. All conduits in the service cabinet shall be bonded together and grounded to the cabinet with not less than #8 AWG bare copper conductors. A ¾-in. x 12-ft long ground rod shall be driven in accordance with 813.62: Grounding Electrodes and stubbed 6 in. above the concrete foundation. Not less than a #2 AWG bare copper grounding conductor from the neutral bus shall be run continuously to the ground rod.

Photoelectric control devices shall be mounted with the light sensitive unit facing toward the north sky. Method of mounting shall be as indicated or as specified in 820.41: Design and Equipment Requirements, Paragraph I. Control switch contactors and time clocks shall be mounted as specified herein before.

Test switches shall be mounted as specified. When mounted in lighting pole base it shall be supported on an “L” shape galvanized steel bracket secured by anchor bolt and nut.

820.61: Tests Required Before Acceptance

The Contractor will be required to test the entire system for continuity, grounds, resistance to ground, insulation resistance, and make provisions for high voltage dielectric strength tests, before any equipment is connected. This shall be done by means of a 500V megohm-meter test which will

indicate the insulation of any circuit or group of circuits. When the insulation resistance is less than 100 megohms between insulated conductor and ground (system ground point at the load center), the Contractor shall locate the point or points at fault, make proper corrections and then demonstrate by further tests the elimination of such fault. With all equipment connected to the wiring system, a functional test shall be performed by the contractor using the system power, if not available the Contractor shall provide temporary power where and as required. The tests shall be performed in the presence of the Engineer to demonstrate that the system as a whole, and all parts thereof, function as specified or intended. Any defective materials, equipment or faulty or improper installation shall be permanently corrected by repairs or replacements to be made by the Contractor. All tests and any necessary repairs which are indicated by them to produce a fault-free system shall be performed at the Contractor's expense.

Operation Tests.

After satisfactory completion of the required tests, the system shall be placed in operation. Final acceptance will not be made until the system has operated satisfactorily, as designed, for a period of not less than 30 days from a date designated by the Engineer. This test period shall be included within the specified contract time. Operation of the system shall not in any way be construed as an acceptance of the system, or any part of it, or as a waiver of any of the provisions of the contract. The Contractor shall be responsible for the system during this period of operation and they shall make any adjustments or repairs that may be required and remedy defects or damages which may occur, at their own expense.

Any other incidental work or materials for which no basis of payment is provided will be considered as completely covered by the unit price bid.

COMPENSATION

820.80: Method of Measurement

Highway lighting poles, area lighting poles and high mast towers, with the specified mounting heights, bracket arm of specified length and anchor bolts; luminaires of the size and type specified; photo electric control (including test switch); multiple control switch; multiple circuit contactor; time clock; and highway lighting load center, with all necessary nuts, bolts, connectors, clamps, equipment grounding connector, and incidental material to form a complete unit shall each be measured for payment as a unit.

Highway lighting shall be measured as a complete installation and paid at a contract lump sum price.

820.81: Basis of Payment

The lump sum price for “Highway Lighting” and “Highway Lighting Load Center” shall be full compensation for all work necessary or incidental to the construction of the highway lighting installation, modifying existing installations, or both including excavation, backfilling, compaction, concrete foundations, conduit, wiring, and salvaging existing materials. All additional materials and labor required to complete the highway lighting installation shall be considered as incidental to the construction and be included in the respective lump sum contract price. All materials shall conform to Section 800: Traffic Control Devices and Division III: Materials Specifications of these specifications.

The accepted quantities of highway lighting poles, area lighting poles, high mast towers, luminaires, photo electric control (including test switch), multiple control switch, multiple circuit contactor and time clock will be paid for at the contract unit price each, for the length, type and size specified, which price shall include full compensation for anchor bolts and miscellaneous hardware.

No direct payment will be made for the following incidental materials: conduit fittings, all bolts, nuts and washers and wiring.

820.82: Payment Items

820.10	Highway Lighting – Roadway	Lump Sum
820.11	Highway Lighting – Underpass	Lump Sum
820.12	Highway Lighting – Area	Lump Sum
820.13	Highway Lighting – Sign	Lump Sum
821.10 to 821.15	Highway Lighting Pole (Anchor Base) *(__-Foot Bracket)	Each
821.20 to 821.25	Highway Lighting Pole (Anchor Base) Twin *(__-Foot Bracket) *(4- to 15-Foot)	Each
821.30 to 821.70	Highway Lighting Pole (Anchor Base) DBL*__+__-Foot Brackets *(4+6 to 12+15)	Each
822.10 to 822.15	Highway Lighting Pole (Transformer Base) *__-Foot Bracket	Each
822.20 to 822.25	Highway Lighting Pole (Transformer Base) Twin *__-Foot Bracket *(4- to 15-foot)	Each
822.30 to 822. 70	Highway Lighting Pole (Transformer Base) DBL*__+__-Foot Brackets *(4+6 to 12+15)	Each
822.83 to 822.98	High Mast Tower (__-Foot Mounting Height)	Each
823.10 to 823.14	Highway Lighting Luminaire *-Watt *(175- to 1,000-Watt)	Each
823.15 to 823.21	Area Lighting Luminaire *-Watt *(175- to 4,000-Watt)	Each
823.22	Flood Lighting Luminaire Less Than 500-Watt	Each
823.23	Flood Lighting Luminaire 500-Watt and Over	Each
823.30 to 823.32	Underpass Lighting Luminaire *-Foot Fluorescent	Each
823.33 to 823.35	Sign Lighting Luminaire *-Foot Fluorescent *(4- to 8-Foot)	Each
823.40	Sign Lighting Luminaire 175-Watt	Each
823.41	Sign Lighting Luminaire 250-Watt	Each
823.50	Photoelectric Control	Each
823.51	Multiple Control Switch	Each
823.52	Multiple Circuit Contractor	Each
823.53	Time Clock	Each
823.60	Highway Lighting Load Center	Lump Sum
823.70	Highway Lighting Pole and Luminaire Removed and Reset	Each
823.71	Highway Lighting pole and Luminaire Removed and Stacked	Each

SUBSECTION 824: FLASHING BEACONS, ILLUMINATED WARNING SIGNS, AND LIGHTED BARRIER ARROWS

DESCRIPTION

824.20: General

This work shall consist of furnishing and installing or modifying flashing beacons, highway illuminated wanting signs and lighted barrier arrows at designated locations as shown on the plans and detail sheets in conformance with these Specifications and the Standard Drawings.

Included in the work is the furnishing and installing, modifying, removing, resetting, stacking or transporting existing control equipment, signal beads, electric lamps, posts and bases, poles, pedestals, mast arms, barriers, barrier arrows, service connections, wire and cable, pull and junction boxes, electrical conduits, and all incidental materials necessary for operating and controlling the beacons, signs and arrows.

The locations of beacons, signs, barriers, control equipment and appurtenances shown on the plans are approximate and the exact location will be established by the Engineer in the field.

MATERIALS

824.40: General

When existing systems are to be modified, the existing equipment and materials shall be incorporated in the revised system, salvaged or abandoned as directed.

Equipment and materials shall meet the requirements specified in Section 800: Traffic Control Devices for Signals & Wiring.

824.41: Highway Illuminated Warning Signs and Barrier Arrows

Illuminated warning signs and barrier arrows shall be designed so that lamps, tubes, electrodes, transformers or ballasts and all wiring shall be totally enclosed and protected from the weather. Each sign or arrow shall be delivered to the project completely finished and assembled, ready for erection.

824.42: Flasher

The flasher unit shall be two-circuit jack mounted using solid state circuiting (no moving parts) designed to operate on 105-130VAC, 60 Hz. The output load rating with incandescent traffic signal lamps or an inductive load shall not be less than 10 A. The unit shall be capable of providing alternating flashing operation at the rate of 50 to 60 flashes per minute. The flasher unit shall be individually housed and protected from the weather and must not present a shock hazard to maintenance personnel.

Filter

Each flasher shall be equipped with a suitable filter wired or built into the flasher in the manner recommended by the Manufacturer. Any filter not completely eliminating radio interference shall be replaced.

Housing

The combined flasher and filter shall be installed in an approved weatherproof housing equipped with a disconnect block for shutting off the system. The cabinet shall be fastened to a standard 8-ft signal post by means of a suitable saddle or backplate. The flasher and filter shall be fastened to a backboard and the combined assembly shall be removable from the housing intact.

COMPENSATION

824.80: Method of Measurement

Flashing beacons, highway illuminated warning signs and lighted barrier arrows will be measured as completed units.

824.81: Basis of Payment

Flashing beacons, highway illuminated warning signs and lighted barrier arrows will be paid for at the respective contract unit price complete in place.

824.82: Payment Items

824.10	Flashing Warning Beacon Type D	Lump Sum
824.20	Flashing Warning Beacon Type A	Lump Sum
824.30	Flashing Warning Beacon Type B	Lump Sum
824.40	Flashing Warning Beacon Type C	Lump Sum
824.50	Flashing Warning Beacon Removed and Reset	Lump Sum
824.51	Flashing Warning Beacon Removed and Stacked	Lump Sum
824.60	Highway Warning Sign – Illuminated	Each
824.61	Highway Warning Sign – Illuminated	Lump Sum
824.70	Highway Warning Sign - Illuminated R+R	Lump Sum
824.71	Highway Warning Sign - Illuminated R+S	Lump Sum
824.72	Highway Warning Sign - Illuminated Removed and Transported	Lump Sum
824.80	Lighted Barrier Arrows	Each
824.81	Lighted Barrier Arrows	Lump Sum
824.90	Lighted Barrier Arrows Removed and Reset	Lump Sum
824.91	Lighted Barrier Arrows Removed and Stacked	Lump Sum
824.92	Lighted Barrier Arrows Removed and Transported	Lump Sum
824.93	Lighted Barrier Arrows Removed Transported and Reset	Lump Sum

SUBSECTION 828: TRAFFIC SIGNS

DESCRIPTION

828.20: General

The provisions of this section shall apply to fabricating, furnishing and erecting, overhead and roadside guide signs, warning and regulatory signs, route and project markers and supports for delineators and markers.

Traffic Signs are officially erected devices, mounted on fixed or portable supports, whereby specific

messages are conveyed by means of words or symbols, for the purpose of regulating, warning or guiding traffic.

The signs, foundations and supports shall be fabricated and erected in conformity with the AASHTO *Standard Specifications for Structural Supports for Highway Signs, Luminaries and Traffic Signals*.

828.21: Plans

The Contractor shall develop plans for the foundations, structural supports and sign panels, including the spacing of panels, excepting for the designs shown as typical on the standard drawings and plans.

MATERIALS

828.40: General

Materials shall meet the requirements specified in the following Subsection of Division III. Materials:

Retroreflective Sheeting M9.30.0
Acrylic Plastic 3.25-Inch Diameter Center-Mount Reflector M9.30.4
Demountable Reflectorized Delineator-Guard Rail M9.30.7
Reflectorized Flexible Delineator Post M9.30.8

828.41: Retroreflective Sheeting

Retroreflective Sheeting shall meet the requirements of M9.30.0: Retroreflective Sheeting.

828.42: Panels

Aluminum sign panels shall be either Type A or Type B. Sign supporting hardware shall be aluminum or stainless steel.

Type A Panels shall be fabricated from flat sheet Aluminum Alloy of the following types:

A-1:

Flat sheet sign panels shall be fabricated from aluminum sheeting meeting ASTM B209, Alloy 6061-T6 or Alloy 5052-H38. Panels mounted with P-5 posts (square tube posts or U channel posts) shall be 0.08 in. (2 mm) thick. Panels mounted with single round breakaway posts shall be 6 mm thick.

A-2:

Flat sheet sections with extruded tabs shall be fabricated from:

1. Sheeting 0.125 in. thick, ASTM B209, Alloy 3033-H18.
2. Extruded parts ASTM B221, Alloy 6063-T6.

A-3:

Flat sheet sections with welded or flush riveted locking tabs and clips shall be fabricated from:

1. Flat sheet ASTM B209, Alloy 6061-T6 or Alloy 5052-H38.
2. Extruded parts as specified by the Manufacturer.

Route marker overlay on directional sign panels shall be fabricated from Aluminum Alloy 5052-H38 0.08 in. thick. Material for attachment shall be compatible with materials joined and shall conform to the following ASTM specifications:

Table 828.42-1: Sign Panel Attachment Materials Specifications

Part	Aluminum	Stainless Steel
Bolts	B211 6061-T6 Alloy	F593 Type 304 or 305
Rivets	B316 6061-T6 Alloy	Not Applicable
Nuts	B211 6061-T6	F594 Type 304 or 305
Washers	B209 Alclad 2024-T4	Compatible with Materials Joined

Type B Panels shall be fabricated of extruded Aluminum ASTM B221. Alloy 6063-T6 shall be ⅛ in. thick, 12 in. wide and of bolted joint design. Only one 6-in. panel shall be used where the overall height of a sign requires one panel less than 12 in.

828.43: Legends (Type A, B, C)

The type of legend shall be as specified and shown on the plans except as follows:

a. State and U.S. Route Markers shall have Type C Silk Screen Processed Legends.
b. Interstate Route Markers on Guide Signs on Feeder roads shall have Type B Permanently Applied Legends.
c. Individual Interstate Route Markers shall have Type B Permanently Applied Legends with the required Silk Screen Processed Legend superimposed thereon.
d. Individual Interstate Route Markers on Overhead Signs shall have Type A Demountable Flat Numerals.
e. Type B aluminum signs, per 828.42: Panels, shall have either Type A Demountable Flat or Type B Permanently Applied Legends.

A. Legend Type A - Demountable Flat.

Legends shall be reflective or opaque sheeting as specified conforming with the photometric and other requirements of 828.41: Retroreflective Sheeting. Legends shall be applied to sheet aluminum in a manner specified by the sheeting Manufacturer.

Base material shall be of sheet aluminum ASTM B209, Alloy 3003 H14.

Demountable legends shall be of sheet aluminum, those up to and including 12 in. in height shall be 0.040 in. in thickness; those over 12 in. in height shall be 0.064 in. in thickness.

B. Legend Type B - Permanently Applied Legend.

Legends shall be reflective or opaque sheeting applied directly to a clean, dust-free background in a manner specified by the sheeting manufacturer.

Legends shall be cut neatly at intersect on panel edges.

Heat activated adhesive-coated material shall be applied only by mechanical means.

Finish shall be as specified in 828.51: Retroreflective Sheeting, Paragraph B.

C. Legend Type C - Silk Screen Processed.

The legends and shields shall be of the series and size specified in the AASHTO Manual for "Signing and Pavement Markings," and the dimensions, details of the letters with respect to each series as specified in the FHWA publication: "Standard Alphabets for Highway Signs," or as specified and shown on the plans.

828.45: Reflectorized Flexible Delineator Posts

Reflectorized Flexible Delineator Posts shall meet the requirements of M9.30.8: Reflectorized Flexible Delineator Post.

828.46: Delineation for Guardrail Termini

Delineators for Guardrail Termini shall meet the requirements of M9.30.10: Guardrail Termini Delineator.

FABRICATION

828.50: General

Sign fabrication shall be done in a plant properly equipped for the production of the types of signs specified.

Sign panels shall show careful workmanship and present a reasonably plane surface with the message and outlines clear and sharp.

Finished sign panels shall be shipped in such manner as to ensure arrival on the project in undamaged condition, where they shall be properly protected from dirt, scratches, hand-marks and other blemishes until erected and accepted.

828.51: Retroreflective Sheeting

A. Application.

Retroreflective sheeting shall be applied to properly treated base panels with mechanical equipment in a manner specified for the manufacture of traffic control signs by the sheeting manufacturer. Heat activated adhesive coated sheeting shall be pre-perforated.

Sign faces, comprising two or more pieces or panels of retroreflective sheeting, must be carefully matched for color at the time of sign fabrication to provide uniform appearance and brilliance both day and night. Alternate, successive width sections of either sheeting or panels must be reversed and consecutive, to ensure that corresponding edges of retroreflective sheeting lie adjacent on the finished sign. Nonconformance may result in nonuniform shading and an undesirable contrast between adjacent widths of applied sheeting, which will not be acceptable.

Pressure sensitive adhesive coated sheeting shall be overlapped at splices not less than $^{3}/_{16}$ in. Heat activated adhesive coated sheeting may be spliced with overlap not less than $^{3}/_{16}$ in. or butted, gap not to exceed $^{1}/_{32}$ in. Only butt splices shall be permitted on signs screen-processed with transparent color. Sheeting applied to extruded sections shall extend over top edges and down side legs a minimum of $^{1}/_{16}$ in. No splices shall be allowed on sign panels 20 ft² or under.

The panel and legend of signs shall be manufactured from the same manufacturer and same grade of sheeting (i.e. Type IX legend on Type IX panel), except where black opaque legends or panels are specified. If the sign legend is black opaque, panel sheeting shall be Type IV, Type VIII, Type IX, or Type XI; if the sign panel is black opaque, legend sheeting shall be Type IV, Type VIII, Type IX, or Type XI.

B. Finish (Protective Coating).

1. When pressure sensitive adhesive coated retroreflective sheeting is used all sheeting splices and sign edges shall be sealed with materials recommended by and in a manner specified by the sheeting manufacturer.
2. Dry heat activated adhesive coated retroreflective sheeting when applied to aluminum or high-density plywood shall be edge sealed as specified by the sheeting manufacturer.

828.52: Panels

White numerals 1-inch in height, designating the size of sign panel, date of fabrication. fabricator, manufacturer and type of sheeting shall be affixed at the bottom left rear corner of all ground mounted guide, historical, cultural, recreational and specific information service signs.

All other ground mounted signs shall have black numerals ½ in. in height, designating the size of sign panel, date of fabrication, fabricating manufacturer and type of sheeting affixed to the bottom left rear of each panel.

White numerals 1.5 in. in height, designating the size of sign panel, date of fabrication, fabricator, manufacturer and type of sheeting shall be affixed at the bottom left corner of the face of each overhead sign panel.

The code numbers of fabricators and manufacturers will be obtained from the Department.

Black numerals shall be used in place of white numerals where the background they are affixed to is white or aluminum.

Panel surfaces upon which retroreflective sheeting is to be applied shall not be painted.

Fabricated sections with extruded legs shall be manufactured in accordance with the typical detail plans. The face shall have a reasonably plane surface free from protrusions and depressions.

Panels shall be composed in increments 48 in. wide. Panels less than 48 in. wide shall be composed of one sheet. Signs greater than 48 in. shall have no more than 2 sheets less than 48 in. wide.

Sheet increments shall be continuous from top to bottom of sign panel. No horizontal joints will be permitted. Panel assembly shall include all fasteners and backing strips also fabricated from aluminum sheeting ASTM B209, Alloy 6061-T6.

Backing strips shall be provided at every joint and held firmly in place with proper fasteners as recommended by the manufacturer. Caution shall be used in assembly to prevent any projections, dents or gouging of the panel face. The corners of signs shall be rounded to a radius equal to the minimum dimension of the sign except that a minimum corner radius of 12 in. shall be used.

Route markers shall be attached to aluminum sign panels with aluminum or stainless steel ¼-in. diameter slotted-head bolts with nuts and washers or ¼-in. diameter rivets.

Treatment of Aluminum Sign Panels Prior to Application of Retroreflective Sheeting.

1. Degreasing.
   a. Vapor degreasing: by total immersion of the panel in a saturated vapor or trichloroethylene. Trademark printing shall be removed with lacquer thinner or controlled alkaline cleaning system.
   b. Alkaline degreasing: by total immersion of the panel in a tank containing alkaline solutions, controlled and titrated to the solution manufacturer's specification.
2. Rinsing. After satisfactory degreasing, the panels shall be thoroughly washed with running water.
3. Drying. The panel shall be thoroughly dried by use of a forced hot air dryer.
4. Metal shall not be handled between cleaning and etching operation and the application of retroreflective sheeting, except with devices or clean canvas gloves.
5. Metal shall not come in contact with greases, oils or other contaminants prior to the application of retroreflective sheeting.

828.53: Legends

A. Type A.

The letters, numerals, symbols and borders shall be attached to the sign background as specified in 828.52: Panels.

B. Type B.

See 828.43: Legends (Type A, B, C), Paragraph B.

C. Type C.

The legends shall be applied by the Silk Screen Process or by using cutouts from an approved type black film superimposed on retroreflective sheeting.

The flexible black gloss silk screen ink shall conform to the manufacturer's recommendations.

828.54: Demountable Reflectorized Reference Location Signs

The panels shall be aluminum (Type A) of the size shown on the plans. Retroreflective sheeting shall conform to 828.41: Retroreflective Sheeting.

Legends shall be Type B as specified under 828.43: Legends (Type A, B, C), Paragraph B.

828.57: Reflectorized Flexible Delineator Posts

Shall be installed in accordance with the manufacturer's recommendations at locations indicated on the Plans and/or as directed.

828.58: Demountable Reflectorized Station Markers and Project Markers

The panels shall be aluminum (Type A), 0.063 in. thick. They shall be 4 in. wide and of a length required to display the station numerals or Federal-aid Number shown on the plan.

The reflective background sheeting attached to the aluminum sheeting shall conform to the requirements of 828.41: Retroreflective Sheeting. The color of the background sheeting shall be orange for Beginning and End project markers and white for intermediate Station project markers.

The panel shall be punched or sheared to size, with ¾-in. radius corners, having two square or round ¼-in. mounting holes.

The numerals shall be type D, black, die-cut, pre-spaced conforming to the FHWA Standard Series 1.5-in. type C. Numerals shall have a pre-coated pressure activated adhesive and be applied as recommended by the manufacturer of the retroreflective sheeting.

828.59: Street Name Sign

The panels shall be fabricated from Type A aluminum 0.080 in. thick. Panels shall be a minimum of 12 in. wide and of a length required to display the street name.

Retroreflective sheeting shall conform to the requirements of 828.41: Retroreflective Sheeting. The color of the legend should be white, and the color of the background should be green.

The legend shall be Type B or C. Legend size and font shall conform to the MUTCD.

If specified, city/town seals on signs shall conform to the MUTCD.

ERECTION

828.60: General

Demountable reflectorized station markers and project markers shall be fabricated and erected as shown on the plans and/or as directed by the Engineer.

Demountable reflectorized reference posts shall be mounted on new P-9 Steel posts or on existing posts as shown on the plans and as directed.

In no instance shall delineators be installed on sections of guard rail which deviate substantially from the alignment (vertical or horizontal) of the roadway or which are located more than 8 ft from the edge of the paved surface.

Exceptions and/or modifications to the above shall be made only with the approval of the Engineer in the field.

When roadway alignment permits, the reflector portion of each delineator shall be positioned so that it will be clearly visible for a distance of 1,000 ft under normal weather and atmospheric conditions when illuminated by the high beam of standard automobile headlights on vehicles in the lane adjacent to the delineator.

Delineation for Guard Rail Termini shall be mounted within 6 in. perpendicular to the web of the first and last full height guard rail posts in a section of guard rail.

Street name signs shall be mounted on one standard P-5 breakaway post assembly. Street name signs shall be fabricated and erected as shown on the plans and/or as directed by the Engineer.

828.61: Attachment to Posts

Demountable Reflectorized Reference Location Signs shall be attached to P-5 posts as shown in the Construction and Traffic Standard Details.

Demountable Reflectorized Station Markers and Project Markers, and Delineation for Guardrail Termini shall be attached to the P-9 posts by a connection fabricated as follows:

Two rivets, each consisting of pin and collar, shall be used to attach the marker to the post. The collar shall be cold-swaged into annular locking grooves on the pins by a method recommended by the manufacturer.

Pin rivets shall be $^{3}/_{16}$ in. in diameter of aluminum ASTM B316, Alloy 2024-T4, collars shall be $^{3}/_{16}$ in. in diameter aluminum of ASTM B209, Alloy 6061-T 4, with a minimum washer face of ½ in. in diameter. The pin rivets shall have truss heads and grip range of 1-in. ± $^{1}/_{16}$ in.

An approved two-piece rivet type sign fastener installed by expanding the blind rivet component inside the semi-tubular rivet component may be used.

COMPENSATION

828.80: Method of Measurement

The quantity of Overhead Guide Signs, Roadside Guide Signs. Warning Signs. Regulatory Signs and Route Markers (Shields) shall be the actual total number of square feet of panel in each sign classification.

The area of Route Markers when attached to destination sign panels will not be added to the total area of panels.

Demountable Reflectorized Reference Location Signs with P-5 Post will be measured by the respective unit complete in place.

Demountable Reflectorized Delineators – Guardrail shall be measured by the unit, complete in place, with P-9 post or bracket.

Demountable Reflectorized Station Markers and Project Markers including P-9 Post will be measured by the unit complete in place.

Reflectorized Flexible Delineator Posts will be measured by the unit complete in place.

Delineation for Guardrail Termini with P-9 will be measured by the unit each post complete in place.

Each Street Name Sign shall be considered as one unit (excluding post). The P-5 breakaway post assembly for the sign shall be furnished under Item 847.1.

828.81: Basis of Payment

Payment for each classification of sign panels will be made at the contract unit price per square foot which shall be full compensation for fabricating, furnishing, erecting and attaching the completed sign panel, preparing all reflectorized materials. Backgrounds, legends, borders, arrows, shields,

paints, hardware and all other materials and labor required for the completion of the signs as specified.

Demountable Reflectorized Reference Location Signs with P-5 Post will be paid for at the contract unit price each complete in place.

Demountable Reflectorized Delineator - Guard Rail will be paid for under the contract unit price each complete in place.

Demountable Reflectorized Station Markers and Project Markers with P-9 Post shall be paid for at the contract unit price each complete in place.

Reflectorized Flexible Delineator Posts will be paid for under the contract unit price each complete in place.

Delineation for Guardrail Termini will be paid for at the contract unit price each complete in place.

Street Name Signs will be paid for at the contract unit price each complete in place.

828.82: Payment Items

828.1	Overhead Guide Sign - Aluminum Panel - (Type B)	Square Foot
829.	Roadside Guide Sign (G) - Aluminum Panel (Type B)	Square Foot
831.	Roadside Guide Sign (D6/D8) - Aluminum Panel (Type A)	Square Foot
832.	Warning – Regulatory and Route Marker - Aluminum Panel (Type A)	Square Foot
833.5	Demountable Reflectorized Delineator - Guard Rail	Each
833.7	Delineation for Guardrail Termini	Each
834.	Demountable Reflectorized Reference Location Sign	Each
834.17	Reflectorized Flexible Delineator Post (Amber)	Each
834.18	Reflectorized Flexible Delineator Post (White)	Each
836.	Demountable Reflectorized Project Marker	Each
836.5	Demountable Reflectorized Station Marker	Each
874.	Street Name Sign	Each

SUBSECTION 840: SIGN SUPPORTS

DESCRIPTION

840.20: General

The work to be done hereunder consists of the erection and fabrication of steel structural supports on 4,000 psi cement concrete foundations.

The Contractor may select any structural sign support system meeting the design criteria of the AASHTO *Standard Specifications for Structural Supports for Highway Signs, Luminaires and Traffic Signals*. Acceptance of the structural sign supports system will be contingent upon the review and approval of Shop Drawing submitted by the Contractor.

The foundations and supports for ground mounted signs shall be based on the plans and the standard drawings.

The design for overhead structures and foundations shall conform to the requirements of 828.21: Plans. Boring samples or actual determination of soil properties are required for all footings for overhead structures.

All unsuitable material within the limits of the footing must be removed at the direction of the Engineer. (Peat, organic material, material that has been dumped. etc.).

The concrete for the footing shall be placed immediately after excavation to prevent water from collecting in the excavated area.

All overhead and cantilever sign support structures shall be designed so as to be supported by single poles or end frames having not more than 2 vertical main members.

All overhead and cantilever sign structures shall have as an integral part of the structure, a Department approved damping device, which shall be installed during erection of the structure.

The damping devices shall be installed as follows:

- Overhead structures shall have the damping devices installed at the midpoint of the span (±1 ft), regardless of sign panel location.
- Two-chord structures shall have the damper attached to the top chord at mid-span.
- Tri-chord structures shall have the damper attached to the middle chord at mid-span.
- Box truss structures shall have the damper attached to the rear top chord at mid-span.
- Cantilever structures shall have the damper attached to the outer end of the horizontal member.

The approximate locations for the new signs are shown on the plans, the exact locations are to be determined by the Engineer on the project.

The Department will mark or stake the center point for each sign foundation only once whereupon it shall be the responsibility of the Contractor to furnish and set at their own expense all tie and construction stakes necessary for the erection of the sign.

All measurements to fabricate and erect the overhead sign structures and supports for ground mounted signs shall be made by the Contractor. Field measurements needed to determine the exact span and height of each structure should be taken immediately upon award of the Contract for incorporation in the structural layout on the shop drawings prior to submission for review.

The Contractor shall submit all design work, together with hand or computerized calculations and plans used for design purposes, to the Department; which shall become property of the Department with no additional compensation. All design work shall bear the seal of a Professional Engineer registered in Massachusetts.

Certificates of compliance shall conform to the requirements of Subsection 6.01: Source of Supply and Quality.

Before fabricating the sign support structures, the Contractor shall submit erection plans and shop drawings for approval of the Engineer.

Shop drawings shall be in accordance with 960.60: Shop Drawings and Subsection 5.02: Plans and Detail Drawings and include span lengths, post heights, vertical and horizontal clearances, material

specifications (grade and/or alloy), anchor bolt layout, and any other pertinent information. Provisions for cambering shall also be shown to ensure that horizontal cross beams will not deflect below the horizontal.

Erection procedures shall be in accordance with 960.61: Design, Fabrication and Erection.

A 4-in. x 6.5-in. handhole (minimum size) with frame and cover shall be installed in each overhead support structure post and positioned approximately 12 in. above the top of footing. The frames and covers shall be the same material as the posts. A removable cap with set screws shall be furnished on the top of each overhead support structure post.

All supports for ground mounted signs shall be of the "Breakaway" type. The design, fabrication and erection shall conform with the plans.

The work to be done hereunder shall include the furnishing and installation of Breakaway Post Assemblies for ground mounted signs, (not guide), in accordance with Department Standard Drawings and as shown on the plans.

This specification covers the use of standard, tapered, square, rectangular, round and special shape structural metals for sign supports.

Breakaway Sign Supports shall be designed and fabricated in conformance with plans titled "Standard Ground Mounted Supports Breakaway Design."

All vertical supports shall be erected plumb.

Both ends of each truss spanning a roadway shall be set at the same elevation.

Sign panels shall be mounted symmetrically about the horizontal truss or beam and provide a minimum vertical clearance above the roadway surface as shown on the plans.

MATERIALS

840.30: General

All materials shall be new and shall meet the requirements specified in the following Subsections of Division III, Materials:

4,000 psi Cement Concrete M4.02.00
Reinforcing Steel M8.01.0
Anchor Bolts M8.01.5
Sign Supports M8.18.3

All overhead and cantilevered support structures shall be in accordance with the requirements of Subsection 960: Structural Steel and Miscellaneous Metal Products.

FABRICATION

840.40: General

Welding shall conform to the applicable provisions of 960.61: Design, Fabrication and Erection.

No transverse welds will be permitted in the tubular shafts, except at the base plate and flange plate connections or where reinforcing sleeves are required. The shaft shall telescope the flange and the base plate and be welded by two continuous welds, one on the inside of the plate at the end of the shaft and the other on the outside surface of the plate. All welds shall develop the full strength of the section at the point of connection.

CONSTRUCTION METHODS

840.60: General

Work hereunder includes excavation, reinforcing steel, 4,000 psi cement concrete, anchor bolts, backfilling, grading and all other labor, material and equipment required to construct foundations conforming to the details shown on the plans and as directed.

Single pole foundation holes, except in ledge, shall be excavated by the auger method to the neat lines of the outside dimensions of the footings without disturbing the soil around or below the proposed footing.

In areas where rock or ledge is encountered the bottom of the footing shall be placed to the design depth shown on the typical detail plan. Concrete for footings where rock has been excavated, shall fill the entire volume of the excavation to the full depth of footing as designed.

Concrete foundations shall be poured monolithically to grade, except that where the foundation requires a spread footing it may be poured separately, and the pedestal then poured to grade. The lower portion of the footing may be poured separately, and the pedestal then poured to grade. The lower portion of the footing may be poured against the embankment, but the top 6 in. below finished grade shall be formed.

Anchor bolts shall be set to conform with the base-plate template as furnished in conformance with the typical detail plans.

The top of the foundation shall be properly finished and dressed to assure that full bearing will be provided on the leveling nuts which are to be set in concrete. All exposed edges shall have a ½-in. chamfer. Drain grooves shall be provided as shown on the typical plans.

Backfill for foundations, if required by the Engineer, shall be gravel borrow conforming to the requirements of M1.03.0: Gravel Borrow, except that no stone having any dimension greater than 1.25 in. shall be allowed.

The gravel shall be placed in layers not exceeding 6 in. in depth before compaction. Each layer of backfill shall be thoroughly compacted by use of power tampers to a minimum 95% density. All backfilling and compaction shall be in accordance with the applicable provisions of 150.64: Backfilling for Structures and Pipes.

P-5 posts may be either the square tube post or U channel type at the Contractor's option. Signs mounted with square tube posts shall be installed as follows:

Table 840.1: Sign Face Size Limitations for P-5 Square Tube Posts

Area (ft²)	Mounting with P-5 Square Tube Posts
≤7.5	Single 2.25-in. x 2.25-in. Post
>7.5 but ≤15	Two 2.25-in. x 2.25-in. Posts
>15 but ≤20	Two 2.5-in. x 2.5-in, Posts

Single post installation shall be in accordance with the Standard Drawing and Signs and Supports. Signs with two posts require a slip base and shall be installed as per manufacturer's recommendations except that the sign post anchor shall be embedded at least 4 ft below ground surface.

Signs mounted with U-channel posts shall be installed as follows:

Table 840.2: Sign Face Size Limitations for P-5 U-Channel Posts

Area (ft²)	Mounting with P-5 U-Channel Posts
≤10	Single Post
>10 but ≤200	Two Posts

Breakaway capabilities shall be maintained via the use of a lap splice or slip base system. Signs with two posts shall be installed as per manufacturer's specifications except that the sign post anchor shall be embedded at least 4 ft below ground surface.

Damage to the galvanized coating shall be repaired before erection with high zinc dust content paint meeting M7.04.11.

COMPENSATION

840.80: Method of Measurement

Payment items in the 841.* series, and payment items 845.1* through 848.1* will be measured by each.

Payment Items 840.1* and 844.1* will be measured by lump sum.

840.81: Basis of Payment

Payment items in the 840.* through 848.* series will be paid for at the contract unit price, which price shall be full compensation for design and construction of the completed structure including all excavation, gravel backfill and compaction. Rock excavation when encountered shall be paid under Class B Rock Excavation.

Breakaway P-5 Post Assembly, single or double, shall be considered as one unit.

840.82: Payment Items

840.1*	Support for Overhead Guide Sign (OD-*) – Steel	Lump Sum
841.1	Support for Guide Sign (D6 with D8 – 5-Inch Tubular Post) Steel	Each
841.2	Support for Guide Sign (D6 – 5 Inch Tubular Post) Steel	Each
841.3	Support for Guide Sign (D6 – P5 Posts) Steel	Each
841.4	Support for Guide Sign (D8 – 4 Inch Tubular Post) Steel	Each
841.5	Support for Guide Sign (D8 – P5 Posts) Steel	Each
841.6	Support for Guide Sign (I-2A – 5 Inch Tubular Post) Steel	Each
841.7	Support for Guide Sign (D6 with D8 – Special Design) Steel	Each
841.8	Support for Guide Sign (D6 – Special Design) Steel	Each
844.1*	Support for Guide Sign (G*) Steel Lump	Lump Sum
845.1	Support for Guide Sign (E5-1) Steel	Each
846.1	Supports for Guide Sign (E5-1A) Steel	Each
847.1	Sign Support (Not Guide) and Route Marker with 1 Breakaway Post Assembly – Steel	Each
848.1	Sign Support (Not Guide) and Route Marker with 2 Breakaway Post Assemblies – Steel	Each

* = as per Department Standard Nomenclature

SUBSECTION 850: TRAFFIC CONTROLS FOR CONSTRUCTION AND MAINTENANCE OPERATIONS

DESCRIPTION

850.20: General

Work under this Section consists of furnishing, installing and maintaining in proper operating condition various traffic control devices for the protection of the traveling public and working personnel during construction and maintenance operations. The design, application, and installation of all devices shall conform to MassDOT's "Standard Details and Drawings for the Development of Temporary Traffic Control Plans" and the MUTCD, and/or as directed.

The Contractor shall be responsible for the installation of adequate safety precautions for the protection of the traveling public and all project personnel.

All construction vehicles not protected by any form of traffic control device on a project which is open to traffic shall have an amber flashing light mounted on the cab roof or on the highest practical point of the machinery. The light shall be in operation whenever the equipment is working on the highway or travelway. Amber flashers must be a minimum of 40 cd and have a flashing frequency of 50 to 60 times per minute. Either rotating beacons or strobe lights meeting these requirements are acceptable.

All materials provided by the Contractor under the items of this section shall remain the property of the Contractor upon completion of the project.

All work under this Section shall conform to the approved Temporary Traffic Control Plan.

850.21: Roadway Flagger

The Contractor shall provide the number of flaggers required in either the approved TTCP or that the Engineer deems necessary for the direction and control of traffic within the site. A flagger shall be used as directed by the Engineer in accordance with 701 CMR 7.00, this section, and the TTCP. Any flagger determined by the Engineer to be ineffective in controlling traffic may be removed at the discretion of the Engineer. If a flagger is directed to be removed, the Contractor shall immediately comply with the directive from the Engineer and shall suspend operations as necessary until a qualified replacement can be provided. Such a suspension of operations shall not be considered as a basis for a claim or an extension of time.

MassDOT reserves the right to provide certified Roadway Flaggers or police officers, at the discretion of the Engineer.

850.22: Traffic Cones for Traffic Management

Traffic Cones for Traffic Management consists of furnishing, positioning, repositioning, maintaining and removing, as needed and/or as directed, traffic cones and necessary ballast for the purpose of closing a lane, shifting traffic, channelizing, or otherwise redirecting traffic.

850.23: Safety Signing for Traffic Management

Safety Signing for Traffic Management consists of furnishing, positioning, repositioning, covering and uncovering, maintaining and removing, as needed and/or as directed: regulatory, warning, and guide signs together with their supports. If additional supports are needed due to site conditions they will be considered incidental to the work.

Signs over 50 ft^2 will require approval of design calculations and shop drawings of the breakaway support system if the signs are installed at an unprotected location.

850.24: Temporary Pavement Markings and Temporary Raised Pavement Markers

Temporary Pavement Markings and Temporary Raised Pavement Markers consist of furnishing, applying, maintaining and removing temporary white and yellow reflectorized pavement markings and temporary raised pavement markers during construction and maintenance operations.

Temporary markings shall be effective for a period of 90 days. Re-application or replacement within the 90-day period shall be done at no additional cost to the Department.

850.25: Arrow Board

Arrow Board consists of providing, operating, positioning, repositioning, maintaining and removing a portable truck-mounted or trailer-mounted flashing arrow unit on the project at designated locations.

850.26: Reflectorized Drums

Reflectorized Drums consists of furnishing, positioning, repositioning, maintaining, and removing reflectorized plastic drums and necessary ballast, as needed and/or as directed by the Engineer.

850.27: Pavement Marking Removal and Raised Pavement Marker Removal

Pavement Marking Removal consists of removing existing pavement markings as required to support the Temporary Traffic Control Plan and as directed by the Engineer. Raised Pavement Marker Removal consists of removal and disposal of the existing raised pavement markers including filling the void.

850.29: Temporary Barrier and Temporary Barrier Removed and Reset

Temporary Barrier consists of furnishing, installing, maintaining and final removal of temporary barriers, including delineation, for traffic control or work zone protection in construction zones.

Temporary Barrier Removed and Reset consists of removing, transporting and resetting of temporary barrier units from alignments established along the roadway to new alignments as required by the construction and staged construction operations for the control of traffic or work zone protection.

850.31: Portable Breakaway Barricades Type III

Portable Breakaway Barricades Type III consists of furnishing, positioning, repositioning, maintaining and removing. Portable Breakaway Barricades Type III where indicated on the plans and/or as directed by the Engineer.

850.33: Portable Changeable Message Sign

Portable Changeable Message Sign consists of furnishing, positioning, repositioning, operating, maintaining, and removing a portable changeable message sign as needed and/or as directed by the Engineer. All messages displayed shall be approved by the Engineer prior to being displayed.

850.34: Truck Mounted Attenuator

Truck Mounted Attenuator consists of furnishing a moveable impact attenuator equipped with a flashing arrow board. The impact attenuator can be either a truck-mounted or a tow-behind unit.

850.35: Temporary Illumination

Temporary Illumination shall conform to the relevant provisions of Section 800: Traffic Control Devices, the Massachusetts Electrical Code and OSHA Safety Standards. The work consists of illuminating the work areas and lane drops on a temporary basis as designated by the Engineer. Lighting for paving and planning operations shall also conform to the requirements of Subsection 450: Hot Mix Asphalt Pavement.

All lighting equipment shall be approved by the Engineer prior to use. The Contractor shall submit to the Engineer a lighting plan for approval. No nighttime work shall be performed until the plan is approved by the Engineer. The lighting plan shall be prepared by a Professional Electrical Engineer and consist of the means and methods of the proposed lighting and contain supporting calculations.

MATERIALS

850.40: General

Devices required under this Section need not be new but must be in first class condition and acceptable to the Engineer. The condition of the work zone traffic control devices shall meet the

quality standards set forth in the Quality Standards for Work Zone Traffic Control Devices compiled by ATSSA. Any devices that, in the judgment of the Engineer, are unsatisfactory in appearance and/or performance shall be removed and immediately replaced by acceptable devices.

850.41: Roadway Flagger

Each flagger shall be equipped with the following high visibility clothing, signaling, and safety devices:

1. A white protective hard hat with a minimum level of reflectivity per the requirements of ANSI, Type I, Class E&G;
2. A clean, non-faded, non-torn lime/yellow reflective safety vest and safety pants meeting the requirements of ANSI 107 Class 3;
3. A 24 in. "STOP / SLOW" traffic paddle conforming to the requirements of Part 6E.03 of the MUTCD, a weighted, reflectorized red flag, flagger station advance warning signage, and two-way radios capable of providing clear communication within the work zone between flaggers, the Contractor, and the Engineer. The traffic paddle shall be mounted on a pole of sufficient length to be 7 ft above the ground as measured from the bottom of the paddle;
4. A working flashlight with a minimum of 15,000 candlepower and a 6-in. red attachable wand, a whistle with an attached lanyard, and a First Aid kit that complies with the requirements of ANSI Z308.1; and
5. An industrial/safety type portable air horn that complies with the requirements of the U.S. Coast Guard.

850.42: Traffic Cones for Traffic Management

Traffic cones shall meet the requirements of M9.30.11: Traffic Cones.

850.43: Safety Signing for Traffic Management

Rigid signs shall be fabricated from plywood, aluminum or approved alternate substrate material.

Plywood sign material shall be ⅝-in. Exterior MDO – General (one sided).

Aluminum sign material shall be Type A, 0.080 in. thick, as specified in 828.42: Panels.

The entire sign face shall be retro-reflectorized. Retroreflective sheeting shall conform to M9.30.0.

Rollup signs shall be fabricated from vinyl microprismatic retroreflective material.

Background sheeting for all construction warning signs shall be of a fluorescent orange color. The minimum spectral radiance factor, in accordance with Section 5.1 of ASTM E991, for the fluorescence shall be as follows:

New: .....110% minimum
Weathered: .....60% minimum

850.44: Temporary Pavement Markings and Temporary Raised Pavement Markers

Glass beads, tapes and paints used for temporary pavement markings shall be lead free, conform to M7.01.07, M7.01.16, M7.01.23 and M7.01.24 and meet the retroreflectivity requirements of the MUTCD for a period of 90 days. Final determination as to pavement marking quality shall be made by the Engineer. The Contractor shall supply a retroreflectometer for this purpose.

The colors of the marking materials shall be the standard highway colors of white or yellow and as outlined in the MUTCD.

Temporary Raised Pavement Markers shall conform to M9.30.6: Temporary Raised Pavement Markers.

850.45: Arrow Board

The unit shall consist of a black background panel meeting the requirements of MUTCD Type C and shall contain at least 15 amber lamps of approximately 8,000 initial maximum cd each.

Panels shall have the capability of the following mode selections:

(1) left or right flashing or sequential arrows;
(2) left or right sequential chevrons;
(3) flashing double arrow;
(4) flashing caution; and
(5) alternating diamond caution.

Panels shall automatically provide for a minimum of 50% dimming from their rated lamp voltage at night. The flashing rate of the lamps shall not be less than 25 or more than 40 flashes per minute.

Minimum mounting height should be 7 ft above the roadway to the bottom of the panel, except on vehicle-mounted panels, which should be as high as practicable.

850.46: Reflectorized Drums

Reflectorized drums shall conform to M9.30.9: Reflectorized Drum. Warning lights shall conform to the MUTCD Type A. All drums shall be maintained in a satisfactory manner including the removal of dirt and road film that causes a reduction in sheeting retroreflective efficiency.

850.49: Temporary Barrier

The Contractor shall use a temporary barrier system that is listed on the QTCE.

850.51: Portable Breakaway Barricades Type III

Portable Breakaway Barricades shall conform to the plans and the following requirements:

1. MUTCD.
2. Reflectorized sheeting conforming to M9.30.0: Retroreflective Sheeting, Type VIII. Pipe shall be Polyvinyl Chloride (PVC) pressure rated SDR 21 or SDR 26 ASTM D2241. Fittings may be PVC ASTM D2665 or Acrylonitrile Butadiene Styrene (ABS) ASTM D2661 (Drainage Waste and Vent).
3. The alternating 6 in. wide reflectorized diagonal stripe shall be orange and white and shall slope downward at 45° toward the end by which the traffic is to pass. Barricades that block the passage of traffic or designate the end of the traveled way shall have alternating vertical orange and white stripes on the rails.

850.53: Portable Changeable Message Sign

The Portable Changeable Message Sign shall be capable of performing all functions at ambient temperatures ranging from -31°F to 165°F. There shall be no degradation of operation due to fog, rain or snow.

Maintenance shall include periodic cleaning. When not being used the sign shall be stored in a secure area approved by the Engineer.

The Portable Changeable Message Sign shall consist of the following major components:

A. Message Sign.

1. Type: The technology can be LED or a combination of both Flip Disk and LED (Hybrid).
2. Matrix Displays: Shall be character, line or full matrix.
3. Size: The message sign shall have a minimum height of 6 ft, maximum height of 6.5 ft and a minimum width of 8 ft, maximum width of 12 ft.
4. Colors: The display shall be either fluorescent yellow or ITE amber.
5. Lines: The message sign shall have the capability of displaying at least three lines of 18 in. characters with a minimum of 8 characters per line.
6. The sign shall be illuminated for nighttime visibility.

B. Operator Interface.

A means of creating and controlling the display message(s) on–site and remotely through an NTCIP compatible IP addressable modem, shall be provided with each sign. The operator interface shall contain as a minimum the following:

1. Display terminal with keyboard to allow previewing the message content and format before it is sent to the sign panel. The keyboard shall be of a standard design.
2. Controller (CPU).
3. Lockable weatherproof enclosure for interface components.

C. Controller.

The controller shall possess, at a minimum, the following features:

1. Full 32K user memory with the option for additional archive memory.
2. Capacity to store a minimum of 50 messages.
3. Changeable message flash rate capability.
4. A minimum of 24-hour battery back-up.
5. Password activation shall be software available.

D. Power Supply.

The sign shall be capable of operation from a diesel-powered generator, a battery or solar power. The power supply shall be protected from the weather and be locked for security.

E. Trailer.

The trailer shall have at least the following features:

1. A current Registry of Motor Vehicles registration as per Subsection 7.04: Motor Vehicles.

2. Swivel jacks capable of leveling the trailer on a 1:6 (1 vertical to 6 horizontal) slope and capable of stabilizing the trailer in winds of up to 80 mph.
3. The sign shall be capable of being locked in a stowed position while being towed.
4. A lift mechanism shall be provided to elevate the sign to its operating position.
5. The capability to lock the sign panel in several off-angle positions with respect to the trailer axis.

850.54: Truck-Mounted Attenuator

Only those truck mounted attenuators previously approved for the purpose intended and listed on the QTCE may be used. Since most approvals are conditional, any associated issues including but not limited to anticipated conditions, model, variations, modifications, proper installation of truck-mounted units and tow-vehicle specifications shall be resolved to the satisfaction of the Engineer before use in the field. The submitted information shall include estimated displacement characteristics for a variety of impacts (assumptions regarding both impacting vehicle weight and speed) so that appropriate temporary traffic control set-ups can be undertaken in the field.

The flashing arrow board shall conform to the requirements of 850.45: Arrow Board.

850.55: Temporary Illumination for Work Zones

All floodlights shall have flat lenses securely fastened to the housing. All floodlight fixtures shall be mounted at a sufficient height to allow for an aiming angle of 45 degrees from the vertical to the job site. An inventory of spare lamps and fixtures shall be maintained on the job site and all lamp or fixture failures shall be repaired or replaced immediately.

Illumination Standards for Work Area

The entire work area shall be illuminated to a minimum average of 10 fc measured on a horizontal plane 6 in. above the work surface. A uniformity ratio (average to minimum) of 4 to 1 or better shall be maintained at all times in the work area. This shall apply to the work areas only. Any area where all phases of the work are completed need not be illuminated except for the safety and transition area lighting.

Illumination Standards for Transition Areas

The transition areas are the sections of roadway where road users are redirected out of their normal path.

The traveled way within these areas and all cones, drums, or other physical barriers placed on the roadway for the purpose of channelizing or restricting vehicular traffic shall be illuminated to a minimum average of 2 fc measured on a horizontal plane 6 in. above the roadway surface. A uniformity ratio (average to minimum) of 4 to 1 or better shall be maintained at all times in the transition area. These areas to be illuminated shall be defined as beginning at the first cone, barrel drum or other physical channelizing device, continuing across the full roadway width through the transition area, and ending where the traveled way attains a constant width.

Lighting Equipment Mounting

Mounting shall be designed and constructed by the contractor to suit the configuration of the equipment to which the lighting is attached.

Mounting shall be secure to prevent excessive vibration. Care shall be exercised to ensure that fixture mounting will clear all overhead structures.

All equipment lighting shall be aimed in such a manner as to maximize the illumination on each individual task.

All lighting units shall be placed in such a manner as to avoid shadows on the work area or the travel area and to prevent excessive glare to the motorist.

An inventory of spare lamps and spare fixtures shall be maintained on the job site by the contractor and all lamp or fixture failures shall be repaired or replaced immediately.

CONSTRUCTION METHODS

850.61: Roadway Flagger

Flaggers used during the performance of the Work shall be at least eighteen years of age. Flaggers used during the performance of the Work shall possess a current certificate of satisfactory completion from a Department-approved flagger training program within the previous two years.

Prior to the start of work, the Contractor shall provide to the Engineer a written list of certified flaggers to be used, including the most recent date of certification or re-certification for each person listed.

All flaggers shall carry their approved flagging training program certification card with them while performing flagging duties. Flagger certifications shall remain valid for the duration of the project or the flagger shall be removed from the project.

Flaggers shall have completed a First Aid training course according to the standards and guidelines of the American Heart Association or the American Red Cross. Flaggers shall carry their First Aid certification cards with them while performing flagging duties. First Aid certifications need not be renewed once the initial certification has expired.

850.62: Traffic Cones for Traffic Management

Traffic Cones shall be in good condition and sufficiently ballasted as determined by the Engineer. Any cones damaged by traffic shall be immediately replaced. The Contractor shall keep an adequate supply of spare cones on hand to replace any damaged cones.

The Contractor shall take steps to prevent cones from being blown over or displaced by wind or moving vehicular traffic. Cones shall not be left in position or on the highway when the construction operations have ceased. If it becomes necessary for the Department to remove any cones from the project due to negligence by the Contractor, all costs for this work will be charged to the Contractor.

850.63: Safety Signing for Traffic Management

Signs which are damaged or are missing from their locations shall be replaced by the Contractor without additional compensation except as described in Subsection 7.17: Traffic Accommodation.

All signs shall be maintained in a satisfactory manner including the removal of dirt or road film that causes a reduction in sign reflective efficiency.

All signs shall be mounted in compliance with the requirements of the MUTCD.

All signs not consistent with the use of the roadway shall be removed, completely covered, or turned away from traffic each day. In no case shall signs or their portable supports be left in the traveled way when the traffic management set-up has been removed.

Rollup signs shall only be used for single work shift setups.

850.64: Temporary Pavement Markings and Temporary Raised Pavement Markers

The Contractor shall install all necessary temporary pavement markings and temporary raised pavement markers, or both, prior to opening the roadway to traffic following the completion of each day's operations. Temporary raised pavement markers shall be supplemented with tape or painted markings to assure lane delineation. The Contractor shall make all necessary arrangements for this work beforehand so that it may be properly coordinated with construction operations. Temporary pavement markers and temporary raised pavement markers shall be installed in accordance with the requirements of the MUTCD.

850.65: Arrow Board

The arrow board shall be deployed as shown on the approved Temporary Traffic Control Plan or as directed. The unit shall be properly maintained throughout its use on the project.

850.66: Reflectorized Drums

Reflectorized drums are to be used as channeling devices in highway work zones. The first five drums used for any taper or as designated on the Temporary Traffic Control Plan shall be equipped with flashing lights.

850.67: Pavement Marking Removal

Existing pavement markings shall be removed to the fullest extent possible by an approved method. Pavement marking removal methods shall not cause damage to the pavement or cause drastic change in texture, which could be construed as delineation at night, and shall be approved by the Engineer. It is not permissible to paint over existing markings with black paint in lieu of removal. Approved methods include but are not limited to:

1. High pressure air.
2. High pressure water (cold weather use not permitted)
3. Sand blasting,
4. Mechanical devices such as grinders, sanders, scrapers, scarifiers and wire brushes.

Painting over a pavement marking line by use of asphaltic liquids or paints will not be permitted. Conflicting pavement markings shall be removed before any change is made in the traffic pattern.

Material deposited on the pavement as a result of removing markings shall be removed as the work progresses. Accumulations of sand or other material, which might interfere with drainage or could constitute a hazard to traffic, will not be permitted.

Any damage to the pavement or surfacing caused by pavement marking removal shall be satisfactorily repaired at no additional cost to the Department.

Where the removal operation is being performed near a lane occupied by traffic, a vacuum attachment operating concurrently with the removal operation must be in use. All residue shall be removed immediately from the surface being treated.

850.68: Raised Pavement Marker Removal

Existing raised pavement markers shall be removed by a method approved by the Engineer. Any damage to the pavement or surfacing caused by pavement marking removal shall be repaired at no additional cost by methods acceptable to the Engineer. Voids in the pavement shall be filled with like materials with adhesive bonding to the substrate.

850.69: Temporary Barrier and Temporary Barrier Removed and Reset

The Temporary Barrier shall be installed as shown on the plans, in accordance with these provisions and/or as directed by the Engineer.

Each run of temporary barrier units shall be fastened together to form a continuous chain.

Temporary impact attenuators with delineation shall be installed at ends of barriers within 30 ft of approaching traffic. The Contractor shall not leave a barrier leading-end unprotected.

Delineators shall be installed in conformance with manufacturer's recommendations on the barriers at their termini; at 20-ft intervals on tangent sections; and 10-ft intervals on curved sections depending on radius as determined by the Engineer.

Delineators mounted on top of barriers separating opposing traffic shall have two sided amber reflectors delineating the left edge. Side mounted delineators shall have amber delineating the left edge, white delineating the right edge and have red as the back color. If mounted on the sides they shall be 6 in. below the top and on the side of traffic. Delineators shall be mounted at angles that provide maximum reflectorization.

Temporary Barriers shall be removed from existing locations and reset in accordance with above requirements, as directed by the Engineer.

850.71: Portable Breakaway Barricades Type III

The Contractor shall furnish, set up, move and remove Portable Breakaway Barricades Type III as required or directed by the Engineer. Portable Breakaway Barricades Type III shall be maintained in a good and serviceable condition throughout the project and shall be moved from place to place as required during construction and as directed by the Engineer.

850.73: Portable Changeable Message Sign

The changeable message unit shall be available for immediate use throughout the duration of the project and be positioned in accordance with the Temporary Traffic Control Plan and/or at the direction of the Engineer. The sign shall be visible from a minimum distance of 900 ft with a viewing angle of no less than 30°. The Contractor shall take appropriate measures as needed within the roadway layout to provide the required minimum sight distance. The Contractor shall be responsible for the maintenance of each device and appurtenance. If the unit is found to be defective in any way it shall be replaced immediately at the Contractor's expense.

850.74: Truck-Mounted Attenuator

The truck-mounted attenuator shall be utilized as shown on the plans or as directed by the Engineer, at the proper orientation and height above the paved surface.

A damaged truck-mounted attenuator shall not be used. Any repairs to the attenuator shall be accompanied by a statement from the product manufacturer certifying the repairs that were performed. Any work that becomes delayed due to the lack of a properly functioning truck-mounted attenuator will not constitute justification for an extension of time.

850.75: Temporary Illumination

All portable lighting shall be located off the travel way. Whenever possible the lighting shall be located on the side of the road opposite the closed lanes.

The Contractor shall provide power to adequately energize the lighting equipment specified. Generator placement and wiring shall be in compliance with the Massachusetts Electrical Code and OSHA safety standards.

The Contractor shall furnish to the Engineer a Multi-function digital luminance meter, complete with instructions and capable of measuring from 0.01 to 200 fc. The illumination on the project shall be monitored at random intervals for conformance to the specifications set forth herein. Substandard illumination shall be sufficient reason for the Engineer to stop all affected work until the substandard situation is corrected.

COMPENSATION

850.80: Method of Measurement

Construction Vehicle Warning Devices and Personal Protective Safety Equipment shall be incidental to the work of the Contract and shall not be measured for payment.

Roadway Flagger will be measured on an hourly basis for only the actual time spent flagging. Partial hours shall be measured in 0.5-hour increments rounded up to the next 0.5 hours if a portion of that 0.5 hours is worked.

Traffic Cones for Traffic Management will be measured by the day. Traffic Cones for Traffic Management will be measured for payment only when 50 or more cones are used together in a string, spaced in accordance with the Traffic Control Plan and the MUTCD, for the purpose of closing a traffic lane, shifting traffic, channelizing, or otherwise redirecting traffic. The use of less than 50 cones in a string shall be incidental to the work with no additional compensation. Other uses of traffic cones shall be incidental to the work activity with which the cones are associated. Each period of up to 24 hours during which Traffic Cones for Traffic Management are in place will be measured as 1 day, regardless of the number of times that the cones are positioned, repositioned, removed or returned to service and regardless of the number of locations at which traffic cones are used. Ballast to weight the cones shall be incidental to the work with no additional compensation.

Safety Signing for Traffic Management will be measured by the square foot and the quantity will be only that which is actually used on the project. Regardless of the number of times that a sign may be reused on the project, it will not be measured for payment more than once.

Temporary Pavement Markings will be measured by the foot using the procedure outlined for Permanent Pavement Markings in 860.80: Method of Measurement.

Temporary Raised Pavement Markers will be measured by the unit each.

Arrow Board will be measured by the day. Each period of up to 24 hours during which an arrow board is in use will be measured as one day, regardless of the number of times that the unit is positioned, repositioned, removed or returned to service.

Reflectorized Drums will be measured by the day. Each period of up to 24 hours during which a reflectorized drum is in use will be measured as one day regardless of the number of times that the drum is positioned, repositioned, removed or returned to service.

Pavement Marking Removal will be measured by the square foot of existing pavement marking actually removed.

Raised Pavement Marker Removal will be measured by the unit each.

Temporary Barrier and Temporary Barrier Removed and Reset will be measured by the foot, in place. Barrier removed and reset for the purpose of gaining access to the construction work zone shall not be measured for payment. Any barrier removed and reset for the convenience of the Contractor will not be measured for payment.

Portable Breakaway Barricade Type III will be measured as one unit each regardless of size.

Portable Changeable Message Signs will be measured by the day. Each period of up to 24 hours during which a Portable Changeable Message Sign is in place will be measured as one day, regardless of the number of times that the sign is positioned or repositioned, removed or returned to service.

Truck-Mounted Attenuator will be measured by the day which shall include the attenuator, the truck or tow vehicle, the operator or driver, maintenance of the vehicle and components, and arrow board. Each period of up to 24 hours during which a Truck-Mounted Attenuator is in place will be measured as one day, regardless of the number of times that the Truck Mounted Attenuator is positioned, repositioned, removed or returned to service during that period. In either case, the unit and the accompanying truck are considered one unit for measurement and payment purposes.

Temporary Illumination for Work Zone will be measured by the day for each period of up to 24 hours during which temporary illumination is used, regardless of the number of operations requiring lighting, or the number of times that the illumination is positioned, repositioned, removed or returned to service.

850.81: Basis of Payment

The contract prices under these items shall constitute full payment for all material, labor and equipment required or incidental to the satisfactory completion of the work as described above. Any devices provided under this section which are lost, stolen, destroyed or deemed unacceptable while their use is required on the project shall be replaced without additional compensation. Devices damaged by traffic will be compensated in accordance with Subsection 7.17: Traffic Accommodation including temporary impact attenuators. This shall not include other temporary traffic control devices, such as cones, drums and temporary signs.

Roadway Flagger will be paid for at the contract unit price per hour which shall include full compensation for all costs for providing flaggers. No allowance or additional payment will be made for required training, equipment, travel time, transportation, or any administrative charges associated with the costs of flaggers. No allowance shall be made for overtime payment rates. The Contractor shall not be charged nor compensated for the use of MassDOT employee flaggers. This item shall not be subject to renegotiation for any reason under Subsection 4.06: Increased or Decreased Contract Quantities regardless of whether or not this item overruns or underruns.

Traffic Cones for Traffic Management will be paid for at the contract unit price per day which shall provide full compensation for furnishing, positioning, repositioning, and removing traffic cones as directed by the Engineer. A day shall cover all traffic cones for traffic management necessary in that time period, regardless of the total number of cones and regardless of the number of locations at which cones are used. The Contractor will receive the day payment for the period in which the Traffic Cones for Traffic Management are deployed. Safety Signing for Traffic Management will be paid for at the contract unit price per square foot which shall include full compensation for furnishing, installing, maintaining, positioning, repositioning, and removing the signs.

Temporary Pavement Markings will be paid for at the contract unit price per foot which shall include full compensation for furnishing, installing, maintaining and removing, the markings and markers.

Temporary Raised Pavement Markers will be paid for at the contract unit price each which shall include full compensation for furnishing, installing, maintaining and removing, the markings and markers.

Arrow Boards will be paid for at the contract unit price per day which shall include full compensation for furnishing, positioning, repositioning, and removing Arrow Boards as directed by the Engineer.

Reflectorized Drums will be paid for at the contract unit price per day which shall include full compensation for furnishing, positioning, repositioning, and removing Reflectorized Drums as directed by the Engineer. Flashing lights as shown on the Temporary Traffic Control Plan shall be considered incidental to Item 859. Reflectorized Drum.

Pavement Marking Removal will be paid for at the contract unit price per square foot which shall provide full compensation for removing existing markings including any necessary repairs to the roadway surface.

Raised Pavement Markers Removal will be paid for at the contract unit price each which shall provide full compensation for removing the existing markers and filling the voids in the pavement.

Temporary Barrier will be paid for at the contract unit price per foot which shall provide full compensation for furnishing, installing, delineating, aligning, maintaining and final removal of the temporary barrier.

Temporary Barrier Removed and Reset will be paid for at the contract unit price per foot which shall provide full compensation for removing, relocating, re-setting, re-aligning, transporting and maintaining the temporary barrier including delineation, as specified above. The Contractor will be paid Removed and Reset each time the barrier is relocated either to a new work zone, to off-season storage, or back to the project from storage. The Contractor will not be separately compensated for

any work necessary to maintain or re-align units or replace damaged units. No payment will be made for removing and resetting barriers for the purpose of gaining access to the construction work zone. No payment will be made for removing, relocating and resetting any barriers moved for the convenience of the contractor.

Portable Breakaway Barricades Type III will be paid for at the contract unit price each which shall provide full compensation for all material, labor and equipment necessary to furnish, install, maintain, move and remove the barricades.

Gravel Borrow for any foundation and anchorage work for Temporary Impact Attenuators will be paid for at the contract unit price under Item 151. Gravel Borrow.

Portable Changeable Message Signs will be paid for at the contract unit price per day which shall provide full compensation for furnishing, positioning, repositioning, and removing Portable Changeable Message Signs as specified or as directed by the Engineer.

Truck Mounted Attenuator will be paid for at the contract unit price per day which shall provide full compensation for positioning, repositioning, removing or returning to service as required or as directed by the Engineer. The Contractor will receive the day payment for each continuous work period in which the Truck Mounted Attenuator is deployed.

Temporary Illumination for Work Zone will be paid for at the contract unit price per day which shall provide full compensation for all lighting specified for use in lane drops, work areas, and other lighting locations as directed by the Engineer. The work includes the lighting plan, delivery, removal, setting and resetting of all floodlighting equipment, staging or tripods, generators, wiring, the light meter, adjustment, maintenance and any equipment necessary or incidental to the operation of a lighting system.

850.82: Payment Items

850.41	Roadway Flagger	Hour
851.1	Traffic Cones for Traffic Management	Day
852.	Safety Signing for Traffic Management Square	Foot
853.1	Portable Breakaway Barricade Type III	Each
853.2	Temporary Barrier (TL-2)	Foot
853.21	Temporary Barrier Removed and Reset	Foot
853.403	Truck Mounted Attenuator	Day
853.8	Temporary Illumination for Work Zone	Day
854.	Temporary Raised Pavement Marker	Each
854.016	Temporary Pavement Markings – 6-inch (Painted)	Foot
854.036	Temporary Pavement Markings – 6-inch (Tape)	Foot
854.1	Pavement Marking Removal Square	Foot
854.5	Raised Pavement Marker Removal	Each
856.	Arrow Board	Day
856.12	Portable Changeable Message Sign	Day
859.	Reflectorized Drum	Day

SUBSECTION 860: REFLECTORIZED PAVEMENT MARKINGS

DESCRIPTION

860.20: General

This item of work consists of furnishing materials and the application of Reflectorized Pavement Markings in accordance with the MUTCD.

MATERIALS

860.40: General

Materials shall be as specified under the particular payment item being used and shall meet the appropriate requirements specified in the following Subsections of Division III, Materials:

General Requirements for Paints and Protective Coatings M7.00.00
Liquid Thermoplastic Striping Material M7.01.3
White Traffic Paint M7.01.05
Yellow Traffic Paint M7.01.06
Glass Beads M7.01.07
White High Heat Rapid Drying Traffic Marking Material M7.01.08
Yellow High Heat Rapid Drying Traffic Marking Material M7.01.09
Fast Drying White Traffic Paint M7.01.10
Fast Drying Yellow Traffic Paint M7.01.11
Striping Powder M7.01.12
Preformed Permanent Plastic Pavement Markings or Legends M7.01.18
Green Pavement Coatings M7.01.21
Fast Drying White Water-borne Traffic Paint M7.01.23
Fast Drying Yellow Water-borne Traffic Paint M7.01.24

CONSTRUCTION METHODS

860.60: Equipment

All equipment used for the application of pavement markings shall be approved by the Engineer and shall be of standard commercial manufacture. All equipment and devices necessary for the protection of the pavement marking and the traveling public shall be approved by the Engineer. The pavement marking equipment shall be operated in accordance with the manufacturer's recommendations.

Truck mounted equipment shall be used for the application of pavement markings except in such cases where in the Engineer's judgment travel will be unreasonably delayed and/or the quality of the work performed by the machine is unsatisfactory.

The Contractor shall supply the following equipment for each pavement marking operation:

1. An infrared pistol thermometer meeting the requirements of 450.42: Weather Limitations;
2. A digital thickness gauge for measuring the thickness of thermoplastic lines;
3. A wet film thickness gauges for painted lines; and
4. A retroreflectometer with certification of calibration within the last 6 months.

The above equipment shall remain the property of the Contractor upon completion of the project.

860.61: Layout of Work

A schedule of pavement marking operations shall be furnished by the Contractor for the approval of the Engineer prior to the application of any pavement markings. This schedule must be in the office of the Engineer 7 days prior to the proposed date of application of any pavement markings.

The Engineer will provide at a convenient location on the roadway a line of reference for use by the Contractor in establishing the location of markings. The line of reference shall be at a maximum of 50-ft intervals by means deemed satisfactory by the Engineer. All markings shall follow the line of reference without deviation. Any line deviating from the establishing control of incorrect width shall be reapplied, as directed by the Engineer in accordance with 860.62: Application of Markings.

860.62: Application of Markings

Pavement markings shall be applied as follows:

Table 860.62-1: Pavement Marking Application Requirements

Material	Application Temperature	Line Thickness Above Roadway Surface	Glass Bead Application
M7.01.03	400°F to 425°F	125 to 188 mils	Drop-on 1 lb per 10 ft²
M7.01.23	135°F to 150°F	15 mils	6 lb per gal
M7.01.24	135°F to 150°F	15 mils	6 lb per gal

Line thickness above the roadway surface shall meet the minimum requirements regardless of the type of surface on which it is applied.

No thinners shall be used for the above listed pavement marking applications except in accordance with the manufacturer's specifications and at the direction of the Engineer.

No paint or pavement marking material shall be heated above the temperature marked on the container.

Glass beads for water-borne traffic paint and thermoplastic pavement markings shall be applied by the single drop method using AASHTO M 247 Type 1 glass beads sprayed or dropped on pavement marking material.

Glass beads for epoxy and polyurea pavement markings shall be both standard gradation beads and large gradation beads. Standard gradation beads shall be applied by the double drop method. Large gradation beads shall be injected into or dropped onto the liquid pavement marking material. Large gradation beads shall be applied first, immediately followed by standard gradation beads. The beads shall adhere to the cured pavement marking material or all pavement marking operations shall cease until corrections are made.

Markings shall be applied only in seasonable weather and in accordance with good painting practices. The surface shall be dry and free of sand, grease, oil or other foreign substances prior to the application. The Contractor shall prepare the surface to accept the application as part of this item, with no additional compensation. The Engineer will make the final determination for all of the foregoing.

HMA pavements shall have been in place for 48 hours prior to the application of pavement markings except preformed permanent plastic pavement markings which can be applied immediately. When it is necessary to expedite the flow of traffic, the Engineer may reduce the waiting period as is deemed necessary.

If for any reason material is spilled or tracked on the highway, or any markings applied by the Contractor, in the Engineer's judgment, fail to conform to 860.61: Layout of Work, because of a deviation from the desired pattern, the Contractor shall remove such material by a method that is not injurious to the roadway surface and is acceptable to the Engineer, clean the roadway surface and prepare the surface for a reapplication of markings and reapply the markings as directed without additional compensation for any of the foregoing corrective operations.

The ambient (air) temperature for thermoplastic application is to be a minimum of 45°F and rising at the time of marking operations. If work has started and air temperatures fall below 45°F and continuous cooling is indicated, work shall be stopped. In cool weather conditions, temporary drops down to 40°F will be tolerated, providing temperatures also vary upwards. Sustained striping (greater than one hour) at 40°F shall not be allowed. Starting work at air temperatures lower than 45°F shall not be allowed.

860.63: Protection of Markings

Markings shall remain protected until sufficiently dry to bear traffic on highways that are open to traffic. Markings shall be protected by traffic cones conforming to Subsection 850: Traffic Controls for Construction and Maintenance Operations, except in the case of markings which cure to a no track condition in 180 seconds or less in the latter case protection may be provided by a convoy of vehicles with suitable warning devices to warn overtaking or oncoming traffic that the pavement marking operation is in progress.

A. Broken Lines.

On tangents and on curves of 1,000-ft radius or greater, at least one cone shall be placed on every other bar. On curves of less than 1,000-ft radius, one cone shall be placed on every bar

B. Solid Lines.

On tangents and on curves of 1,000-ft radius or greater, cones shall be spaced not over 80 ft apart and on curves of less than 1,000-ft radius the spacing shall be not over 50 ft. On edge line adjacent to the median wider spacing may be used at the direction of the Engineer. In order to control the proper positioning of the cones during the drying period, the Contractor shall assign sufficient personnel as determined by the Engineer. Such control is dependent on traffic density, cone widths, etc.

860.64: Accommodation of Traffic

All traffic control devices required for pavement marking installation or protection of markings shall be in accordance with Subsection 850: Traffic Controls for Construction and Maintenance Operations.

Lane closures, shifts, or other temporary traffic control setups to accommodate pavement marking operations shall be approved by the Engineer.

860.65: Recessed Markings

Prior to cutting out the grooves for recessed markings, the Contractor shall layout the proposed pavement markings per 860.61: Layout of Work. Once the Engineer has inspected and approved the proposed striping layout, the grooves for the proposed pavement markings may be cut. No pavement grooving shall be done without the prior approval of the Engineer.

Groove position shall be a minimum of 4 in. from the edge of the pavement marking to any longitudinal pavement joints. The groove shall not be installed on bridge joints, on drainage structures, or in other areas identified by the Engineer. The groove shall not be installed continuously for intermittent pavement markings, but only where markings are to be applied.

The use of gang stacked diamond cutting blades to grind a smooth square slot is required for producing all grooves. The spacers between blade cuts shall be such that there will be less than a 10 mil rise in the finished groove between the blades. The acceptability of the surface texture will be determined by the Engineer.

The diamond grinder shall have an articulating head so that the slots are installed correctly on grades and super elevated sections.

Grooves that are ground deeper or wider than the specified allowable limits shall be repaired per the direction of the Engineer at no additional cost. Grooves that are ground too shallow, too narrow, or with unacceptable rises between blade cuts shall be reground to the correct size, depth, and surface finished at no additional cost. Slots ground out of alignment shall be patched using an approved method and materials.

Grooves shall be 1 in. ±¼ in. wider than the pavement marking width. Groove depth is dependent upon pavement marking material type and shall be per Table 860.65-1.

Table 860.65-1: Groove Depth for Recessed Pavement Markings

Pavement Marking Material Type	Groove Depth
Multi-Component (i.e., Epoxy, Polyurea, Urethane)	80 mil
Preformed	150 mil
Thermoplastic	Proposed wet thickness of line + 40 mil
Water-borne Paint	80 mil

The Contractor may propose an alternate groove depth based upon recommendations of the pavement marking material manufacturer. An alternate depth shall be approved by the Engineer prior to installation.

Groove depth shall be consistent across the full width of the groove. Depth plates shall be provided by the Contractor to the Engineer to assure that the specified groove depth is achieved.

Grooves shall be clean, dry and free of laitance, oil, dirt, grease, paint or other foreign contaminants. Shrouds and a vacuum apparatus shall be included as part of the grinder to remove larger pieces of pavement that are ground out. If water is used to clean the groove or the grooving process takes place during rainfall, a minimum of 24 hours of dry time is required prior to the placement of pavement markings. The grooves shall be dry for 24 hour prior to placement of the pavement markings.

After the depth, width, length, and surface condition has been approved by the Engineer, an air lance shall be used to remove fine particles from the groove. Air compressors shall initially be blown out away from the application area to prevent compressor condensation build-up from entering the groove. The Contractor shall prevent traffic from traversing the grooves per 860.63: Protection of Markings and re-clean grooves, as necessary, prior to application of pavement markings at no additional cost.

All grooves must be approved by the Engineer prior to the placement of pavement markings.

COMPENSATION

860.80: Method of Measurement

Markings are to be paid for on the actual length of lines applied under the various items of the Contract.

The lengths of solid lines will be obtained by:

1. Calculation from established base line stations; or
2. Use of a measuring wheel; or
3. Vehicle odometer readings.

The length of broken lines (except for broken lines less than 10 ft, the actual length shall be used) will be obtained by using 25% of the results obtained above for solid lines. Patterns, other than lines, are to be paid for by the square foot area under the item in the Contract.

860.81: Basis of Payment

The work under these items will be paid for at the contract unit price under each item of the Contract based on the measurements as determined by the Engineer.

The contract prices shall include all material, labor, and equipment required or incidental to the satisfactory completion of the work.

860.82: Payment Items

860.106	6-Inch Reflectorized White Line (Painted)	Foot
860.112	12-Inch Reflectorized White Line (Painted)	Foot
861.106	6-Inch Reflectorized Yellow Line (Painted)	Foot
861.112	12-Inch Reflectorized Yellow Line (Painted)	Foot
864.	Pavement Arrow Reflectorized White (Painted)	Square Foot
864.01	Pavement Arrow and Legends Reflectorized White - Inlay Tape	Square Foot
864.02	Pavement Arrow and Legends – Tape	Square Foot
864.04	Pavement Arrows and Legends Reflectorized White (Thermoplastic)	Square Foot
866.106	6-Inch Reflectorized White Line (Thermoplastic)	Foot
866.112	12-Inch Reflectorized White Line (Thermoplastic)	Foot
867.106	6-Inch Reflectorized Yellow Line (Thermoplastic)	Foot
867.112	12-Inch Reflectorized Yellow Line (Thermoplastic)	Foot

SUBSECTION 871: NON-MOTORIZED TRAFFIC DATA COLLECTION

DESCRIPTION

871.20: General

This work shall include the installation and calibration of permanent or portable non-motorized traffic counting stations (NTCS) used to collect pedestrian and/or bicycle volume and volume-related data. The devices shall be installed at the locations shown on the plans.

All data collected by the devices shall become property of the Department. There shall be no reoccurring or ongoing fees associated with accessing, retrieving, or collecting data once the device has been installed.

MATERIALS

871.40: General

Materials shall meet the requirements specified in the following Subsections of Division III, Materials and as otherwise specified herein.

Electrical Conduit-Flexible Metallic (Type FM) M5.07.2
Shielded Loop Detector Lead-In Cable M8.16.11
Type 13 Loop Detector Wire THHN with Tube M8.16.13
Non-motorized Traffic Counting Stations (NTCS) M9.31.0

NTCS shall use detection technologies such as loop detectors, piezoelectric sensors, infrared, video, microwave, radar, or a combination thereof to count pedestrians and/or bicyclists passing through one or more defined detection zones.

NTCS shall be prequalified on the QTCE.

NTCS components shall be weather-hardened, suitable for outdoor use, and vandal-proof. All enclosures shall be NEMA rated.

NTCS that require independent mounting structures and/or foundations shall have those costs included in the bid price. All permanent structures shall be designed for wind loading of 90 mph per *AASHTO Standard Specifications for Structural Supports for Highway Signs, Luminaires, and Traffic Signals*. Mounting to existing, Department-owned structures will require approval by the Engineer. No NTCS components may be installed on utility poles without prior authorization from both the utility owner and the Engineer.

The Contractor shall submit Shop Drawings for all materials a minimum of 60 days in advance of installation. The Contractor shall not proceed with installation prior to receipt of Shop Drawing approval.

871.41: Portable Devices

Items classified as Portable will be deployed by the Contractor for a period of time specified in the Contract and then removed. Portable NTCS shall remain the property of the Contractor at the completion of the deployment. However, all data collected during the deployment shall be the property of the Department, per 871.20: General.

Portable NTCS device memory shall have the capability of storing a minimum of 30 days of count data. If the collected data is automatically retrieved and stored on a non-Department server, access and retrieval of that data shall be provided at no additional cost for a minimum of 1 year after collection.

The Contractor shall maintain the batteries during deployment in a manner that minimizes disruption to data collection.

871.42: Permanent Devices

Items classified as Permanent shall be installed by the Contractor and become property of the Department upon acceptance.

Permanent NTCS device memory shall have the capability of storing a minimum of 90 days of count data. If the collected data is automatically retrieved and stored on a non-Department server, access and retrieval of that data shall be provided at no additional cost for a minimum of 5 years after collection.

If a solar-powered device is proposed, the Contractor shall include solar calculations for the proposed installation as part of the Shop Drawing review.

If a traffic signal cabinet is to be used to provide power for a Permanent NTCS for Intersections, all work within such a cabinet must be preapproved and may only be performed in the presence of the Engineer. All additional wiring, components, materials, and labor required shall be considered incidental to the unit price.

871.43: Data Access, Connectivity, and Security

NTCS shall allow data retrieval and configuration in the field via Wi-Fi or Bluetooth® enabled communication.

Permanent NTCS shall allow remote data retrieval using via a built-in or external 4G LTE or 5G cellular modem. The cellular modem shall include a 10-year connectivity and service agreement that, at a minimum, includes:

- Cellular connectivity for the duration of the agreement that is paid for as a single, up-front cost by the Contractor and reflected in the unit price of the NTCS and has no cellular overage charges.
- Extended warranty on the hardware for the duration of the agreement.
- Telephone and email support.
- Over-the-air software and security updates.

The cellular modem and connectivity and service agreement may be omitted if the following are all met:

- The NTCS can operate with a wired internet connection and there is no degradation in data quality or features if a cellular modem is not used.
- A Department-owned high-speed internet connection will be installed under a separate pay item or an existing Department-owned high-speed internet connection has been identified in the plans as acceptable for use with the NTCS.

- Any costs related to integrating the NTCS with the high-speed internet connection including, but not limited to wiring, adaptors, and security features are considered incidental.
- All work integration work performed with an existing Department-owned high-speed internet connection is done in the presence of the Engineer.

For any point-to-point Wi-Fi access points, the following security protocols shall be met:

- All Wi-Fi access points and remote clients shall be configured to use 256-bit Wired Equivalent Privacy (WEP) Encryption or greater for all links between units.
- The Contractor shall disable all Service Set Identifier (SSID) broadcasts.
- The Contractor shall disable "guest mode."
- The Contractor shall disable wireless firmware upgrade mode.
- All Wi-Fi access points shall be set to use only defined connection points; the use of auto connection shall not be allowed.
- The Contractor shall disable FTP file sharing on all Wi-Fi access points and remote clients.

The Contractor shall reconfigure all default passwords on all supplied devices, including software, to custom, unique complex alpha numeric passwords comprised of special symbols, uppercase and lowercase letters, and numbers that are a minimum of 8 characters in length. The Contractor shall generate a complete list of all proposed passwords. That list shall be submitted to the Engineer for approval. No manufacture default or duplicate passwords shall be allowed.

871.44: Pull Boxes, Posts, and Enclosures

All NTCS sensors and necessary components shall be integrated into a waterproof and vandal-proof enclosure. The enclosure may either be mounted to a post or constructed in the form of a pillar or post. If the enclosure is constructed in the form of a pillar or post, it shall be no more than 48 in. tall and have a maximum width of no more than 8 in.

Pull boxes, if required, shall be considered incidental to the cost of the NTCS.

Materials and dimensions of all posts, enclosures, and foundations, if required, shall be included with the Shop Drawings submittal.

CONSTRUCTION METHODS

871.60: General

All work shall be in accordance with the manufacturer's instructions. All electrical work including, but not limited to, conduit installation, service connections, and wiring shall be in conformance with the MEC.

The Contractor shall install and configure the NTCS as per the manufacturer's specifications. Any conflicts between the manufacturer's specifications and Subsection 871: Non-Motorized Traffic Data Collection shall be resolved in writing prior to the start of construction.

NTCS shall be installed at the location of the detection zone shown on the plans. The Contractor shall verify the location in the field with the Engineer prior to installation.

All components associated with the installation of NTCS shall be installed in a location that does not inhibit the movement of pedestrians along an accessible route, nor impede the passage of bicycles

or motor vehicles. At the completion of installation, the pedestrian route past the sensor(s) shall remain fully ADA and MAAB compliant.

Access to a traffic signal cabinet, if required, must be preapproved by the Engineer. Work within such cabinets may only be performed by a Prequalified Contractor and in the presence of the Engineer.

It shall be the responsibility of the Contractor to determine methods to secure Portable NTCS during deployment to reduce the likelihood of theft or vandalism. Any such methods shall be approved by the Engineer prior to deployment. Upon the end of the deployment period for Portable NTCS, the site shall be restored to its original condition.

871.61: Inductive Loop Detectors and Piezoelectric Sensors

Any manufacturer's specifications for inductive loop detector or piezoelectric sensor installation that differ from the requirements listed in this construction specification shall take precedence.

Inductive loop detectors and piezoelectric sensors, if required as a component of the NTCS, shall be installed at the location of the detection zone shown on the plans. Minor adjustment in location to avoid castings, expansion joints in cement concrete, utilities, uneven pavement, or other obstructions will be allowed. The Contractor shall mark the exact location of the detector(s) or sensor(s) for approval by the Engineer prior to installation.

A. Saw Cuts.

A saw equipped with a diamond blade shall be used to cut the slots in the pavement. The saw must be equipped with a depth gauge and horizontal guide to assure proper depth and alignment of the slot. The diamond blades to be utilized for the saw cut shall provide a clean, well-defined saw cut without damage to adjacent areas. All saw cuts connecting the loop detectors or piezoelectric sensors with the edge of pavement must be separated by at least 1 ft to prevent pavement damage.

The saw cut for inductive loop detectors shall be $^{5}/_{16}$ in. wide and 2 in. deep, or as directed by the engineer. A 1¼ in. diameter hole shall be drilled at each intersecting sawcut or lead in angle point to prevent sharp bends in the cable. All cuts and drilled holes shall be to the full 2 in. depth.

The saw cut for piezoelectric sensors shall be ¾ in. wide and 1 in. deep using a single blade in one pass. The saw cut shall be 8 in. (4 in. on each side) longer than the sensor length, and the depth of the saw cut shall be ½ in. deeper at both ends.

All saw cuts shall be flushed with clean water to remove the saw slurry and filtered compressed air shall be used to remove all dust and moisture from the slot. Sand or other moisture absorbing materials shall not be used in the slot. Installation of the loop cable or piezoelectric sensor in the slots may not take place until the slot is clean and completely dry.

The installation brackets for piezoelectric sensors shall be placed every 6 in.

B. Conduits and Wiring.

A PVC-coated Type FM conduit shall be installed between the pavement and the NTCS post base or pull box. The conduit shall be installed at a minimum depth of 6 in. below the ground and pavement surfaces.

For loop detectors, Type 13 Loop Detector Wire shall be installed starting at the NTCS post base or pull box, around the cut loop the specified number of times, then back to the NTCS post base or pull box. The wire shall be placed in the saw cuts with no kinks or curls and no stretching of the insulation. The wire shall be pushed as deep into the slot as possible with the use of a dull or blunt-faced tool; screwdrivers or other sharp tools that could damage the wire shall be prohibited. Wire damaged during installation shall be removed and replaced at no additional cost.

There shall be no splices anywhere in these wire runs except between Type 13 Loop Detector Wire and Shielded Loop Detector Lead-In Cable. This splice shall only be made in the NTCS post base or in a pull box. Splices shall only be moisture preventing, epoxy-filled, clear rigid mold type.

Piezoelectric lead-in cables shall be directly from the NTCS post base to the saw cut via the Type FM conduit. No splices in lead-in cables will be allowed.

Multiple loop detector and/or piezoelectric sensor cables shall be identified by colored tape or fabric tags at each access point. If multiple loops and/or piezoelectric sensors are installed, each shall be given a number that number shall be clearly designated within the NTCS enclosure.

C. Electrical Testing.

All tests shall be performed in the presence of the Engineer before and after the loops and/or sensor is sealed in the pavement. The cost of equipment, labor, and materials to perform such testing and retesting, if necessary, following repairs, replacement, or adjustment of any detector shall be included in the unit price for the item.

Each loop wire shall be tested for proper installation to obtain resistance (R), quality (Q), and Inductance (I) and a copy of the test results shall be provided to the Engineer:

- The resistance (R) for each loop sensor shall not exceed 3 ohms per 1,000 ft as measured by a high-quality meter suitable for measurements of low resistance.
- The quality of each loop tested (Q value) shall be no less than 5.
- The measured inductance (I) of each loop shall conform to calculated inductance values after accounting for the size of the loop, the number of turns, the wire gauge and length of cable.
- The piezoelectric sensor shall be tested in accordance with the manufacturer specifications before and after the sensor is sealed in the pavement. A copy of the completed piezo test results showing the capacitance, dissipation, and resistance of each piezo sensor installed shall be provided to the Engineer.

If any inductive loop detectors or piezoelectric sensors fails to pass any of the above tests, it shall be repaired and then retested. If the retest fails, a new inductive loop detector or piezoelectric sensor shall be installed, and shall pass these tests, at no additional cost. This shall be repeated until the required tests are all satisfactory.

871.62: System Testing, Calibration, and Acceptance

Any client software to configure, test, and/or calibrate the NTCS shall be provided. Any costs associated with this software shall be included in the bid price of the item.

The type of testing count(s) that will be performed depends upon the device type (Intersection or Trail). Intersection devices shall be tested in all detection zones in all directions, on all axes. Trail

devices shall be tested bidirectionally through the detection zone. Tests shall segregate by count subject type (pedestrians, bicyclists, and/or both).

The Contractor shall conduct accuracy testing to ensure proper operation of the NTCS. All testing shall take place during times of day and weather conditions when pedestrian and/or bicyclist activity will be anticipated. The accuracy testing shall consist of manual count collection by direction for a minimum of three 5-minute intervals for a total duration of 15 minutes in the presence of the Engineer. The Contractor shall retrieve the count collected by the NTCS during the same period and submit the manual and retrieved count data to the Engineer for verification of count accuracy.

Test results shall meet or exceed the accuracy levels stated in 871.45: Functional Requirements. Test results that fall under these levels will require the Contractor to modify, reconfigure, reinstall, and/or recalibrate and then retest at no additional cost.

All product documentation such as installation manual, user manual, wireless communication contract, warranties, and as-built drawings shall be submitted to the Engineer within 60 days of Acceptance for any Permanent NTCS.

COMPENSATION

871.80: Method of Measurement

Portable NTCS will be measured by the day for every 24-hour period deployed.

Permanent NTCS will be measured as a single unit, each in place.

871.81: Basis of Payment

Portable NTCS for Intersections and Portable NTCS for Trails will be paid for at the contract unit price Day and shall include all materials, equipment, batteries and solar array (if required), software, data housing and transmission, and labor to install, test and calibrate, maintain, and remove the device.

Permanent NTCS for Intersections and Permanent NTCS for Trails will be paid for at the contract unit price each and shall include all materials, equipment, batteries and solar array, software, data housing and transmission for a period of 10 years, and labor to install, test and calibrate.

871.82: Payment Items

871.11	Portable NTCS for Intersections	Day
871.12	Portable NTCS for Trails	Day
871.21	Permanent NTCS for Intersections	Each
871.22	Permanent NTCS for Trails	Each

SECTION 900: STRUCTURES

SUBSECTION 901: CEMENT CONCRETE

DESCRIPTION

901.20: General

Cement Concrete with or without reinforcement as required for bridges, culverts, walls, steps, drop inlets and other work shall be constructed to the designs and dimensions indicated on the plans or as directed and to close conformity with the lines and grades established by the Engineer.

Where necessary, at the direction of the Engineer, the dimensions or design may be adjusted to fit foundation, slope or construction conditions as encountered.

MATERIALS

901.40: Materials

Materials shall meet the requirements specified in the following Subsections of Division III, Materials:

- Cement Concrete M4.02.00
- High Performance Cement Concrete M4.06.1
- Reinforcing Steel M8.01.0
- Epoxy Coated Reinforcing Bars M8.01.7
- Galvanized Reinforcing Bars M8.01.8
- Mechanical Reinforcing Bar Splicer M8.01.9
- Stay-in-Place Bridge Deck Form M8.21.0
- Preformed Expansion Joint Filler M9.14.0
- Preformed Bituminous Fiber Joint Filler M3.05.3
- Preformed Compression Joint Seals (Bridges) M9.14.1
- Polyurethane Joint Sealer (Flow Type) M9.14.3
- Polyurethane Joint Sealer (Non-Sag Type) M9.14.4
- Bonded Closed Cell Joint System M9.14.6
- Plastic Water Stops M9.07.0
- Curing Materials
  - Impervious Liquid Membrane M9.06.5
  - Waterproof Paper M9.06.0
  - Burlap M9.06.3
  - White Polyethylene for Curing ..... M9.06.1, Part B
- Polyethylene Coated Burlap M9.06.4
- Concrete Penetrant/Sealer M9.15.0

Metal Masonry Plate Bearing Pads
Rubber - Cotton Duck Bearing Pad.....M9.16.1
Molded Fabric Bearing Pad.....M9.16.2

For any project that requires the placement of cement concrete for structural purposes, the Contractor shall supply to the project for the use of the Engineer the following equipment as an incidental item, if not already provided for in a previous section.

1. Concrete cylinder molds with plastic covers shall conform to the requirements of AASHTO M 205M/M 205. The standard concrete cylinder shall be 6 in. in diameter by 12 in. high for regular Cement Concrete. When the nominal maximum size of the coarse aggregate does not exceed 1 in., 4 in. in diameter by 8 in. high cylinders may be used.
2. One complete set of tools for fabricating concrete cylinders that meet the requirements of AASHTO T 23.
    a. Tamping rod shall be round, straight steel rod with at least the tamping end rounded to a hemispherical tip of the same diameter as the rod. Large rod, ⅝-in. diameter and approximately 2 ft long to prepare 6-in. diameter concrete cylinders; small rod, ⅜-in. diameter and approximately 12 in. long to prepare 4-in. diameter concrete cylinders.
    b. Rubber mallet, shovel, trowel, wood float, metal float, scoop, and wheelbarrow.
3. One complete set of apparatus for measuring the slump of fresh concrete and shall conform to the requirements of AASHTO T 119M/T 119.
    a. Slump cone.
    b. Tamping rod. A round smooth ⅝-in. steel rod with the tamping end rounded to a hemispherical tip of ⅝-in. diameter. The minimum length shall be 2 ft.
    c. Sheet metal pan 2 ft x 2 ft x 3 in.
    d. Cement mold brush, rule, scoop and trowel.
4. One complete set of apparatus for measuring the air content of freshly mixed concrete and shall conform to the requirements of AASHTO T 152.
    a. Air meter (AASHTO T 152, Type B).
    b. Tamping rod. A round smooth ⅝-in. steel rod with the tamping end rounded to a hemispherical tip of ⅝-in. diameter. The minimum length shall be 18 in.
    c. Rubber mallet, scoop, shovel, and a metal straightedge a minimum of 12 in. long.
5. One concrete curing box, equipped with thermostatically controlled cooling and heating device, meeting the moisture and temperature requirements of AASHTO T 23. The box shall be capable of holding a minimum of eighteen 6-in. x 12-in. cylinders.
6. Two 4-gal heavy duty buckets.
7. One complete device for measuring the temperature of freshly mixed concrete. The temperature measuring device shall conform to the requirements of AASHTO T 309.

CONSTRUCTION METHODS

901.60: Footings

No concrete shall be placed until after the Engineer has approved the depth and dimensions of the excavation, the character of the material and the condition of the foundation. No footing shall be supported partially on rock and partially on soil. The rock shall be excavated as necessary to allow the placement of gravel borrow in accordance with Subsection 140: Excavation for Structures. The

Engineer may direct, in writing, such changes in dimensions or elevations of footings as may be necessary to obtain satisfactory foundations. The Plans will be revised accordingly.

Shallow foundations (i.e., not supported by driven piles, drilled shafts, or other deep foundations) to be constructed under water shall be inspected prior to the placement of tremie concrete by a Diver hired by the Contractor independently and solely for the purpose of the inspection requirements of the Contract. The Diver shall be a Professional Engineer registered in the Commonwealth of Massachusetts.

In general, the Diver's tasks shall include inspection of the excavations for foundations to determine their completeness and suitability for the placement of concrete, inspection of the drilling and grouting operations for any dowels that may be specified, and inspection of the tremie placement operations to ensure that the concrete placement is proceeding properly and is completed in accordance with applicable contract documents.

The Diver shall be responsible to report any discrepancies in materials or workmanship to the Engineer. The Diver shall record their findings by written and photographic methods and a final report of findings, recommendations and actions taken shall be prepared for the Engineer.

901.61: Forms, Falsework, and Centering

Approved centers and forms shall be provided by the Contractor. Piles shall be used for falsework if required by the Engineer. No extra compensation for falsework or falsework piling shall be allowed, such work shall be considered part of the form work. Falsework shall be set to give the structural camber indicated on the plans or as specified, plus allowance for shrinkage, shortening under load or settlement. Forms, falsework, and centering shall be designed for a liquid head, equal to the maximum height of the liquid concrete in the forms for various placing conditions assuming the load of the liquid concrete to be 150 pcf, and in addition thereto a live load allowance of 50 psf on horizontal surfaces.

All falsework or centering shall be adequate for the type of construction involved. The Contractor shall submit all shop drawings for falsework and centering, including design computations, formally signed and sealed by the Contractor's Massachusetts registered Professional Engineer. The Contractor's Professional Engineer shall certify that the falsework system has been assembled and constructed according to the approved falsework drawings, prior to placing loads on such falsework.

When structures are to be constructed over railroad tracks, the centering shall also conform to the requirements of the Railroad Company as to temporary operating clearances, safety and design.

Forms for all exposed portions of bridges and structures shall be lined with approved material, or form sheathing which shall consist of five-ply water-proof plywood, approved metal sheathing or other approved material in order to give the concrete a smooth even finish and uniform appearance. This requirement shall not apply to any part of a structure that will be at least 2 ft below the surface of adjacent ground in the completed project that will not be coated with bituminous damp-proofing. Any material that will provide tight forms will be acceptable for such locations.

Full sheets of plywood or other approved material shall be used wherever possible and shall be placed in a regular pattern. The use of small pieces and leftovers will not be permitted except as

they may be needed to complete the design. Forms in good condition may be reused, but forms for any one exposed face shall be all new or all used material and a mixture of old and new forms will not be permitted. Forms for cylindrical pier columns shall be smooth and reasonably free of joints.

The sheathing shall be jointed tightly to prevent leakage from the mix and it shall be of sufficient strength to hold the concrete without bulging between supports. Forms shall be properly braced and tied so as to maintain proper dimensions. Bolts, rods, or other approved form ties shall be used for internal ties. Wire ties will not be permitted except when directed or where concrete is not exposed to view. The Engineer may require the Contractor to employ screw jacks or hard wood wedges in connection with the centering of falsework in order to take up any distortion or settlement in the form work either before or during the placing of the concrete.

Approved inserts required for form and/or falsework support shall be used in connection with all ties in the region of exposed surfaces on the concrete. They shall be so designed as to permit their removal from the concrete without injury to the concrete, and the metal remaining in the concrete shall be no closer than 1.5 in. to the surface. The inserts shall be truly round, not more than 1.5 in. in outside diameter and shall be treated with non-staining mineral oil or other satisfactory material adequate for preventing any adherence to surrounding concrete. Special tools and methods shall be used to remove the inserts from the concrete in a manner to prevent damage to the concrete. All ties and embedded devices required for form and/or falsework support that are to be left in place shall be either epoxy coated or galvanized to match the reinforcement within the concrete placement. Galvanizing of such ties and embedded hardware shall be in accordance with 960.64: Galvanizing.

Form ties of a design with a weakened section 1.5 in. back from the concrete face may be used at places of minor pressure when permitted by the Engineer, but such ties shall be provided with special inserts so as to assure the breaking off of the ties at the proper depth inside the face of the concrete. When such ties fail to break off at the designed depth, the tie metal shall be drilled out before the tie hole is patched. Voids and forming accessory holes shall be patched as necessary to match the surrounding texture and color to produce a uniform appearance.

The use of wooden struts within forms, or of metal ties without approved inserts, as required, will not be permitted.

The centers shall be true to the lines, satisfactorily supported and firmly secured. They shall remain in place as long as directed and shall be replaced with new ones if they lose their proper dimensions and shape.

Forms for the roadway deck slabs shall be so construed that under full dead load, the thickness of the slabs shall be the required thickness shown on the plans and the surface of the pavement will accurately conform to the profile grades, cross sections and alignment shown on the plans. Allowance shall be made for the camber of the floor members as erected and for the additional dead load deflections of the floor members.

Slab haunches shall be provided over steel girders, floor beams or stringers. The depth of haunches shall be variable as required to maintain the uniform thickness of slab between the steel supports.

All exposed edges and corners of concrete not otherwise specified on the plans shall be formed with a wooden triangular 45° chamfer strip, ¾ in. on the square sides. These triangular chamfer strips shall be machine surfaced on all sides and shall be of uniform dimensions throughout the project.

Any chamfered or beveled corners of concrete specified on the plans of larger size shall be formed and finished as required for other parts of the adjacent forms.

Surfaces of the abutments and wingwalls that are designated to receive striation texturing shall be cast using one of the following fractured fin form liner patterns:

1. GREENSTREAK Architectural Form Liners, pattern number 367, as manufactured by GREENSTREAK, 3400 Tree Court Industrial Blvd., St. Louis, MO 63122
2. SYMONS Form Liner, P/C 30492 pattern, as manufactured by SYMONS Corporation, Des Plaines, IL 60018
3. LITHOTEX Form Liner, T33050 texture, as manufacture by L.M. SCOFIELD Co., Los Angeles, CA 90040
4. An equal fractured fin form liner approved by the Engineer that meets the dimensions as shown on the Plans.

The same form liner pattern must be used exclusively for all textured surfaces on the job. Using form liners of different manufacturers together on the same job will not be permitted. Form liners shall be installed to the limits as shown on the Plans. The Contractor shall ensure that the striation fins are plumb. Horizontal joints are not allowed in the form liner.

Form liners shall be used and installed in accordance with the manufacturer's written instructions and recommendations. Additional job site training in the proper use of the form liner shall be provided by an authorized manufacturer's representative at no additional cost to the project. A test panel with a minimum size of 4 ft x 4 ft shall be erected at the job site for establishing acceptance criteria for the finished surface.

Bridge bearing anchor bolts in piers shall be set accurately by a template prior to placing concrete. Anchor bolts in abutments may be set by a template or by drilling and grouting. Grout shall be a non-shrinking type approved by the Engineer.

The shape, strength, rigidity, water-tightness and surface smoothness of re-used forms shall be maintained at all times. Any warped or bulged lumber must be resized before being used. Forms that are unsatisfactory in any respect shall not be used and shall be removed immediately from the work.

The inside of forms shall be coated with non-staining mineral oil or other approved material to prevent adherence of the concrete to the forms, immediately before placing the concrete. When oil is used, it shall be applied before the reinforcing steel is placed. Any material that will adhere to, discolor or affect the concrete in any manner shall not be used. Forms for bridge decks shall not be oiled but shall be dampened with water ahead of concrete placement.

In the construction of copings, railings and other intricate sections, extreme care shall be taken in the construction to insure true lines.

Prior to placing concrete in the forms all foreign matter and any extraneous materials shall be removed.

Forms shall be inspected immediately preceding and during the placing of the concrete. All dimensions shall be checked carefully and any errors, bulges, warping or other defects shall be remedied before any concrete is placed.

Temporary openings shall be provided for inspection at the base of the column and wall forms and near the bottom of all deep members.

The foregoing specifications for forms as regards to design, mortar-tightness, chamfers or moldings, bracing, alignment, treatment by coating with oil or other approved material, removing and reuse, shall apply to metal forms when such forms are approved for use. The metal forms used shall be of such strength that the forms will remain true to shape. All bolt and rivet heads shall be countersunk. Clamps, pins or other connecting devices shall be designed to hold the forms rigidly together and to allow removal without injury to the concrete. Metal forms which do not present a smooth surface or which do not line up properly shall not be used. Special care shall be exercised to keep metal forms free from rust, grease or other foreign matter that will tend to discolor the concrete. Metal forms shall be provided with an adjustable metal section or occasional sections where wooden forms may be inserted to compensate for slight inaccuracies in measurement.

Removable or stay-in-place forms for bridge decks may be used as alternates except in hazardous locations where stay-in-place forms shall be used. Hazardous locations are defined as high volume roadways and all railroads under the bridge.

Removable forms shall be used for forming end diaphragms, bays with longitudinal construction joints, and overhanging portions of decks.

Material to prevent concrete from adhering to the forms shall not be used when stay-in-place forms are used.

Design of Permanent Steel Bridge Deck Forms.

The following criteria shall govern the design of permanent steel bridge deck forms:

1. The steel forms shall be designed on the basis of dead load of form, reinforcement and plastic concrete plus 50 psf for construction loads. The unit working stress in the steel sheets shall not be more than 0.725 of the specified minimum yield strength of the material furnished, but not to exceed 36,000 psi.
2. Deflection under the load of the forms, the plastic concrete and reinforcement shall not exceed 1/180 of the form span or ½ in., whichever is less. In no case shall this design loading be less than 120 psf total.

The permissible form camber shall be based on the actual dead load condition. Camber shall not be used to compensate for deflection in excess of the foregoing limits.

3. The design span of the form sheets shall be the clear span of the form plus 2 in. (50 mm) measured parallel to the form flutes.
4. Physical design properties shall be computed in accordance with requirements of the American Iron and Steel Institute Specification for the Design of Cold Formed Steel Structural Members, latest published edition.
5. Longitudinal reinforcement shall have minimum concrete cover, as measured from the permanent steel deck form, of 1 in. Main reinforcement shall have minimum concrete cover, as measured from the permanent steel deck form, of 1.5 in.
6. The plan dimensions of both layers of primary deck reinforcement from the top surface of the concrete deck shall be maintained.

7. Permanent steel bridge deck form shall not be considered as lateral bracing for compression flanges of supporting structural members.
8. Permanent steel bridge deck form shall not be used in panels where longitudinal deck construction joints are located between stringers.
9. Welding shall not be permitted to flanges in tension or to structural steel bridge elements fabricated from nonweldable grades of steel.
10. Fabricator's shop and erection drawings shall be submitted to the Engineer for approval. These plans shall indicate the grade of steel deck form sheets and a clear indication of locations where the forms are supported by steel beam flanges subject to tensile stresses.

All forms shall be installed in accordance with approved fabrication and erection plans. Form sheets shall not be permitted to rest directly on the top of the stringer or floor beam flanges. Sheets shall be securely fastened to form supports and shall have a minimum bearing length of 1 in. at each end. Form supports shall be placed in direct contact with the flange of stringer or floor beam. All attachments shall be made by permissible welds, bolts, or clips of other approved means. However, welding of form supports to flanges of steels not considered weldable and to portions of flange subject to tensile stresses shall not be permitted. Welding and welds shall be in accordance with the provisions of AWS D1.3 pertaining to fillet welds except that ⅛-in. fillet welds will be permitted.

Any permanently exposed form metal where the galvanized coating has been damaged shall be thoroughly cleaned and painted with galvanizing repair paint in accordance with 960.64: Galvanizing. Minor heat discoloration in areas of welds need not be touched up.

The Contractor's method of construction should be carefully observed during all phases of the construction of the bridge deck slab. These phases include installation of the metal forms; location and fastening of the reinforcement; composition of concrete items; mixing procedures, concrete placement and vibration; and finishing of the bridge deck. Should the Engineer determine that the procedures used during the placement of the concrete warrant inspection of the underside of the deck, the Contractor shall remove at least one section of the forms at a location and time selected by the Engineer for each span in the contract at no additional cost to the project. This should be done as soon after placing the concrete as practicable in order to provide visual evidence that the concrete mix and the Contractor's procedures are obtaining the desired results. An additional section shall be removed at no additional cost to the project if the Engineer determines that there has been any change in the concrete mix or in the Contractor's procedures warranting additional inspection.

After the deck concrete has been in place for a minimum period of 2 days, the concrete shall be tested for soundness and bonding of the forms by sounding with a hammer as directed by the Engineer. If areas of doubtful soundness are disclosed by this procedure, the Contractor will be required to remove the forms from such areas for visual inspection after the pour has attained adequate strength. This removal of the permanent steel bridge deck forms shall be at no cost to the project. At locations where sections of the forms are removed, the Contractor will not be required to replace the forms, but the adjacent metal forms and supports shall be repaired to present a neat appearance and assure their satisfactory retention. As soon as the form is removed, the concrete surfaces will be examined for cavities, honeycombing and other defects. If irregularities do not justify rejection of the work, the concrete shall be repaired as the Engineer may direct and shall be given an Ordinary Surface Finish, in accordance with the contract specifications. If the concrete where the form is removed is unsatisfactory, additional forms, as necessary, shall be removed at no

additional cost to the project to inspect and repair the slab, and the Contractor's methods of construction shall be modified as required to obtain satisfactory concrete in the slab. All unsatisfactory concrete shall be removed or repaired as directed by the Engineer.

The amount of sounding and form removal may be moderated, at the Engineer's discretion, after a substantial amount of slab has been constructed and inspected, if the Contractor's methods of construction and the results of the inspections as outlined above indicate that sound concrete is being obtained through the slabs.

The Contractor shall provide all facilities as are reasonably required for the safe and convenient conduct of the Engineer's inspection procedure.

901.62: Reinforcement

The Contractor shall submit for approval detailed shop drawings and schedules of the reinforcing bars so that the reinforcement may be properly placed, and its mass readily computed.

Coated bars shall be either epoxy coated or galvanized, as specified on the plans. Where coated bars are called for without distinction, they may be either epoxy coated bars or galvanized bars, however mixing epoxy coated and galvanized bars will not be permitted. Where coated bars are used in combination with uncoated bars in a reinforcing mat or cage and the coated bars will touch or be tied to uncoated bars with wire ties, only epoxy coated bars shall be used.

All support devices and ties for galvanized bars used in deck reinforcing shall be coated so that there is no electrical continuity either between reinforcing mats or between the reinforcing and the stay-in-place forms or steel beams.

All support devices and ties for epoxy coated bars used in deck reinforcing shall be either epoxy coated or coated with a plastic material compatible with the coating of the reinforcement.

All coated and un-coated reinforcing bars shall be stored above the surface of the ground on platforms, skids, or other supports and shall be protected from mechanical injury and surface deterioration caused by exposure to conditions producing rust. When placed in the work, reinforcing bars shall be free from dirt, loose rust or scale, mortar, paint, grease, oil, or other non-metallic coatings that reduce bond. Reinforcing bars shall be free from injurious defects such as cracks and laminations. Any injurious defects of the epoxy coating shall be repaired and allowed to cure completely prior to concrete placement.

Epoxy coated reinforcing bars shall be coated in a certified epoxy coating applicator plant in accordance with the Concrete Reinforcing Steel Institute's Voluntary Certification Program for Fusion-Bonded Epoxy Coated Applicator Plants. Epoxy coated reinforcing steel shall be handled and stored by methods that will not damage the epoxy coating. All systems for handling epoxy coated reinforcing bars shall have adequately padded contact areas. All bundling bands shall be padded and all bundles shall be lifted with a strong back, multiple supports, or platform bridge so as to prevent bar to bar abrasion from sags in the bundle. Bars or bundles shall not be dropped or dragged. Epoxy coated reinforcing bars shall be stored on wooden or padded supports.

Epoxy coated reinforcing steel shall be protected from sunlight, salt spray, and exposure to the weather. Provisions shall be made for continuous air circulation around the coated reinforcing to minimize condensation under the protective covering.

If it is impractical to obtain or use bars of the full length required, the bars shall be lapped for the length shown on the plans or joined with mechanical splicers. If no lap length is provided, the lap length shall be calculated for the type of bar used according to the latest AASHTO Standard Specifications for Highway Bridges for a Class C tension lap splice.

If mechanical splicers are used proper consideration shall be given to the installation sequence and shall be so noted on the reinforcing steel shop drawings. The mechanical splicing system shall be assembled in accordance with the manufacturer's recommendations.

Reinforcement bars to be spliced mechanically shall be marked using indelible ink prior to splice attachment to ensure sufficient embedment in the splicing device. Assembly features shall provide for reasonably error free work under construction conditions. Mechanical reinforcing bar splicers shall be staggered in accordance with the Plans.

The entire splice area of epoxy coated mechanical splicing systems shall be painted with a compatible approved epoxy repair coating after the system is assembled. The entire splice area of galvanized splicing systems shall be painted with a compatible approved galvanizing repair coating after the system is assembled. For mechanical splicer systems that cannot be effectively sealed with an epoxy or galvanizing repair coating, an approved heat shrink tube/sleeving shall be required after installation to seal the system. The mechanical splicer shall not be encased in concrete until the visual inspection and the required testing have been completed and approved by the Engineer.

The steel shall be bent in the shop true to templates and shall be placed accurately as shown on the plans with the following tolerance:

1. Cover (clearance from face of concrete to face of bar) ±¼ in.
2. Horizontal spacing of bars ±2 in. (however the required number of bars must be placed). The minimum spacing cannot be decreased. The reinforcement shall be placed so as to ensure it remains in the correct position during the placing and hardening of the concrete. The clear distance between spliced bars and/or splicing devices shall not be less than 1.5 times the nominal diameter of the bars, 1.5 times the maximum size of the coarse aggregate, nor less than 1.5 in.

The required distance between reinforcing steel and the forms shall be maintained by means of stays, blocks, ties, hangers or other approved supports. The spacing of reinforcing supports shall not exceed 4 ft.

Steel reinforcing mats shall be firmly secured against displacement by tying every other intersection point with a maximum of 12 in. between tied joints. In addition, steel reinforcing mats (top and bottom) shall be securely connected together so that uniform vertical spacing can be maintained throughout. This connection may be accomplished by tying with coated tie wires or other means as approved by the Engineer. Connections between the top and bottom mats of reinforcement shall be placed no farther apart than 4 ft on center. Support devices may be utilized for this purpose. Connection devices shall neither deflect the steel reinforcing nor interfere with the smooth flow of concrete.

Blocks for holding reinforcement from contact with the forms shall be precast mortar blocks of approved shape and dimensions. Blocks for spacing reinforcing bars shall also be precast mortar blocks of approved designs and short enough to permit their ends to be adequately covered with concrete. The precast mortar blocks shall be made from the same materials and of the same

proportions of sand and cement as that of the concrete in which they are to be used. They shall be cast and properly cured before use and shall have a wire of copper or other non-rusting metal or other approved device cast into each block suitably placed so that the block can be securely fastened to the reinforcement. Layers of bars, except for those placed in bridge decks, shall be separated by such blocks, which may be reinforced, and which shall have slots to receive the bars and hold them in place, or by other approved means. Any parts of metal supports that are left in place within 3 in. of an exposed surface of the concrete shall be made of either non-rusting metal, or shall be epoxy coated or galvanized to match the reinforcement. Galvanizing of such parts shall be in accordance with 960.64: Galvanizing. The use of pebbles, pieces of broken stone, metal pipe or wooden blocks will not be permitted.

Reinforcement in any member or section shall be in place and approved by the Engineer before the placing of concrete begins. In no case shall reinforcing steel be driven or forced into the concrete and any reinforced concrete placed in violation of this provision will be rejected by the Engineer, and then shall be removed and replaced by the Contractor entirely at their own expense.

When wire mesh is used as reinforcement, it shall be furnished and placed in accordance with the plans. If the wire mesh is shipped in rolls, it shall be straightened into flat sheets before being used.

Dowels, where required, shall be furnished and placed as indicated on the plans and as directed.

Reinforcement that extends continuously within the concrete of the substructure and the concrete of the superstructure, or any other reinforcement that might stain the exposed surface of the bridge shall be given a light coat of neat cement grout on the surfaces of the reinforcement that will be exposed for more than three weeks before being encased in concrete. Subsequent coats of grout may be required.

901.63: Handling and Placing Concrete

The Contractor shall notify the Engineer at least 24 hours in advance of their intention to place concrete in order to provide ample time for inspection of forms, reinforcement, materials, and equipment.

All concrete shall be placed during daylight, and the placing of concrete shall not be started unless it can be completed and finished during daylight hours, except that when an adequate and approved lighting system is provided beforehand, the Engineer may waive this requirement.

No concrete shall be placed in a bridge or other structure where piles are required until all piles in the structure have been driven. However, the placing of concrete in the steel shells for cast-in-place concrete piles and steel pipe piles shall be done as specified in 940.69: Placing and Protecting Concrete Filled Piles.

No concrete shall be placed until the depth, character and water conditions of the foundations, the adequacy of falsework and forms, the absence of debris in the forms, the condition of the construction joints, and the condition and spacing of the reinforcing steel have been inspected and approved by the Engineer.

The placing of concrete shall be so regulated that the pressures caused by the wet concrete shall not cause distortion or movement of the forms.

The placement and consolidation of the concrete shall be conducted so as to not cause segregation of materials nor displacement of reinforcement and shall result in a dense homogeneous concrete that is free of voids.

Concrete shall be deposited in such manner that the total deflection or settlement of supporting members and the final finishing of the surface shall have occurred before initial set of the concrete takes place. An approved admixture shall be used as necessary to retard setting.

A. Transportation.

The concrete shall be transported from the mixer and placed in the forms by a method that will permit handling concrete of the slump required without segregation. Buggies and wheelbarrows used for this purpose shall be equipped with pneumatic tires. Chutes may be used but the use of long chutes will be permitted only on authority from the Engineer. If such conveyors are allowed and the quality of the concrete as it reaches the forms or the methods of placing or working it therein are not satisfactory, the Engineer may order their use discontinued and the substitution of a satisfactory method of placing. Chutes shall be constructed of aluminum free metal or metal lined and shall extend as nearly as possible to the point of concrete placement. Long chutes shall be provided with reverse flow or remixing hoppers in order to correct for segregation. All chutes shall be kept clean and free from coatings of hardened concrete. Concrete shall not be permitted to be transported through chutes or pipes composed of aluminum.

Transportation of concrete by pumping will be permitted provided that the required slump or air content can be maintained at the discharge end of the hose and there is no adverse effect to the mix design. Concrete shall be sampled and tested at the end of the chute or if pumping is allowed, from the discharge end of the hose. The equipment shall be suitable in kind and adequate in capability for the work. The operation shall be such that a continuous stream of concrete without air pockets is produced. When pumping is completed, the concrete remaining in the pipeline shall be ejected in such a manner that there will be no separation of the ingredients.

Pumping through aluminum pipes will not be permitted.

All pipes and chutes shall be kept clean and free from coatings of hardened concrete.

B. Depositing.

The concrete shall be placed in the form in the approved manner to prevent stone pockets, voids or segregation and to reduce handling and flowing in the forms to a minimum. The concrete shall not be dropped more than 3 ft or dragged more than 10 ft in the forms. Vibrators shall not be used to transport concrete. Epoxy coated steel reinforcement shall be protected from damage from dropping concrete by limiting the maximum height of concrete drop to 2 ft. Points of deposit shall be spaced not more than 20 ft apart nor more than 10 ft from the ends of the forms. Concrete shall be properly distributed in the forms by hand shoveling. The forms shall be filled at a rate of 1 to 3 ft in depth per hour. Care shall be taken to avoid splashing the forms and reinforcing above the level of the concrete as placed. Beams and slabs shall be placed in one continuous operation.

C. Consolidation.

Each layer shall be thoroughly consolidated by rodding and vibration. The face of the forms shall be carefully spaded, if possible, to bring a dense mortar to the face, and produce a good finish.

All concrete for structures shall be compacted by means of approved mechanical vibrators operated within the mass of the concrete. The Contractor shall provide approved methods of vibration to fully consolidate the mix. Vibrators shall be of internal type of standard make and approved capacity, and shall be capable of transmitting vibrations within the concrete at frequencies of not less than 5,500 vibrations per minute nor more than 13,500 vibrations per minute. Epoxy coated steel reinforcement shall be protected from damage from exposed steel headed immersion-type vibrators. Immersion-type vibrators used to consolidate concrete that is reinforced with epoxy coated reinforcement shall feature heads covered with rubber or other resilient non-metallic material approved for concrete consolidation.

Vibration of forms or reinforcing shall not be permitted except where internal vibration is not practicable and then only with the approval of the Engineer.

The vibrator shall be applied directly to the concrete mass at the point and time of deposit and shall be moved throughout the mass continuously from point to point for a sufficient duration to accomplish thorough consolidation. The duration of vibration shall not be prolonged to the point where segregation, serious loss of entrained air, or excessive water bleeding occurs. Vibrators shall not be used close to the forms.

When concrete is placed in lifts, vibrators shall be inserted into at least half the depth of the underlying lift so as to thoroughly consolidate the two lifts into an integral mass without streaks or hardened lift lines. Vibrators shall not be used to move concrete in the forms.

A sufficient number of vibrators shall be provided to obtain proper compaction in accordance with the rate of deposit.

Extreme care shall be taken to prevent penetrating or disturbing previously placed concrete that has become partially set.

D. Placing Concrete Under Water.

Concrete may be deposited in water only when provided by the plans or in the Special Provisions or by approval in writing by the Engineer; and only under the direct supervision of the Engineer.

The concrete shall be of the designation required except that an additional 10 percent of cement shall be added to all concrete deposited under water except that mass concrete shall be placed with the cement content required by Special Provisions.

The method and equipment to be used shall be approved by the Engineer before work has begun.

Concrete deposited under water shall be carefully placed by the tremie method in a compound mass in its final position and shall not be disturbed after being deposited. Special care must be taken to maintain still water at the point of deposit. No concrete shall be placed in running water and all form work designed to retain concrete under water shall be watertight. The consistency of the concrete shall be carefully regulated, and special care shall be taken to prevent segregation of the materials. The concrete shall be distributed uniformly over the entire area between forms in order to maintain a level surface.

The work shall be carried out in a continuous operation with sufficient rapidity to prevent the formation of layers or inclined seams. Concrete shall not be placed in water having a temperature

below 35°F. Pumping of water will not be permitted while the concrete is being deposited nor before it is sufficiently hardened.

The tremie shall be watertight, consisting of a tube constructed in sections with flange couplings fitted with gaskets, and the inside diameter shall be sufficiently large to permit a free flow of concrete. The spacing of tremie tubes shall not exceed 20 ft on centers or 10 ft from the forms. Tremie tubes shall not be moved horizontally or the seal purposely broken once placing of concrete has started.

The radius of influence of a tremie shall not be assumed to exceed 10 ft. The means of supporting the tremie shall be as such as to permit it to be rapidly lowered when necessary to retard or stop the flow of concrete. The discharge end shall be closed at the start of the work so as to prevent water from entering the tube and shall be kept entirely sealed at all times and the tremie tube kept full to the bottom of the hopper during the depositing of the concrete. When a batch is dumped into the hopper the tremie shall be slightly raised, but not out of the concrete at the bottom, until the batch discharges to the bottom of the hopper. The flow shall then be stopped by lowering the tremie. Special care shall be taken to maintain as nearly as practicable a uniform flow and to avoid dropping the concrete through the water. The flow shall be continuous until the work is completed. If the charge is lost during depositing, the tremie shall be withdrawn and refilled.

Dewatering may start when the concrete seal has reached a compressive strength of 1,200 psi.

All laitance and scale shall be removed so that sound, durable concrete is exposed to the area on which the construction is to be based and shall be leveled off with epoxy bonded concrete or mortar.

E. Concrete Exposed to Sea Water.

Concrete structures so located as to be subjected to the action of sea water shall be constructed in a manner to provide a maximum resistance to its disintegrating action.

The concrete shall conform to M4.06.1: High Performance Cement Concrete. The water content shall be carefully controlled and so regulated as to produce concrete of maximum impermeability. In placing concrete, care shall be taken to avoid the formation of pockets and the concrete shall be thoroughly compacted to the satisfaction of the Engineer. The original surface of the concrete shall be left undisturbed. In order to secure a thick and dense surface film, the surfaces of the forms shall be heavily coated with shellac or an approved form oil. The range of possible disintegration of the concrete from an elevation below that of low tide to an elevation above that of extreme high tide shall be determined by the Engineer, and, except with their special permission, no construction joints shall be located within this range. In the determination of this range, due consideration shall be given to wave action, ice formation and other conditions affecting the extreme limits of possible deterioration and disintegration.

Concrete in sea water within the range as above determined shall, except when especially provided for by the plans or in the Special Provisions, be deposited in the dry and no sea water shall be allowed to come in direct contact with the concrete for at least 30 days after placement.

901.64: Protection from Adverse Weather

Suitable precautions shall be taken to thoroughly protect the concrete from any damage by adverse weather conditions during and after placement.

A. Hot and Dry Weather Requirements.

During hot dry weather, and as directed, all new concrete shall be kept shaded from the sun, shielded from the wind and kept wet with water, or protected by other approved methods to retain the moisture in the concrete throughout the curing period. During concrete placement operations in hot weather, appropriate measures shall be taken to reduce the hazards of increased rate of cement hydration, flash set, loss of water due to evaporation, high concrete ingredient temperatures, and the increased difficulty of concrete placing and finishing. The following requirements shall be met during concrete placement operations in hot weather:

1. Concrete Temperature. The temperature of the concrete at the point of discharge shall not exceed 90°F.
2. Cooling Materials. The Contractor may reduce the temperature of the concrete by cooling one or more of several ingredients. The aggregates may be cooled by fogging, or other suitable means that will not result in a high variation of moisture content within the stockpile. Chipped or crushed ice may be used in the mix as a portion of the mixing water on a pound for pound basis, provided such measure is determined at the time it is placed in the mix. If used, all ice shall be melted before the batch is discharged from the mixing unit. Water may also be cooled by refrigeration or other means that provide a uniform mixing water temperature.
3. Concrete Placing. Immediately before the concrete is placed, the forms and reinforcement steel shall be cooled by spraying with water. In no case shall there be any standing water in the concrete forms as a result of the spraying procedures. The Contractor shall have sufficient skilled men and adequate equipment to place the concrete without delays which may cause excessive slump loss and evaporation due to over-mixing or exposure before it is placed.
4. Finishing. To prevent shrinkage cracking resulting from moisture loss, the Contractor may be required to furnish windscreens, to use water fogging, or other approved means of supplying moisture. If the use of windscreens is required, the windscreens shall consist of canvas barriers of suitable height erected on the windward side of the concrete placement. Finishing operations shall follow as closely as practicable behind the placing operation so that curing may begin as soon as possible.

B. Rainy Weather Requirements.

During rainy weather all new concrete shall be properly covered, as may be necessary to prevent damage. Sufficient approved material for covering shall be available at the site of the work for immediate use as may be needed.

C. Cold Weather Requirements.

Cold weather is defined as any time during the concrete placement or curing period the ambient temperature at the work site drops below 40°F or the ambient temperature at the site drops below 50°F for a period of 12 hours or more. Any concrete placed during cold weather shall be placed at the Contractor's risk and any damage or unsatisfactory concrete shall be removed and replaced at

the Contractor's expense. When cold weather is reasonably expected or has occurred within 7 days of anticipated concrete placement, the Contractor shall include as part of their Placement and Curing Plan detailed procedures for the production, transporting, placing, protecting, curing, and temperature monitoring of concrete during cold weather. The Contractor shall include verifiable evidence of satisfactory results obtained by use of their proposed methods. Procedures for accommodating abrupt changes in weather conditions shall be included. Placement of concrete shall not commence until the plan is accepted by the Engineer. Acceptance of the plan will take at least one day. All material and equipment required for cold weather placement and curing protection shall be available at the project site before commencing concrete placement. All snow, ice, and frost shall be removed from the surfaces, including reinforcement and subgrade, against which the concrete is to be placed. The temperature of any surface that will come into contact with fresh concrete shall be at least 35°F and shall be maintained at a temperature of 35°F or above during the placement of concrete.

During the curing period, the Contractor shall provide suitable measures to maintain the concrete surface temperature which shall be monitored by continuously recording surface temperature measuring devices that are accurate within 1.8°F. One temperature measuring device shall be required to be randomly placed in an accessible location for every 1,500 ft² of concrete surface area being cured.

The minimum concrete surface temperature requirements indicated in the Table 901.1 shall be continuously maintained for a curing period of at least 7 days. The 7-day minimum curing period of time will be extended when necessary to develop satisfactory strength in the concrete.

Any day during which the minimum concrete surface temperature requirement is not continuously maintained shall not count as a day contributing to the curing period.

Table 901.64-1: Cold Weather Concrete Surface Temperature Requirements

	Minimum Section Size Dimension (ft)			
	<1	**>1, but ≤3**	**>3, but ≤6**	**>6**
Minimum temperature of concrete during curing period	57°F	54°F	50°F	50°F
Maximum allowable temperature drop in any 24-hour period after end of curing	50°F	40°F	30°F	20°F

The mixing water and/or aggregates may be heated (prior to cement being added) by approved methods so that the temperature of the aggregates and water mixture is not less than 70°F nor more than 140°F. The temperature of the concrete shall not be less than 60°F nor more than 90°F at the time of placing it in the forms. The heating shall be done in a manner to preclude the occurrence of overheated areas that might result in damage to the materials. Any material containing frost or lumps of hardened material shall not be used.

Insulation shall be approved blanket, batt or board insulation with a thermal conductivity of less than 0.25 BTU per hour per square foot for a thermal gradient of 1°F/in. Insulation shall be applied

to the forms in an approved manner. Insulation with breaks or tears shall be rejected unless satisfactorily repaired. Openings for thermometers shall be provided where ordered.

Where it may be expected that considerable heat will be generated by the hydration of the concrete, and in some cases where heat is not rapidly dissipated, suitable coverings shall be used to protect concrete. Heavy footings in which the concrete is placed at a concrete temperature of 70°F where protection is provided by the surrounding earth, except on top, shall be protected by a tarpaulin placed over the top with an air space between the concrete and the tarpaulin and sufficient added artificial heat shall be provided to maintain the minimum required concrete surface temperature. Mass concrete, when concrete as such is so specified on the plans or so defined by the Engineer, placed at a concrete temperature of 70°F, shall be protected by enclosure with tight wooden forms at least ⅝ in. in thickness except at corners and edges and sufficient added artificial heat shall be provided to maintain the minimum required concrete surface temperature. Double sheathing, insulation board or tarpaulins with a dead air space between the covering and the forms shall be placed to equally protect such corners and edges. Supplemental enclosures and added artificial heat will be utilized when required to maintain the minimum concrete surface temperature.

As much as possible, any enclosure for protection shall be in place before depositing of any concrete and the remainder shall be installed as rapidly as possible in order to reduce heat losses to a minimum. Heating within the enclosure shall be attained by such means of artificial heat as will maintain the temperatures specified continuously and with a reasonable degree of uniformity in all parts of the enclosures. All exposed surfaces of concrete within the enclosure shall be kept sufficiently moist to prevent any drying of the surface concrete with possible resulting damage to the concrete in place. Heating appliances shall not be placed in such a manner as to endanger the enclosure, forms or supports, or expose any area of concrete to drying out or other injury due to excessive temperatures.

901.65: Finishing and Curing

The requirements of this subsection shall be considered applicable to all concrete placements with the exception of bridge deck, bridge sidewalk, bridge safety curb, and bridge median concrete placements. Refer to the requirements specified under 901.66: Placement, Finishing and Curing of Concrete Bridge Decks for bridge deck, bridge sidewalk, bridge safety curb, and bridge median concrete placements.

A. Finishing.

The external surface of all concrete shall be thoroughly vibrated and spaded during the operation of depositing the concrete by means of tools of an approved type. The vibrating and spading shall be such as to force all coarse aggregate away from the surface and slowly work the mortar against the forms to produce a smooth finish free from water, air pockets, and honeycombing. The use of mortar, cement water mixture, or neat cement for plastering over any concrete surface will not be permitted.

The final finish required on particular concrete shall be as follows:

1. Formed Surfaces not Exposed to View.

Immediately after forms have been removed and form ties cut back from the face of the concrete, all voids and cavities shall be filled with a stiff mortar of the same composition and air-entrainment as

the mortar in the original concrete mix. The mortar for filling shall have been mixed and let set for 30 minutes and then remixed before placing in the work. In case the operation of filling is delayed, the surface of the concrete shall be thoroughly cleaned and washed with water, if necessary, before the mortar is applied.

2. Formed Surfaces Exposed to View.

Within 48 hours after the forms have been removed and form ties cut back from the face of the concrete, all fins, projections and irregularities shall be carefully removed and all voids and cavities shall be carefully and completely filled with a stiff mortar of the same composition and air-entrainment as the mortar in the original concrete mix. The same brand and color of cement, and the same kind and color of aggregate as was used in the original concrete mix shall be used in this mortar. The mortar for filling shall have been mixed and let set for 30 minutes and then remixed before placing in the work. The surface film of all such pointed surfaces shall be carefully removed before setting of the mortar occurs.

If the Engineer determines these surfaces as prepared do not present a uniformly smooth, clean surface of even texture and appearance, the surface shall be treated and rubbed to obtain a satisfactory finish. The Engineer shall be the sole judge of the amount of rubbing which will be required.

If rubbing is required, the rubbing will start with 48 hours of notification that rubbing is required, the surface should be wetted with clean water and rubbed with a No. 16 carborundum brick or other abrasive of equal quality until even and smooth and of uniform appearance, without applying any cement or other coating. If additional finishing is necessary, it shall be obtained by a thorough rubbing with a No. 10 carborundum brick or other abrasive of equal quality. Subject to approval by the Engineer, rubbing may be performed by use of satisfactory power equipment and tools, providing that the operational procedures shall be the same as those outlined above for hand rubbing.

Rubbing will be kept to a minimum found necessary to produce smooth, even surfaces of uniform appearance. Rubbing will not be required to fill very small surface air bubble holes, to remove a uniform wood grain pattern left by forms, nor to remove inconspicuous lines or marking between form panels.

Patches required for form ties, if carefully and properly done, may not necessitate rubbing. If however, this work is done in such a manner that these patches are conspicuous, the entire exposed face on which they occur shall be rubbed.

After the final rubbing is completed, and the mortar has set up, the surface shall be thoroughly drenched and kept wet with clean water for a period of 5 days.

No rubbing will be permitted when the air temperature is below 40°F.

3. Preparation of Bridge Seat Bearing Areas.

(a) General.

Bridge seat bearing areas shall be considered to be those areas of the concrete bridge seats of the abutments, piers, and pedestals that support the bridge bearing devices. The limits of the bridge

seat bearing area shall extend 3 in. outside of the perimeter of the bearing device component that is in contact with the bridge seat.

Bearing devices shall not be placed upon bridge seat bearing areas that are improperly finished, deformed or irregular. Bearing devices shall be set to the required grade in the exact positions called for on the plans and shall have full and even bearing upon the bridge seat cement concrete. Satisfactory drainage shall be provided as called for on the plans and where necessary to prevent water accumulation at the bridge seat bearing areas.

(b) Bearing device installations for adjacent precast concrete deck beam bridges with spans 50 ft or less.

The bridge seat concrete as cast shall be finished to the exact final required elevation and to the roadway profile grade slope in the direction parallel to the centerline of construction and to the cross slope set by the bridge seat elevations in the direction parallel to the centerline of bearings.

(c) For all other bearing device installations.

The surface of the concrete within the limits of the bridge seat bearing area shall be cast a minimum of ¼ in. higher than the required finished elevation. This additional concrete shall be cast monolithically with the rest of the bridge seat concrete and shall be sound and free of voids and laitance. After the concrete has been cured and thoroughly hardened, these areas shall be machine dressed down using approved methods to provide a true even surface at the following elevations and grades:

(1) Elevations: For bearing devices where the elastomeric bearing pad is placed directly onto the as-finished bridge seat concrete surface, the surface of the bridge seat bearing area shall be dressed down to the exact final required elevation.

For bearing devices that utilize a metal masonry plate, the metal masonry plate shall be set on a system of either rubber-cotton duck bearing pads or molded fabric bearing pads and the surface of the concrete shall be dressed down sufficiently below the required finished elevation so that the rubber-cotton duck or molded fabric bearing pad will bring the bottom of the masonry plate to the exact final required elevation.

(2) Grades: The bridge seat bearing areas shall be finished level, except that the bridge seat bearing area for adjacent prestressed concrete deck and box beams shall be finished level in the direction parallel to the centerline of construction and shall be finished to follow the cross slope set by the bridge seat elevations in the direction parallel to the centerline of bearings.

4. Bridge Approach Slabs.

After concrete is placed, the top surface shall be struck off to the proper crown and longitudinal profile with an approved template. Satisfactory supports, furnished by the Contractor, shall be set and maintained in place for proper operation of the template so that the surface shall be furnished to the required elevations. These supports shall be carefully removed from the concrete before any set of the concrete occurs, and the spaces left by such removal shall be immediately filled and finished to the level of the adjacent surfaces. The surface shall be checked, by means of an approved straightedge, not less than 10 ft in length, furnished by the Contractor, as the Engineer may direct.

Any irregularities, measuring more than ¼ in. vertically, shall be corrected and the whole surface shall be made smooth and even. No load of any kind shall be placed on the concrete after setting of the concrete has begun, and any work on the concrete then required shall be performed from approved bridges furnished by the Contractor, which will not rest on the new concrete in any manner.

B. Curing.

All concrete shall be kept fully saturated and protected against any drying action by methods of curing specified herein or as otherwise approved by the Engineer for not less than 7 days after placing cement concrete. All surfaces of concrete which are to receive a rubbed surface finish or on which bitumen is to be placed, and concrete at construction joints shall be cured in accordance with requirements below for water curing. All other concrete may be cured in accordance with requirements below for water curing or waterproof membrane curing.

1. Mass Cement Concrete.

Cement concrete placements where all volumetric dimensions of the placement are 4 ft or greater shall be considered mass cement concrete. Mass cement concrete shall also include cement concrete placements of other dimensions where measures must be taken to mitigate potential cracking caused by heat of hydration when such placements are specifically designated as mass cement concrete on the plans. The Contractor shall perform the following to prevent cracking in mass cement concrete placements:

- Limit the temperature differential between the internal (hottest) and external (coolest) temperature of the cement concrete to 38°F and limit the maximum concrete temperature to 154°F. Heat control shall be accomplished through a combination of proper cement concrete ingredient selection to minimize heat generated, pre-placement cement concrete ingredient cooling, post-placement cooling, cement concrete placement rate control, cement concrete surface insulation to minimize heat loss, and providing supplemental heat to prevent heat loss.
- Submit for review and approval by the Engineer at least 30 days prior to the date of intended cement concrete placement, along with each mix design, a cement concrete heat of hydration analysis and a detailed plan indicating how temperature differential restrictions for mass cement concrete are to be achieved, methods of observing and recording cement concrete temperatures, and methods of applying immediate corrective action should the temperature differential approach 38°F so as to limit the temperature differential to 38°F.
- Measure and record concrete and ambient air temperatures on an hourly basis. Install 2 sets of 3 temperature sensors (thermocouples) prior to placement of concrete. Thermocouples shall be installed so that one is located 2 in. from the top of flat placements or side of vertical placements, one is located 2 in. from the bottom of flat placements or other side of vertical placements, and the third is located midway between the first and second thermocouples. The thermocouples shall be aligned vertically for flat placements or aligned horizontally for vertical placements. For flat placements, one thermocouple set shall be placed in the center of the plan location of the placement and the second set shall be placed in the plan center of one of the quadrants. For vertical placements, one sensor set shall be located at the mid-height of the placement and the other sensor set shall be located at a quarter point. An additional thermocouple shall be placed in a sheltered area that is out

of direct sunlight, is protected from weather, and shall be used to monitor the air temperature.

The thermocouples shall operate in a minimum temperature range of -22°F to 212°F with an accuracy of 1.8°F. The Contractor shall furnish a temperature logger that records the temperatures automatically at intervals not to exceed once per hour, performs digital temperature storage, and prints temperature data to a paper tape. The thermocouples shall be connected to the recording device using Teflon-sheathed wire or shall use wireless technology. The measuring tips of the thermocouples shall be located as far away from the reinforcing steel as is practical. The thermocouple tips shall be supported with wood or plastic dowels. Thermocouple wire, if used, shall be tied to reinforcing steel bars with plastic zip ties. The thermocouple wire, if used, shall be protected from abrasion and concrete tools by securing the wire to the undersides of reinforcing steel. Temperature data shall be furnished to the Engineer as required, with a minimum frequency of once per day.

2. Water Curing.

Curing of concrete shall begin by fog spraying immediately upon the disappearance of free bleed water on concrete surfaces not protected by forms. Fog spraying shall continue until the burlap cover has been placed. The amount of fog spray shall be strictly controlled, so that accumulations of standing or flowing water on the surface of concrete shall not occur.

Should atmospheric conditions render the use of fog spray impractical, the Contractor shall use plastic covers of suitable weight and securely weighed down, but not directly in contact with the concrete. The covers shall be used only until the initial set has taken place. The burlap covers shall be placed immediately thereafter. On the windward side of the panel being cured, the Contractor shall erect canvas barriers of suitable height when necessary to protect the curing concrete from the direct force of the wind.

The area of concrete to be cured shall be covered by wet burlap blankets placed as soon after concrete finishing as the Engineer determines will not cause damage to the concrete surface. However, in no case will the foregoing time period exceed 1 hour after placing of concrete. Fog spray or covers shall be used continuously during this period. The burlap shall be completely saturated over its entire area by being submerged in water for at least 8 hours before the scheduled start of the placement. The burlap shall be drained of excess water prior to application. The burlap shall be free from cuts, tears, uneven weaving and contaminants. The burlap shall be placed such that the edges are lapped a minimum of 6 in. Burlap shall be kept continuously wet and protected from displacement for the entire curing period in a manner acceptable to the Engineer.

The materials for the coverings shall conform to the pertinent requirements for the same provided under M9.06.3: Burlap. The coverings shall be kept thoroughly wet by sprinkling with a fine spray of water until they may be removed. Wooden forms without liners, if left in place longer than 2 days after the placing of the concrete, shall be thoroughly wet down at least once each day for the remainder of the required curing period. Formed surfaces shall, after the removal of forms, be cured in like manner for the remainder of the required period, the entire surface of the concrete being thoroughly drenched with water and covered immediately after the forms are removed. Portions of the covering material may be removed temporarily when and as necessitated by any required finishing or waterproofing operation.

3. Impervious Liquid Membrane Curing.

Immediately after the free bleed water has disappeared on surfaces not protected by forms and immediately after the removal of forms, if such are removed before the end of the required curing period, the concrete shall be sealed by spraying as a fine mist a uniform application of the membrane curing material in a manner as to provide a continuous uniform, water impermeable film without marring or otherwise damaging the concrete. The impervious liquid membrane material used shall conform to the requirements for the same provided under M9.06.5: Impervious Liquid Membrane except that only ASTM C1315, Type I shall be permitted.

The membrane curing shall be applied in one or more separate coats at the rate recommended by the manufacturer. If, in the Engineer's judgment, discontinuities or pinholes exist or if rain falls on the newly coated surface before the film has dried sufficiently to resist damage, an additional coat of the material shall be applied immediately to those affected areas at the specified rate. If a slight delay in application shall occur, which permits the concrete surface to dry, the surface of the concrete shall be thoroughly moistened with water, immediately prior to the application of the membrane curing material. Application of membrane curing may be delayed for 12 hours if the concrete surface is protected and kept moist by the use of wetted burlap.

The membrane compound shall be thoroughly agitated immediately before application. The liquid shall be applied under pressure by means of an approved pressure spray which shall be held not more than 2 ft away from the concrete surface and the spray protected from any wind by suitable means as may be necessary, so as to apply the material directly onto the concrete surface.

The sprayed surface film shall be protected from abrasion or damage for the duration of the required curing period. The placing of materials or unnecessary walking on the surface will not be allowed until the film is at least 2 days old; and then only if no damage is caused to the surface film during the required curing time.

4. Curing by Other Methods.

a. Waterproof Paper. Subject to approval by the Engineer, waterproofed paper may be used for curing particular surfaces of concrete and, if allowed, shall be furnished and used entirely in accordance with the provisions for such under 476.71: Curing, except that the length of time for the curing period shall be as specified herein.
b. Other methods of curing may be used only when approved in writing by the Engineer prior to any use in the work.

901.66: Placement, Finishing and Curing of Concrete Bridge Decks

This work shall consist of the placement of concrete bridge decks by using self-propelled finishing machines, all as indicated on the Plans and in accordance with these Specifications.

A. Placement and Curing Plan Submission Requirements.

At least 30 days prior to the proposed start of placing the concrete bridge deck, the Contractor shall submit to the Engineer for approval a Placement and Curing Plan that will specify all of the steps, methods, equipment and personnel that Contractor shall use to construct the concrete deck in compliance with these specifications. Approval of this plan will not relieve the Contractor of the

responsibility for the satisfactory performance of his/her methods and equipment. The Placement and Curing Plan shall, at a minimum, specify:

1. The method that will be used to convey the concrete from the truck to all locations on the deck where it will be placed. This will also include the conveyance equipment, rate of concrete placement and the estimated time for the completion of all concrete placement, consolidation and finishing operations up to the start of curing.
2. The type and number of finishing machines and work bridges including the plan for erecting the rails and operating the finishing machine. This will include proof of the following minimum operator qualifications for the bridge deck finishing machine:
    a. Five years' experience operating machines or similar type and manufacturer as that proposed.
    b. Proof of no less than five bridge decks of similar size, placed using a machine of the same manufacturer as that proposed.
    Or, as a substitute for a. and b.:
    c. A representative of the manufacturer of the bridge deck finishing machine shall be present on the site a minimum of 24 hr in advance of the proposed deck placement to approve the setup of the machine and rail system, and the representative shall be present for the entire duration of the placement of the deck concrete using the bridge deck finishing machine.
3. The sequence of concrete pours, including any retarders or other concrete admixtures and dosage rates required to complete the placement, consolidation and finishing operations prior to curing in accordance with the Contractor's intended sequence of operations.
4. The provisions for consolidating the concrete including the number of vibrators and number of personnel that will be dedicated exclusively for this operation
5. The method for curing the concrete deck. This will include the number of personnel that will be exclusively dedicated for this operation, the means for pre-wetting the burlap, the location of the wet burlap at the work site, the means for conveying the wet burlap to the work bridges and the amount of wet burlap that will be required to completely cover the deck. It shall also include a letter certifying that the fogging equipment produces atomized water droplets with an average droplet diameter of 0.003 in. or less that are uniformly distributed at a rate of at least 0.10 gallons/square foot/hour .
6. Consideration of weather conditions that can be anticipated at the time of placement of the deck concrete. When cold weather can be reasonably expected either within 7 days before the anticipated concrete placement, or during the 14 day wet curing period, the Contractor shall include detailed procedures for the production, transportation, and placement of the concrete, including: provisions for enclosures to protect the placed concrete, including a plan of heating devices, types and locations around structure and the means for holding the enclosure securely in place; cold weather curing procedures; and the means for monitoring the temperature of concrete during cold weather.
7. Equipment that will be used to measure ambient air temperature, concrete temperature and relative humidity of the air at the construction site.
8. The number of all other personnel, in addition to the ones already identified in bullets 4 and 5, who will be engaged in the concrete placement operation and their assigned tasks. All personnel, including the ones already identified in bullets 4 and 5, shall have the experience and skills appropriate to their working assignment.
9. A contingency and backup plan in case of equipment failure.

A pre-placement meeting shall be held between the Contractor and the Engineer at least 2 weeks prior to the start of any concrete placement for the deck slab. The Contractor and the Engineer shall review all aspects of the approved Placement and Curing Plan.

Twenty four hours before the scheduled start of concrete placement, the Engineer shall verify that all equipment and materials identified in the Placement and Curing Plan are onsite and have been tested to insure that they are in working order and are functioning as required. Upon the successful completion of this verification, the Engineer shall allow the concrete placement to proceed. If any equipment or material such as burlap is missing or equipment is malfunctioning, the concrete placement operations shall be canceled and shall not be re-scheduled until such time as the missing equipment or material is delivered to the site or the equipment has been repaired and is demonstrated to be in working order and functioning as required. The Contractor shall be responsible for any costs associated with the cancellation and rescheduling of the concrete placement operation that is due to missing equipment or material or malfunctioning equipment.

B. Limitations on Placement.

The requirements of 901.64: Protection from Adverse Weather, shall be satisfied in addition to the requirement of this section. Cement concrete for bridge decks shall not be placed when the ambient air temperature exceeds 85°F or is expected to exceed 85°F during the placement of the deck.

The evaporation rate of the exposed concrete surface shall not exceed 0.15 psf per hour. The deck surface evaporation rate shall be determined in accordance with Figure 901.66-1, obtained from ACI 305R-10.

The contractor shall determine the evaporation rate by measuring the ambient air temperature, relative humidity of the air at the construction site and concrete temperature prior to the placement of concrete and every hour thereafter until the end of the concrete placement, consolidation and finishing operation. Concrete temperature will be taken from the same sample used for slump and air content tests. To document the readings, Form 901.66 Bridge Deck Placement Environment will be provided by the Engineer and shall be filled out by the Contractor and returned to the Engineer.

The Contractor must provide suitable equipment and take appropriate actions as approved by the Engineer to maintain limit the evaporation rate to 0.15 psf per hr or less including one or more of the following actions:

1. Misting the surface of the concrete with pressurized equipment that consists of at least two portable pressure washers, not attached to the finishing machine, and manually operated by personnel dedicated to performing fogging until the curing cover is applied. Water that drips from the nozzles shall not be allowed to fall onto the concrete that is being cured. The water mist shall be distributed at a rate of at least 0.10 gal/ ft^2/hr. For example, on a deck that is 30 ft wide, the system must be able to apply at least 3.0 gal of water per linear foot per hr. The nozzles must produce an atomized fog mist that will maintain a sheen of moisture on the concrete surface without ponding. The atomized water droplets shall have an average droplet diameter of 0.003 in. or less. The area of coverage from each nozzle shall overlap all adjacent coverage areas by at least 12 in.

2. Construct windscreens or enclosures to effectively reduce the wind velocity throughout the area of placement. If the use of windscreens is required, the windscreens shall consist of canvas barriers of suitable height erected on the windward side of the concrete placement.
3. Reduce the temperature of the concrete.
4. Reschedule the placement until such time as the environmental conditions are acceptable, such as at night or during early morning hours.

Figure 901.65-1: Deck Surface Evaporation Rate

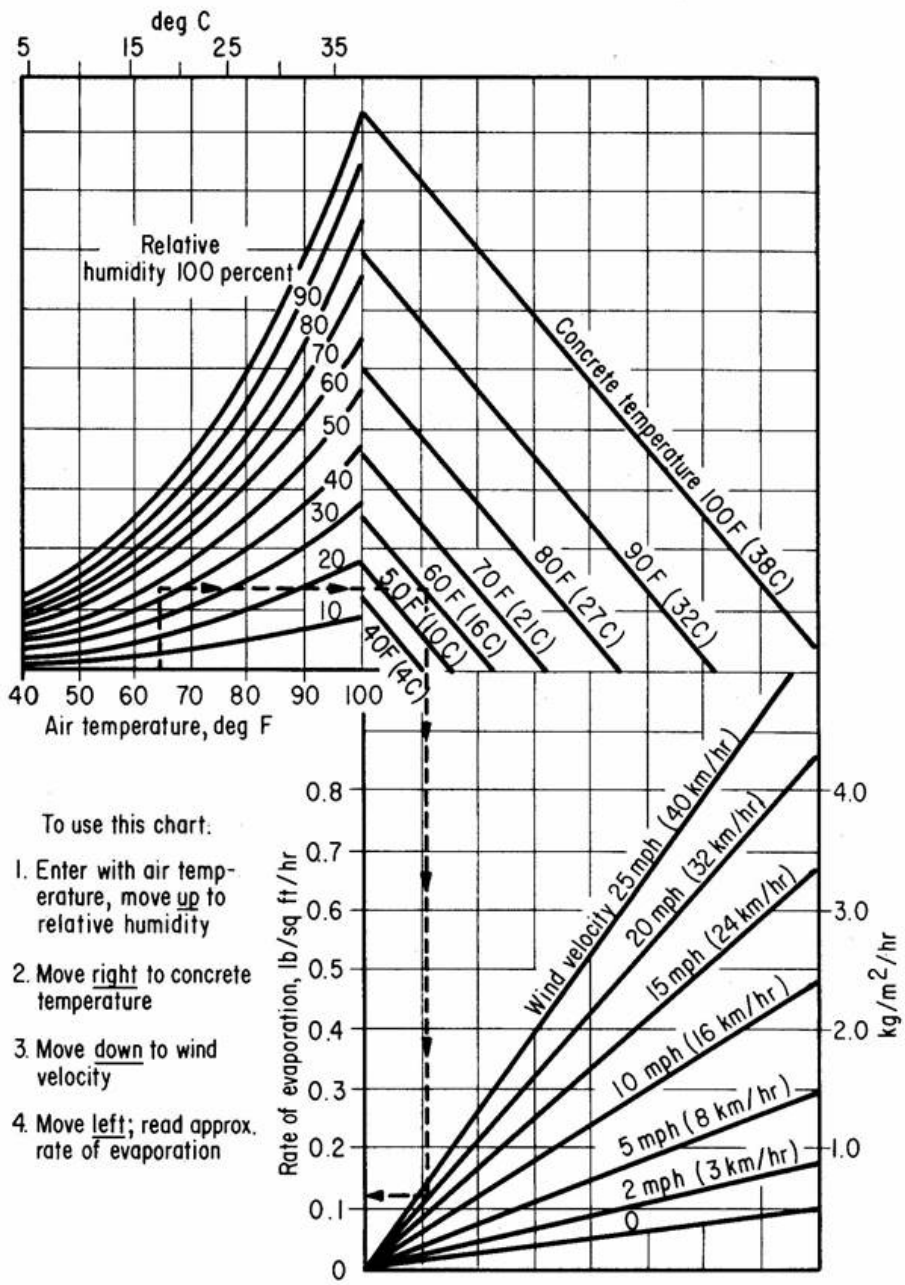

C. Placement.

Concrete placement shall take place during daylight and shall not begin unless the Contractor is certain that the placement can be completed and finished, to the satisfaction of the Engineer, during daylight hours. The Engineer may waive this requirement if adequate and approved lighting facilities are provided by the Contractor prior to the start of the deck placement. Before concrete placement operations begin substantial bulkheads or headers shall be shaped to the required deck surface cross-section. In the event of unforeseen circumstances should the concrete placement be forced to cease, sufficient bulkheads shall be installed at locations determined by the Engineer and the concrete placement shall be discontinued. All concrete in place beyond the bulkhead shall be removed. Concrete placement will recommence only with the approval of the Engineer. The concrete shall be placed as a monolithic unit in a continuous operation between joints. A minimum rate of placement of 35 yd^3 per hour shall be maintained at each finishing machine.

D. Consolidation.

The concrete shall be consolidated by means of approved high frequency internal vibrators (9,000 to 12,500 vibrations per minute in concrete) that shall be applied in a manner to ensure the consolidation of the concrete throughout the full depth of the deck in advance of the finishing machine. The Contractor shall use rubber vibrator heads or take other approved preventive measures to ensure that the vibrators will not damage the epoxy coated reinforcement. The Contractor shall have approved vibrators in service for each placement operation in accordance with Table 901.66-1. The backup vibrator shall be fully functional and shall be on site and available in case of equipment failure.

Table 901.66-1: Minimum Number of Internal Concrete Vibrators Required

Concrete Placement Rate	Number of Vibrators Required to be In Service	Total Number of Vibrators Required Including Backup
35 yd^3 to 60 yd^3 per hr	3	4
Greater than 60 yd^3 per hr	4	5

These vibrators shall be in operation in addition to the surface vibratory action from the vibrating pan(s) of the finishing machine. Consolidation by the vibrators shall leave the concrete free from voids and insure a dense surface texture, but the vibration of the concrete shall not be continued so long as to cause segregation or bleeding. A small uniform quantity of concrete shall be maintained ahead of the screed on each pass. At no time shall the quantity of concrete carried ahead of the screed be so great as to cause slipping or lifting.

E. Finishing.

1. General.

Methods, procedures, and equipment shall be used which will insure a uniform riding surface without over-vibration or segregation of the components of the concrete. The leading edge of freshly placed concrete shall at all times be maintained approximately parallel to the finishing machine.

The weight of the finishing machine(s) shall not cause unaccounted deflection of the bridge members or falsework. The machine shall travel on steel rails, pipe or other approved grade

control, which shall be supported by vertical supports securely fastened in place at a maximum spacing of 2 ft to prevent any appreciable deflection between rail supports. Screed rail supports may be located inside or outside of the placement width. Prior to placing the concrete, screed rails shall be completely in place, and accurately set to insure finishing of the concrete deck surface to the elevations shown on the Plans. The supports for the rails, if embedded in the deck concrete, shall be of the type that can be removed without disturbing the concrete.

Screed rails shall be set entirely above the finished surface of the concrete and shall be supported in a manner approved by the Engineer. Where stud type shear connectors are available, welding to the studs will be permitted. Where no studs are available, other means of attaching the screed rail supports shall be provided. No welding will be permitted directly on stringer or girder flanges or cover plates in tension areas, nor in areas subject to stress reversal, for attaching either screed rail supports of any type. Any welding in compression areas shall be approved by the Engineer.

Screed rail supports set in the concrete shall be so designed that they may be removed to at least 2 in. below the surface of the concrete. Voids created by removal of the upper part of the screed rail supports shall be filled with mortar having the same proportions of sand and cement as that of the slab or wearing surface. The mortar shall contain an approved additive in sufficient proportions to produce non-shrink or slightly expansive characteristics. Screed rail supports shall not be treated with parting compound to facilitate their removal. Rails for finishing machines shall extend beyond both ends of the scheduled length for concrete placement. The extended length shall be of sufficient distance to allow finishing machine(s) to clear the concrete to be placed.

2. Finishing Machine: Placement Widths Less Than or Equal to 15 Fee) or Bridge Lengths Less Than or Equal to 50 Ft.

For concrete deck placements specified to be less than or equal to 15 ft in width, or less than or equal to 50 ft in total bridge length, the finishing machine shall be a lightweight vibrating screed with the following features:

a. It shall be portable and easily moved, relocated, or adjusted by no more than four persons.
b. The power unit shall be operable without disturbing the screeded concrete.
c. It shall be self-propelled with controls, that will allow a uniform rate of travel and by which the rate of travel can be increased, decreased, or stopped.
d. It shall have controlled, uniform, variable frequency vibration, end to end.
e. It shall be fully adjustable for flats, crowns, or valleys.
f. The screed length shall be adjustable to accommodate the available work area.

The finishing machine shall be operated over the full length of the bridge segment to be finished prior to beginning of concrete placement operations. The test run of the self-propelled finishing machine shall be performed in the presence of the Engineer at least 24 hours in advance of the concrete placement with the screed adjusted to its finishing position. During the test run, checks shall be made of the deflection due to the finishing machine, adjustment of guide rails and required covers for slab reinforcement. The required concrete cover over the top bars shall be checked by riding the screed over the bars and measuring the cover over the slab reinforcement. Discrepancies so found, which are in excess of the tolerances shall be rectified to secure the required concrete cover. All necessary corrections shall be made before concrete placement is begun.

The rate of concrete placement shall be coordinated with the initial strike-off so that the initial strike-off is never more than 10 ft behind the concrete placement.

Sufficient depth checks shall be made behind the machine(s) and along the full length of the span to insure achievement of the required section and reinforcement cover.

Improper adjustment or operation of the finishing machine(s) that results in inadequate reinforcement cover or smoothness shall be corrected immediately. Unsatisfactory performance, particularly with respect to the surface smoothness attained, shall be cause for rejection of the equipment and cement concrete placed.

3. Finishing Machine: Placement Widths Greater Than 15 Ft and Bridge Lengths Greater Than 50 Ft.

An approved bridge deck finishing machine(s) complying with the following requirements shall be used for consolidating, striking off, and finishing the concrete deck surface for concrete placements greater than 15 ft in width and bridge lengths greater than 50 ft. The finishing machine(s) shall have the necessary adjustments, built in by the manufacturer, to produce the required profile grade, cross-section, and surface smoothness. The supporting frame shall span the section being cast in a transverse direction without intermediate support. The finishing machine(s) shall be self-propelled and capable of forward and reverse movement under positive control. Provisions shall be made for raising all screeds to clear the screeded surface for traveling in reverse. The screed device shall be provided with positive control of the vertical position.

The finishing machine(s) shall be self-propelled with two or more rotating cylinder screeds. The rotating cylinder screeds shall rotate in a transverse direction while also traveling in the same direction and shall be operated transversely in overlapping strips in the longitudinal direction not to exceed 6 in. One or more powered augers shall be operated in advance of the screed(s) and a drag (pan type) float shall follow the screed(s). The surface of bridge decks that are to be left exposed without bituminous or cement concrete overlays shall receive an artificial turf drag made of molded polyethylene with synthetic turf blades that are approximately 0.5 in. long and with approximately 6,000 blades per ft^2 of drag. The artificial turf drag mat shall be removed and replaced with a clean artificial turf drag mat every 10 ft measured along the bridge centerline. The transversely operated rotating cylinders of the finishing machine(s) shall be rotated such that the direction of the rotation of the cylinders at the surface of the concrete is in accordance with the manufacturer's recommendations.

The finishing machine(s) shall be operated over the full length of the bridge segment to be finished prior to beginning of concrete placement operations. The test run of the self-propelled finishing machine shall be performed in the presence of the Engineer at least 24 hours in advance of the concrete placement with the screed adjusted to its finishing position. During the test run, checks shall be made of the deflection due to the finishing machine, adjustment of guide rails and required covers for slab reinforcement. The required concrete cover over the top bars shall be checked by riding the screed over the bars and measuring the cover over the slab reinforcement. Discrepancies so found, which are in excess of the tolerances shall be rectified to secure the required concrete cover. All necessary corrections shall be made before concrete placement is begun.

The rate of concrete placement shall be coordinated with the initial strike-off so that the initial strike-off is never more than 10 ft behind the concrete placement.

Concrete immediately in front of the power auger(s) of bridge deck finishing machine(s) shall be placed or cut to a depth no higher than the center of the rotating auger(s). The concrete shall be consolidated just prior to the auger strike off. In the case where the vibratory action of the finishing machine does not provide sufficient consolidation in accordance with the rate of placement, the Contractor shall utilize approved high frequency internal vibrators (9,000 to 13,500 vibrations per minute in concrete) that shall be applied in a manner to secure maximum consolidation of the concrete. Consolidation shall leave the concrete free from voids, but shall not be continued so long as to cause segregation or bleeding. The advance auger(s) shall strike off the concrete to approximately ¼ in. above the final grade and then the concrete shall be finished to final grade.

Improper adjustment or operation of the finishing machine(s) that results in inadequate reinforcement cover or smoothness shall be corrected immediately. Unsatisfactory performance, particularly with respect to the surface smoothness attained, shall be cause for rejection of the equipment and cement concrete placed.

4. Work Bridges.

Work bridges supported on the screed rails shall be provided by the Contractor in order to permit access to the surface of the deck for the purpose of finishing, straight-edging, making corrections, and setting curing materials. The Contractor shall furnish a minimum of two work bridges behind the bridge deck finishing machine, capable of spanning the entire width of the deck and supporting at least a 500-lb load without deflection to the concrete surface. These working bridges shall be available to the Engineer for inspection purposes. Workmen will not be permitted to walk in the fresh concrete after it has been screeded. All finishing work, including application of the fog spray and placement of curing mats, shall be performed from bridges supported above the deck surface.

5. Tolerances.

Verification that the completed surface of the deck has been constructed in accordance with the grades and cross slopes specified on the contract drawings shall be made immediately after finishing and again after the deck has been cured. The Contractor shall check the surface of the concrete with a 10-ft-long metal straightedge operated parallel and perpendicular to the centerline of the bridge. Deck surfaces that are not to be overlaid with 1 in. or more of wearing surface material shall show no deviation in excess of ¼ in. from the testing edge of the straightedge. For deck surfaces to be overlaid with 1 in. or more of wearing surface material, such deviation shall not exceed ⅜ in. The checking operation shall progress by overlapping the straightedge at least one half of the length of the preceding straightedge pass. Any area that requires finishing to correct surface irregularities shall be re-textured which may be performed with a hand-operated texture mat wrapped in a roll or attached to a round or curved shaped base. In the event that the tolerance is not met when tested after the concrete has hardened, variance in excess of ¼ in. in 10 ft deck surfaces not to be overlaid with 1 in. or more of wearing surface material or ⅜ in. for deck surfaces to be overlaid 1 in. or more of wearing surface material shall be marked and corrected at the Contractor's expense in a manner satisfactory to the Engineer. The Contractor shall correct out of tolerance hardened concrete surface irregularities by the use of concrete planing or grinding equipment that does not damage the remaining concrete or violate minimum cover requirements on steel reinforcement.

The straightedges shall be furnished and maintained by the Contractor. They shall be fitted with a handle and all parts shall be made of aluminum or other lightweight metal. The straightedges shall be made available for use by the Engineer when requested.

F. Curing.

All concrete bridge decks shall be kept wet with clean fresh water for a curing period of at least 14 days after placing of concrete.

Curing shall begin by fog spraying during the placing and finishing operations. Fogging shall continue and shall be applied continuously, rather than intermittently, after the finishing operation until wet covering material has been placed over the concrete surface.

All bridge decks, medians, sidewalks, and safety curbs shall be water cured only and shall be kept continuously wet for the entire curing period by covering with one of the following systems:

a. Two layers of wet burlap,
b. One layer of wet burlap and either a polyethylene sheet or a polyethylene coated burlap blanket.

Curing protection shall be applied within 15 minutes after the concrete is deposited and before the surface of the concrete has lost its surface "wetness" or "sheen" appearance. The burlap shall be completely saturated over its entire area by being submerged in water for at least 8 hours before the scheduled start of the placement. The burlap shall be drained of excess water prior to application. The burlap shall be free from cuts, tears, uneven weaving and contaminants. The burlap shall be placed such that the edges are lapped a minimum of 6 in. Continuous burlap wetting shall commence 10 minutes from the time it is placed and shall be kept continuously wet and protected from displacement for the entire curing period in a manner acceptable to the Engineer.

The covering of bridge decks, medians, sidewalks, and safety curbs shall be kept continuously wet for the entire curing period by the use of soaker hoses. The soaker hoses shall circulate water continuously and shall be located to insure a completely wet surface for the entire curing period.

The Contractor shall make sure that adequate personnel are available at the site to carry out the placement, screeding, finishing, fogging and curing operations simultaneously. To overcome shrinkage problems, the use of wind screens and sun shades shall be used as conditions require.

The application of impervious liquid membrane curing compounds shall not be considered a substitute for achieving the curing of the concrete required by these Specifications. Only in the event of an unavoidable delay during concrete placement shall two coats of an approved curing compound be sprayed on to the concrete that has been deposited and not screeded. The curing compound shall conform to the requirements provided under M9.06.5: Impervious Liquid Membrane, except that only ASTM C1315, Type I shall be permitted. This curing compound shall later be mixed into the concrete by the finishing machine. Curing compounds shall not be applied to the screeded surfaces of bridge decks.

The Contractor shall limit the maximum concrete temperature to 154°F, and control the temperature of the concrete to ensure that it does not fall below 57°F. Heat control shall be accomplished through a combination of proper cement concrete ingredient selection to minimize heat generated, pre-placement cement concrete ingredient cooling, post-placement cooling, cement

concrete placement rate control, cement concrete surface insulation to minimize heat loss, and providing supplemental heat to prevent heat loss.

The Contractor shall submit for review and approval by the Engineer at least 30 days prior to the date of intended cement concrete placement, along with each mix design, a plan indicating methods of observing and recording cement concrete temperatures. The Contractor shall measure and record concrete and ambient air temperatures on an hourly basis for at least the first 72 hours after placement or longer during hot or cold weather conditions. The Contractor shall furnish temperature log records of the temperatures that are recorded at a maximum frequency of once per hour. Temperature data shall be furnished to the Engineer as required, with a minimum frequency of once per day.

G. Cold Weather Requirements.

Cold weather is defined as any time during the concrete placement or curing period the ambient temperature at the work site drops below 40°F or the ambient temperature at the site drops below 50°F for a period of 12 hours or more. When cold weather is reasonably expected or has occurred within 7 days of anticipated concrete placement, the Contractor shall include in their Placement and Curing Plan detailed procedures for the production, transporting, placing, protecting, curing, and temperature monitoring of concrete during cold weather. Procedures for accommodating abrupt changes in weather conditions shall be included. Placement of concrete shall not commence until the plan is accepted by the Engineer. Acceptance of the plan will take at least one day. All material and equipment required for cold weather placement and curing protection shall be available at the project site before commencing concrete placement. All snow, ice, and frost shall be removed from the surfaces, including reinforcement, against which the concrete is to be placed. The temperature of any surface that will come into contact with fresh concrete shall be at least 35°F and shall be maintained at a temperature of 35°F or above during the placement of concrete.

During the curing period, the Contractor shall provide suitable measures to maintain the concrete surface temperature between 57°F and 85°F which shall be monitored by continuously recording surface temperature measuring devices that are accurate within 1.8°F. At least one temperature measuring device shall be randomly placed in an accessible location for every 1,500 ft^2 of concrete deck surface area being cured.

The minimum concrete surface temperature requirement shall be continuously maintained for the entire 14-day wet curing period. Any day during which the minimum concrete surface temperature requirement of 57°F is not continuously maintained shall not count as a day contributing to the curing period.

If the concrete surface temperature falls below 45°F during the curing period, the structure shall be enclosed, and external heat shall be provided as directed by the Engineer. If external heat is required, the following shall apply:

1. The time required for tenting shall not be counted as curing time.
2. External heat shall be maintained on and below the structure for the entire curing period and then reduced gradually such that the uniform change in temperature does not exceed 5°F in one hour or 18°F in any 24-hour period.

If at any time during the curing period the concrete surface temperature falls below 35°F (2°C), the concrete will be inspected by the Engineer for possible damage due to exposure to freezing temperatures. Concrete determined by the Engineer to be damaged due to exposure to freezing temperatures will be considered as being unsatisfactory and rejected.

Adequate precautions shall be taken to protect the concrete deck from any damages resulting from severe weather conditions during the curing process.

H. Surface Texturing.

The final finish required shall be as follows:

1. The finished surface of bridge decks to receive bituminous or cement concrete overlays shall be smooth without any projections that could puncture the membrane waterproofing or depressions that could retain water.
2. Bridge decks that are to be left exposed without bituminous or cement concrete overlays shall receive an artificial turf drag finish and shall be grooved using multi-bladed self-propelled sawcutting equipment. Transverse grooves shall be sawcut no sooner than completion of the 14-day wet curing operation provided that the concrete has reached a compressive strength of 3,300 psi. The grooves shall be rectangular in shape, ⅛ in. wide (+ $^{1}/_{16}$ in., -0 in.) and $^{3}/_{16}$ in. deep (± $^{1}/_{16}$ in.). The grooves shall be cut at a variable spacing measured from the centerline of grooves as follows: ¾ in., 1 ⅛ in., ⅝ in., 1 in., ⅝ in., 1 ⅛ in., and ¾ in. in 6-in. repetitions across the width to be grooved in one pass of the mechanical saw device. One 6-in. sequence may be adjusted by one-quarter sequence increments to accommodate various cutting head widths provided the general pattern is carried out. The tolerance for the spacing of the grooves is ± $^{1}/_{16}$ in.

The groove sawcutting equipment shall have a depth control device that will detect variations in the surface profile and adjust the cutting head height to maintain the depth of groove specified. The groove sawcutting equipment shall be provided with devices to control the alignment. Flailing type grooving that is uncontrolled and erratic shall not be permitted. Grooves shall be cut continuously across the roadway, perpendicular to the centerline of the roadway, and shall stop 1 ft from the curb line. Grooves shall be continuous across construction joints. At skewed metal bridge deck expansion joints and at the skewed ends of bridge decks, the groove cutting shall be adjusted by using narrow width cutting heads so that all grooves end within 6 in. of the edge of deck joint measured normal to the centerline of joint or end of deck. No un-grooved deck surface greater than 6 in. in width shall remain. A minimum clearance of 1 in. shall exist between the first groove and the end of deck or edge of metal bridge deck expansion joint. No overlapping or repeating of grooving in the same location by the grooving machine shall be permitted. The pattern of grooving shall be discussed and agreed upon with the Engineer before grooving begins. Debris and residue from the grooving operation shall be continuously removed and disposed of offsite. Residue from grooving operations shall not be permitted to flow into gutters or drainage facilities. The surface of exposed concrete decks shall be left in a washed clean condition that is free from all slipperiness from the sawcutting slurry.

A 1-ft wide margin shall be finished adjacent to curbs with a magnesium float.

I. Sidewalks and Medians on Bridges.

After being placed, the horizontal concrete surfaces shall be properly screeded and finished to true grade and surface. The finish shall be with an approved float, followed by light brushing with a fine brush but without the addition of any water to remove the cement film, leaving a fine grained, smooth but sanded texture. The surfaces shall then be cured as specified herein.

901.67: Removal of Forms, Falsework and Loading on Structures.

The terms falsework and centering, as used herein, shall include all supports of the actual forms enclosing and supporting the concrete.

No external loads of any kind, except as provided for herein, shall be allowed until the members reach at least the designated strengths.

A. Removal of Forms and Falsework.

The forms, falsework, and centering for any portion of the structure shall not be removed until the concrete is strong enough, as determined by the Engineer, to avoid possible injury from such removal. Forms, falsework, and centering shall not be removed or disturbed without the prior approval of the Engineer. Forms, falsework, and centering shall be removed in such a manner as to permit the concrete to uniformly and gradually take the stresses due to its own weight.

When test cylinders are taken from the concrete in the members of a structure for the purpose of controlling the timing of form removal operations, the forms shall be left in place until the concrete has attained the minimum percentage of the specified design strength and, regardless of the strength attained, for the minimum period of time with test cylinder testing as designated in the following table. If test cylinders are cast for this purpose, 3 concrete cylinders shall be cast, field cured, and tested by the Contractor at an independent testing laboratory that is certified under the AAP, all at no additional cost to the project. When test cylinders are not taken from the concrete in the members of a structure for the purpose of controlling form removal operations, the minimum days without test cylinder testing designated in the following table shall be used as a guide. The number of days counted shall be measured from the time of the last placement of concrete in the forms or falsework supports and shall exclude days when the surrounding temperature is below 40°F for a total of 4 hours or more. The complete curing process shall be continued after removal of forms, falsework, or centering as required. In order to facilitate any particular finishing operations, side forms carrying no load may be removed 24 hours to 72 hours (depending on weather conditions and type of concrete) after the placing of the concrete has been completed, subject to the approval of the Engineer and with the complete curing process to be continued as required.

Table 901.67-1: Minimum Design Compressive Strengths

Structural Member	Minimum Percentage of Specified Design Compressive Strength (f_c)	Minimum Days with Test Cylinder Testing	Minimum Days without Test Cylinder Testing
Free standing walls, columns, and piers	40%	3 days	5 to 7 days
Arches	80%	10 days	14 to 28 days
Beams, pier cap beams, slabs, and girders with under 20 ft clear span between supports	80%	10 days	14 to 28 days
Beams, pier cap beams, slabs, and girders with 20 ft or greater clear span between supports	90%	14 days	21 to 28 days
Cantilevered beams, slabs, and girders	90%	14 days	21 to 28 days

Where continuous span structures are involved, the forms or falsework shall remain in place until the concrete in every span of the entire group of continuous spans has attained the minimum percentage of the specified design compressive strength.

Any defective work discovered after the forms have been removed shall be immediately removed and replaced. If the surface of the concrete is bulged, uneven or show excessive voids or form joint marks that cannot be repaired satisfactorily, the entire section shall be removed and replaced. All repairs and renewals due to defective work shall be done at the expense of the Contractor.

Any proposal by the Contractor to remove forms, falsework, and centering prior to the concrete attaining the specified minimum percentage of the design compressive strength must satisfy each of the following requirements:

The Engineer has reviewed and approved the Contractor's justifying calculations. The calculations must be based upon the concrete strength from the time of the proposed early removal until the concrete has attained its design strength. The calculations shall demonstrate that the capacity of the structure shall not be exceeded by computing the loads, resultant stresses, and deformations to which the concrete and reinforcing steel will be subject to at the time of the proposed removal.

The Contractor has had 3 field cured concrete cylinders tested by an independent testing laboratory immediately prior to the start of removal of forms, falsework, and centering, and all of the test results equal or exceed the anticipated strength used in the Contractor's calculations. The Engineer must accept the field curing of the 3 test cylinders as being representative of the field curing of the production concrete in order for this approval to occur.

B. Application of External Loads.

Loads shall not be applied to concrete structures until the concrete has, as determined by the Engineer, attained sufficient strength so that damage will not occur.

Nothing, except for curing materials and related curing equipment and devices, may be carried on bridge decks until the entire 14-day wet curing operation is completed. A live load not exceeding 5,500 lb, operated at a speed not to exceed 5 mph, may be allowed on bridge deck concrete no sooner than completion of the 14-day wet curing operation provided that the concrete has reached a compressive strength of 3,300 psi. Full traffic loading shall not be allowed on bridge deck concrete until completion of the 14-day wet curing operation and until the concrete has reached its specified strength.

Precast concrete or steel beams or girders shall not be placed on substructure elements until the substructure concrete has attained 70% of its specified strength.

When the placement of backfill will cause flexural stresses in the concrete, the placement shall not begin until the concrete has reached not less than 80% of its specified strength.

901.68: Joints

A. Construction Joints.

Construction joints not shown on the plans shall not be permitted except in case of emergency as specified in Paragraph D hereinafter.

Concrete in structures shall be placed in such a manner that all construction joints shall be exactly horizontal or vertical, as the case may be, and that they shall be straight and as inconspicuous as possible.

All concrete placed between construction joints shall be placed in a continuous operation.

In order to allow for initial shrinkage, concrete shall not be placed against the second side of the construction joint for at least 3 days after that on the first side has been placed.

When making a horizontal construction joint, care shall be taken to have the concrete below the joint as dry as possible and any excess water or creamy material shall be removed before the concrete sets. Within 12 hours after the concrete below the joint has been placed, the top surface shall be thoroughly cleaned by the use of pressurized water blast and wire brushes and all laitance and loose material removed so as to expose clean, solid concrete. Care must be taken not to loosen any of the course aggregate in the concrete. If for any reason this laitance is not removed before the concrete has hardened in place, it shall be removed using such tools and methods as may be necessary to secure the results specified above. Immediately before placing concrete above the joint, the surface of the concrete below the joint that has been cleaned as specified above shall be thoroughly pre-wetted for a minimum duration of 12 hours. On all exposed surfaces, the line of the proposed joint shall be made truly straight by tacking a temporary horizontal straight edge on the inside of the form with its lower edge on the line of the joint and then placing the concrete sufficiently higher than this edge to allow for settlement. Immediately before placing the new concrete, the forms shall be drawn tightly against the concrete already in place.

In construction joints, approved waterstops of plastic material shall be placed not less than 3 in. from the face of concrete and shall extend a minimum of 2.5 in. into the concrete.

Prior to the use of plastic waterstops, the manufacturer's installation instructions shall be furnished to the Engineer.

B. Expansion Joints.

Expansion joints constructed in bridges, walls and other structures shall be of the thickness shown and as located on the plans. The joint filler shall be cut to the same shape as the area to be covered except that it will be ¼ in. smaller along all surfaces that will be exposed in the finished work. The filler shall be fixed firmly against the surface of the concrete already in place in such a manner that it will not be displaced when the concrete is deposited against it. When necessary to use more than one piece to cover any surface, the abutting pieces shall be placed in close contact and the joint between the separate pieces shall be covered with a layer of two-ply roofing felt, one side of which shall be covered with hot asphalt to insure proper adhesion. The ¼-in. spaces along the edges at exposed faces shall be filled with wooden strips of the same thickness as the joint material. These wooden strips shall be saturated with oil and have sufficient draft to make them readily removable after the concrete is placed.

Whatever material is used, the exposed edge of the filler shall be the finished edge as it comes from the fabricator in order to avoid exposure of material roughened by cutting. Each piece of filler shall be fastened to the concrete on one side of the joint with a single line of No. 10 gauge insulation nails 3 in. long and 12 in. on centers.

Immediately after forms are removed, the expansion joint shall be carefully inspected and any concrete or mortar that has sealed across the joint shall be cut neatly and removed. The outer edge of the joint shall be straight, parallel and satisfactory in appearance.

In expansion joints, approved waterstops of plastic material shall be placed not less than 3 in. from the face of the concrete and shall extend a minimum of 4.5 in. (115 mm) into the concrete, measured from the center line of the joint.

Prior to the use of plastic waterstops, the manufacturer's installation instructions shall be furnished to the Engineer.

All surfaces to which sealants are to be applied shall be thoroughly cleaned to remove all loose concrete, dirt, oil, grease, paint, lacquer, rust, scales, bituminous or other foreign materials. Projections of concrete into joint space shall be removed. Steel surfaces shall be sandblasted or mechanically brushed to obtain a bright, clean, metal surface. Loose particles or dirt shall be removed, and the joint shall be dried before application of primer and/or sealer. A bond breaker shall be used so that the joint sealer shall not be placed in direct contact with bituminous material or bituminous filler.

A primer shall be used, when so designated in the manufacturer's instructions. The sealant shall be mixed and applied in accordance with the manufacturer's instructions. Application shall be made only when air temperature is 50°F or over. The sealant shall be installed in a neat and workmanlike manner to the depth specified on the plans. The sealant surface shall be either flush with, or be not more than, ⅛ in. above adjacent joint surfaces.

Any material that does not adhere or bond to the applied surface, or fails to set up properly, will be removed and replaced at the expense of the Contractor. Any material improperly mixed or which sets up before placement will likewise be rejected and be replaced at the expense of the Contractor.

Bonded closed cell joints shall consist of a watertight wear resistant joint system located within the joint gap as shown on the plans. The joint system shall be installed after the adjacent concrete

structures have cured for a minimum of 14 days. The joint seal shall be installed in widths which are 20% to 25% wider than the joint gap defined on the plans. The joint seal shall be uncoiled from the shipping packaging and shall be allowed to reach a relaxed condition prior to installation. The following installation procedure shall be followed:

A. The joint seal shall be precut to the proper lengths with splices only at the corners. Corner splices shall be made by cutting the seals on a 45° miter, bonding adjoining sections together by applying an epoxy-based adhesive to the mitered faces and holding together for one minute, and letting the spliced section remain undisturbed for one hour prior to installation;
B. The ribbed or grooved areas of the seal shall be vigorously scrubbed with a conditioning agent using a stiff nylon brush;
C. The ribbed or grooved areas of the seal shall then be cleaned using clean absorbent white cotton rags;
D. All oil, grease, dirt, wax, curing compounds, and laitance shall be removed from the surfaces of the previously cast concrete prior to installation of the joint seal;
E. The two-components of an epoxy-based adhesive shall be thoroughly mixed in accordance with the manufacturer's recommendations;
F. The sidewalls of the joint interface shall be coated with the adhesive to a depth necessary to engage the lowest rib or groove of the joint seal;
G. The ribs or grooves of the joint seal shall be completely covered with the adhesive;
H. The joint seal shall then be inserted into the joint gap using a blunt tool to position the seal at the proper depth.

C. Bonding to Concrete Already Set.

In bonding new concrete to concrete already set, the surface of the concrete shall be thoroughly cleaned, roughened, wetted with clean water, and then flushed with a mortar composed of equal parts of the cement and sand specified for the new concrete, before new concrete is placed adjacent thereto. New concrete shall be placed before mortar has taken initial set. In lieu of the mortar, an epoxy adhesive suitable for bonding fresh concrete to hardened concrete for load bearing applications may be used. The epoxy adhesive shall conform to AASHTO M 235M/M 235 Type V and shall be applied in accordance with the manufacturer's recommendations.

D. Emergency.

When the work of placing concrete is unexpectedly interrupted by breakdowns, storms or other causes and the concrete as placed would produce an improper construction joint, the Contractor shall construct a construction joint to the approval of the Engineer at no additional expense to the project. When such a joint occurs at a section on which there are shearing or flexural stresses, the Contractor shall provide an adequate mechanical bond across the joint by forming a key, inserting reinforcing steel or by some other satisfactory means, which will prevent a plane of weakness.

901.69: Weep Holes and Drains

Weep holes shall be provided through all structures as indicated on the plans and as directed. Ends of weep holes that are to be covered by filling material shall be protected by ¼-in. mesh galvanized wire screen 23 gauge and not less than 1 yd^3 of screened gravel or crushed stone conforming to M2.01.1.

Drains shall be provided for bridge superstructures as indicated on the plans.

901.70: Protection of Pipes and Conduits

The Contractor shall care for and protect from injury all pipes, wires and conduits encountered in the work by furnishing and maintaining suitable supports, including steel bars, where directed on the bridge during construction.

The Contractor shall provide suitable openings in the abutments, walls, piers, and superstructures as shown on the plans and as may be directed. If required, the opening shall be filled with brick masonry in a satisfactory manner.

901.71: Date, Seal, Bench Marks and Ornaments

A. Date.

The Contractor shall place a date on bridges as shown on the plans or as directed. The date used shall be the latest year of contract completion as of the date placement. The same date shall be used when placed at multiple locations on a given bridge. The date shall be cast or cut in masonry as directed. Detail drawings of the date will be furnished by the Department upon the request of the Contractor.

B. Seal.

If indicated on the plans, the Contractor shall place a bronze replica of the State Seal on Bridges, as directed by the Engineer. The seal will be furnished by the Department.

C. Ornaments.

Concrete ornaments shall be furnished and placed by the Contractor on bridges when indicated on the plans. The ornamental castings may be either cast in place or precast.

901.72: Concrete Penetrant/Sealer

Concrete penetrant/sealer shall be applied to cement concrete surfaces if shown on the plans. This work shall consist of furnishing all necessary labor, materials and equipment to treat concrete surfaces, including surface preparation and application.

The concrete penetrant/sealer shall conform to M9.15.0: Liquid Penetrant/Sealant. Clear concrete penetrant/sealers, after complete application, shall not stain or discolor the concrete. Application of the penetrant/sealer shall not alter the surface texture and shall be compatible with the use of surface finish coatings and/or caulkings. The surface shall dry to a tack free condition. Application of the penetrant/sealer shall be in accordance with the manufacturer's recommendations, including condition and preparation of surfaces to be treated and safety precautions.

The preparation process shall not cause any damage to the concrete surface, remove or alter the existing surface finish, or expose the coarse aggregate of the concrete.

The Engineer shall approve the prepared surface prior to application of the penetrant/sealer.

The Contractor shall prevent the penetrant/sealer from coming in contact with any joint sealers.

COMPENSATION

901.80: Method of Measurement

Cement Concrete will be measured by the cubic yard and the quantity shall be determined in accordance with dimensions shown on the plans and such alteration of the plans as are specifically ordered by the Engineer in writing. No deduction shall be made in bridges for rustications, chamfered corners of dimensions less than 4 in. on the square sides, or for the volume of pipes less than 18 in. in diameter, drainage inlets, or for anchor bolts or reinforcing bars. The volume occupied by pipe culverts in headwalls shall be deducted.

Underwater Foundation Inspection shall be measured by the Unit Day of Underwater Foundation Inspection ordered by the Engineer and actually performed at the work site by each Diver that is a Professional Engineer registered in the Commonwealth of Massachusetts. Each 8-hour period for which Underwater Foundation Inspection is performed as described above shall be measured as one Unit Day. Underwater Foundation Inspection that is performed as described above for less than 4 hours on a given work day shall be measured as one half of one Unit Day. Underwater Foundation Inspection that is performed as described above for more than 4 hours, but less than 8 hours, on a given work day shall be measured as one Unit Day. Underwater Foundation Inspection that is performed as described above for more than 8 hours on a given work day shall be measured by the quantity of Unit Days determined by the actual number of hours during which Underwater Foundation Inspection is performed divided by 8 hours for each Unit Day.

Reinforcement for Cement Concrete structures shall be measured by the pound. The weight of bars shall be the product of the length as shown on the approved shop drawings and schedules and the standard weight per foot of length as adopted by the Concrete Reinforcing Steel Institute. Mechanical splicers will be measured by the product of the weight per foot of the bar being joined and the length of an AASHTO Class C lap splice. Wire, metal clips, metal chairs or other fastening and supporting devices used for keeping the reinforcement continuous and in correct position will not be considered reinforcement and the Contractor will receive no additional compensation for their use.

The weight of wire mesh (incorporated in the structure) shall be the computed weight in accordance with the plans based on the standard weight accepted by the trade for the unit area of the particular mesh.

901.81: Basis of Payment

Cement Concrete will be paid for at the contract unit price per cubic yard under the particular item of Cement Concrete of the Class required, as shown on the plans or as directed, complete in place and accepted.

The Contractor shall have no claims for special allowances for extra cement or apparent shrinkage due to inaccurate proportioning or control, bulging of forms, spilling, waste or for any other project conditions within their control.

Payment for additional cement required to be used in proportioning by volume and in placing of concrete under water shall be included in the contract unit price paid for the particular designation of Cement Concrete specified or directed.

Underwater Foundation Inspection shall be paid at the contract unit price per unit day of Underwater Foundation Inspection ordered by the Engineer and performed by a Professional Engineer registered in the Commonwealth of Massachusetts. Written records, final reports, recommendations, travel time, and photographic documentation shall be considered incidental to Underwater Foundation Inspection and shall not be measured for payment.

Steel reinforcement including wire mesh will be paid at the contract unit price per pound complete in place including mechanical splicers, lap splices and proper coating of the bars and splices. Fastening devices and supports for keeping the reinforcement in the correct position are considered incidental to the steel reinforcement and shall not be measured for payment.

Galvanized steel curb bars and steel dowels will be paid for at the contract unit price per pound under the item for Steel Reinforcement for Structures.

The work specified under 901.69: Weep Holes and Drains, 901.70: Protection of Pipes and Conduits, 901.71: Date, Seal, Bench Marks and Ornaments, and 901.72: Concrete Penetrant/Sealer, shall be done without extra compensation except when openings for pipes, wires and conduits are required to be blocked up, the brick masonry will be paid for at the contract unit price per cubic foot of the kind of masonry in which the opening occurs.

Holes for dowels shall be drilled by the Contractor without extra compensation.

901.82: Payment Items

901.	4,000 psi 1.5-inch, 565 Cement Concrete	Cubic Yard
901.3	4,000 psi 1.5-inch, 565 Cement Concrete for Post Foundations	Cubic Yard
902.	3,500 psi 1.5-inch, 520 Cement Concrete	Cubic Yard
903.	3,000 psi 1.5-inch, 470 Cement Concrete	Cubic Yard
904.	4,000 psi ¾-inch, 610 Cement Concrete	Cubic Yard
904.1	5,000 psi, ¾-inch, 705 Cement Concrete	Cubic Yard
904.3	5,000 psi, ¾-inch, 685 HP Cement Concrete	Cubic Yard
904.4	4,000 psi ¾-inch, 585 HP Cement Concrete	Cubic Yard
905.	4,000 psi, ⅜-inch, 660 Cement Concrete	Cubic Yard
905.2	5,000 psi, ⅜-inch, 710 HP Cement Concrete	Cubic Yard
906.	5,000 psi, 1.5-inch, 660 Cement Concrete	Cubic Yard
909.9	Underwater Foundation Inspection	Unit Day
910.	Steel Reinforcement for Structures	Pound
910.1	Steel Reinforcement for Structures - Epoxy Coated	Pound
910.2	Steel Reinforcement for Structures – Coated	Pound
910.3	Steel Reinforcement for Structures – Galvanized	Pound

SUBSECTION 940: DRIVEN PILES

DESCRIPTION

940.20: General

This work shall consist of furnishing and driving piles to the required bearing capacity in accordance with these specifications and in close conformity with the lines and grades shown on the plans established by the Engineer.

The Contractor will be responsible for furnishing piling of sufficient length to obtain the penetration and bearing value required.

940.21: Pile Schedule

The Contractor shall submit to the Engineer, for approval, a schedule of the length of piles they propose to order, and the schedule shall designate the respective location of the piles. The scheduled length shall comprise the length expected to be left in the structure plus the length that might be necessary to provide fresh heading. When test piles and load tests are required, the data obtained from driving test piles and making test loads shall be used in conjunction with other available information to determine the lengths of piles to be furnished.

940.22: Precast-Prestressed Concrete Piles

A. Required Submittals.

The Contractor shall submit to the Engineer, shop drawings and design calculations which demonstrate the pile complies with the Contract documents. The drawings shall include a schedule of pile lengths, all structural, reinforcing and prestressing details, pickup points, and splice designs. All designs shall be in accordance with the latest AASHTO *Standard Specifications for Highway Bridges*.

B. Special Tips.

Piles driven to bed rock, into dense stratum or through strata with obstructions shall be equipped with embedded steel H sections or equivalent type protection to minimize damage to the pile tip.

C. Extensions.

Extensions on precast-prestressed piles shall be in accordance with details shown in the Contract Documents. The final cutting shall be perpendicular to the axis of pile at such an elevation that at least 40 diameters of reinforcing steel are exposed. The final cutting shall not cause undue spalling of the pile adjacent to the cut. Steel reinforcing and concrete for the extensions shall be of the same strength and quality as that used for the original pile.

MATERIALS

940.40: General

Piles shall meet the requirements specified in the following Subsection of Division III:

A. Materials

Untreated Timber Pile M9.05.6
Treated Timber Pile M9.05.6
Steel Pile M8.05.1
Steel Pipe Piles M8.05.5
Cast-in-Place Pile M8.05.2
Precast-Prestressed Concrete Pile M8.05.6
4,000 psi, ¾-inch, 610 Cement Concrete M4.02.00
Steel Reinforcement M8.01.0
Mortar M4.02.15

B. Length of Steel Pipe and H Piles.

When the proposed length is:

1. 60 ft or less, the pile shall be furnished in a single piece of the required length.
2. Greater than 60 ft, the Contractor will have the option of furnishing the pile in a single piece, or of furnishing each pile in 2 pieces, approximately equal in length, to make up the required length.
3. 100 ft or less, piles shall be spliced on the ground before being placed in the leads.

C. Length of Precast-Prestressed Concrete Piles.

1. 60 ft or less the pile shall be furnished in a single piece.
2. Greater than 60 ft, the Contractor shall have the option of furnishing the pile in a single piece or splicing 2 pieces approximately equal in length.

D. Storage and Handling of Piles.

Special care shall be used in the storage and handling of piles to avoid damage.

The method of handling of precast-prestressed concrete piling shall prevent cracking or fracture by impact or induced bending stresses. At the discretion of the Engineer, cracked or fractured piling shall be either rejected or repaired with epoxy. Fine cracks, which do not extend to the reinforcing steel as determined by the Engineer, will neither require repair or be cause for rejection. The Contractors proposed method for repair with epoxy or the like shall be submitted to the Engineer for approval.

E. Pile Shoes and Tips.

Pile shoes of the type and dimensions specified shall be provided and installed when shown on the contract documents.

Timber pile shoes shall be metal and be fastened securely to the pile. Timber pile tips shall be carefully shaped to secure an even uniform bearing on the pile shoes.

Steel pile shoes shall be fabricated from cast steel conforming to ASTM A27.

CONSTRUCTION METHODS

940.50: Equipment for Driving Piles

940.51: Hammers

A. General.

Piles shall be driven by approved impact hammers or by a combination of jetting and impact hammers. Impact hammers include single, double and differential acting air or steam hammers, and open or closed-end diesel hammers. Drop (Gravity) hammers may be used with the written permission of the Engineer to drive timber piles.

Valve mechanisms and other pans of impact hammers shall be maintained in good condition. Hammers shall be capable of delivering the manufacturer's rated energy and shall be operated at the manufacturer's specified maximum blows per minute. Power sources such as steam boilers and air compressors shall be capable of continuously maintaining the hammer manufacturer's recommended pressure and flow rate at the intake of the hammer. Boilers and Compressors shall be equipped with pressure gauges or other devices, calibrated against the rated hammer energy. When directed by the Engineer, a gauge readable from the ground surface, shall be provided at the hammer intake to determine the actual pressure delivered to the hammer.

The Contractor shall equip open-end diesel hammers with a calibrated scale to enable accurate observation of ram stroke from the ground surface.

The Contractor shall also provide the Engineer a chart from the hammer manufacturer equating stroke and blows per minute for the open-end diesel hammer to be used.

Double acting diesel hammers (closed-end) shall be equipped with a gauge to measure pressure in the bounce chamber. The gauge shall be readable from the ground surface. Alternatively, the gauge can be equipped with a hose sufficiently long to enable reading on the ground surface. The gauge and hose assembly shall be calibrated to allow for losses in the hose. The Contractor shall provide charts relating the throttle setting and/or bounce chamber pressure to rated hammer energy.

B. Minimum Energy Requirements

Hammers for Timber Piles.

Impact hammers shall have a ram weight of not less than 2,000 lb and shall develop not less than 6,000 ft-lb of energy per blow. When driving to final resistance, the total energy to drive the pile the last 6 in. shall not exceed 32,000 ft-lb times the pile tip diameter in inches.

Drop (Gravity) Hammers may be used only with the written permission of the Engineer. Such hammers shall weigh between 2,000 and 3,500 lb, but in no case shall the weight of the hammer be less than the combined weight of driving head and pile. The fall shall be so regulated as to avoid damage to the pile and in no case shall exceed 15 ft.

To control excessive stress in concrete piling during driving, the Engineer may require:

1. Increase in cushion thickness, or change the materials comprising the cushion;
2. Reduction of ram stroke;

3. Reduced ram stroke for driving through very soft soil and increased ram stroke as soil resistance increases;
4. Combination of increased cushion thickness and reduced ram stroke;
5. Combination of increased cushion thickness and shorter stroke; or
6. Use of pilot holes or jetting when driving through hard or alternating hard and soft strata.

C. Submittals.

The Contractor shall submit to the Engineer for approval, a description of the proposed driving equipment with manufacturer's specifications. The equipment description shall include hammer type, hammer cushion, drivehead, and pile cushion, etc. as contained in the "Pile and Driving Equipment Data Form" included in the contract documents or supplied by the Engineer.

D. Approval Criteria.

Impact hammers shall have an energy rating that will provide the required pile capacity with a penetration resistance between 3 and 15 blows per inch (BPI). The energy required for these rates shall be determined by the formula given in 940.61: Driven Pile Capacity, Paragraph A for piles with a required capacity less than 50 tons. For piles with required capacity over 50 tons, or as directed by the Engineer, the Contractor shall submit to the Engineer the results of a Wave Equation Analysis performed in accordance with 940.61: Driven Pile Capacity, Paragraph B for the proposed driving equipment. The analysis shall evaluate the acceptability of the driving equipment with regard to energy transfer to the pile top and the potential for impending pile damage due to induced driving stresses.

The pile stresses which are indicated by the wave equation to be generated by the driving equipment shall not exceed the values where pile damage impends, if the equipment is to be acceptable. That value is determined by the magnitude of the induced compressive stresses.

The point of impending damage in steel piles is defined herein as a compressive driving stress of 90% of the yield point of the pile material. For concrete piles, tensile stresses shall not exceed 3 multiplied by the square root of the concrete compressive strength (f_c) plus the effective prestress value, ($3 \times \sqrt{f_c} + prestress$) and compressive stresses shall not exceed 85% of the compressive strength minus the effective prestress value ($0.85 \times f_c - prestress$). For timber piles, the compressive driving stress shall not exceed three times the allowable static design strength listed on the plans. These criteria will be used in evaluating wave equation results to determine acceptability of the Contractor's proposed driving system. The results of the analysis, including input parameters, shall be subject to the review and approval of the Engineer prior to any pile installations.

The Contractor will be notified of the acceptance or rejection of the driving system within 14 calendar days of the Engineer's receipt of the "Pile and Driving Equipment Data Form." If the wave equation analyses show that either pile damage or inability to drive the pile with a reasonable blow count to the desired ultimate capacity will result from the Contractor's proposed equipment or methods, the Contractor shall modify or replace the proposed methods or equipment until subsequent wave equation analyses indicate the piles can be reasonably driven to the desired ultimate capacity, without damage.

Approval of the equipment by the Engineer will not relieve the Contractor of their responsibility to provide and install piles capable of supporting the design loads given on the contract documents.

940.52: Driving Appurtenances

A. Pile Helmet.

Piles driven with impact hammers require an adequate helmet to distribute the hammer blow to the pile head. The helmet shall be axially aligned with the hammer and the pile. The helmet should be guided by the leads and not be free-swinging. The helmet should fit around the head in such a manner as to prevent transfer of torsional forces during driving while maintaining proper alignment of hammer and pile.

1. For steel and timber piling, the pile heads shall be cut squarely and a helmet, as recommended by the hammer manufacturer, be provided to hold the axis of the pile in line with the axis of the hammer.
2. For precast concrete and prestressed concrete piles, the pile head shall be plane and perpendicular to the longitudinal axis of the pile to prevent eccentric impacts.
3. For special types of piles, appropriate pile helmets, mandrels or other devices shall be provided in accordance with the manufacturer's recommendations so that the piles may be driven without damage.

B. Bands.

Collars, bands, or other devices, to protect timber piles against splitting and brooming, shall be provided by the Contractor.

C. Hammer Cushion.

All pile driving equipment shall be equipped with a suitable thickness of hammer cushion material to prevent damage to the hammer or pile and to insure uniform driving behavior. Hammer cushions shall be made of durable, manufactured materials, provided in accordance with the hammer manufacturer's guidelines except that all wood, wire rope, and asbestos hammer cushions are specifically disallowed and shall not be used. A striker plate as recommended by the hammer manufacturer shall be placed on the hammer cushion to insure uniform compression of the cushion material. The hammer cushion shall be inspected in the presence of the Engineer when beginning pile driving at each substructure element or after each 100 hours of pile driving, whichever is less. Any reduction of hammer cushion thickness shall be replaced by the Contractor before driving is permitted to continue.

D. Pile Cushion.

The heads of concrete piles shall be protected by a pile cushion made of plywood or other similar material approved by the Engineer. The minimum plywood thickness placed on the pile head prior to driving shall not be less than 4 in. A new pile cushion shall be provided for each pile. In addition, during the driving of each pile, the pile cushion shall be replaced if during the driving the cushion is either compressed more than one half the original thickness or begins to burn. The pile cushion dimensions shall match the cross-sectional area of the pile top.

E. Leads.

The pile driver shall be equipped with fixed leads that are an integral part of the machine. The pile driving hammer shall ride in the ways of the leads. Fixed leads shall be used for driving all piles unless written approval is obtained from the Engineer.

F. Followers.

Followers shall only be used when approved in writing by the Engineer, or when specifically stated in the contract documents. The follower shall be of such material and dimensions to permit the piles to be driven to the length determined necessary from the driving of the full-length piles. The final position and alignment of the first two piles installed with followers in each substructure unit shall be verified to be in accordance with the location tolerances in this specification before additional piles are installed.

G. Jets.

Jetting shall only be permitted if approved in writing by the Engineer or when specifically stated in the contract documents.

Jetting will not be allowed when driving through newly placed embankment.

The use of water jets will be permitted only when excess of water will not affect adjacent structures. In general, jetting will not be permitted near railroad tracks.

When jetting is permitted, the Contractor shall determine the number of jets and the volume and pressure of water at the jet nozzles necessary to freely erode the material adjacent to the pile without affecting the lateral stability of the final in-place pile. The Contractor shall control, treat if necessary, and dispose of all jet water such as to meet environmental considerations. The Contractor shall be responsible for all damage to the site caused by jetting operations. The jetting plant shall have sufficient capacity to deliver at all times a pressure equivalent to at least 100 psi at two ¾-in. jet nozzles. Jet pipes shall be removed when the pile tip is a minimum of 5 ft above prescribed tip elevation and the pile shall be driven to the required bearing capacity with an impact hammer.

H. Preaugering.

Preaugering shall only be permitted if approved in writing by the Engineer or when specifically stated in the Contract documents. When permitted, the Contractor shall provide the necessary equipment such as augers, well drilling machines. etc. to preauger holes at pile locations and to the depths required by the Engineer.

PILE INSTALLATION

940.60: Preparation for Driving

A. Excavation.

When piles are located in an area where excavation is to be made or in an area where embankment is to be placed, the piles shall not be driven until the excavation has been made or the embankment has been placed. For either of the foregoing, the grade shall be brought to such an elevation as to compensate for possible uplift or subsidence of the surrounding earth. Adjustments in the grade

shall be made after all the piles at the location have been driven. Additional excavation or embankment will be considered as part of the process of pile driving and will not be included in the payment for either excavation or borrow.

B. Preaugering.

Where timber, cast-in place, precast-prestressed concrete piles, or steel piles are to be driven through an embankment, and the depth of the embankment at the pile location is in excess of 5 ft, the Contractor shall make a hole for the full depth of the embankment for each pile with an auger or by other approved methods. The hole shall have a diameter of not less than the bun diameter of the pile. After driving, the annular space around the pile shall be filled to the ground surface with dry sand, fine gravel or pea stone. Material resulting from drilling holes shall be disposed of in accordance with Subsection 120: Excavation.

940.61: Driven Pile Capacity

For piles with proposed capacities greater than 50 tons, the Ultimate Pile Capacity shall be determined by a Wave Equation Analysis conducted by a Registered Professional Engineer experienced in the method of analysis, at the expense of the Contractor. For piles with proposed capacities not greater than 50 tons, the Ultimate Pile Capacity may be determined by the following formula.

A. Formula Method.

$$R_u = 1.75\sqrt{E}\ log(10N) - 100$$

Where: $R_u = Ultimate\ Pile\ Capacity\ (kips)$
$E = Manufacturers\ rated\ energy\ of\ the\ hammer, at\ stroke\ observed\ in\ field, in\ foot - pounds$
$log(10N) = Logarithm\ to\ the\ base\ 10\ of\ the\ quantity\ 10\ multiplied\ by\ N,\ the\ number\ of\ hammer\ blows\ per\ inch\ at\ final\ penetration\ (blows\ per\ inch).$

The above formula is applicable only when:

(a) A follower is not used.
(b) The hammer is operated within the range established by the manufacturer.

On projects designed using the Service Load Design Method (Allowable Stress Design), a Design Safety Factor of 3.5 is to be used when using this formula to determine the required Ultimate Pile Capacity. For example, if a Design Capacity of 50 tons is required, then an Ultimate Pile Capacity of 175 tons should be used in the formula to determine the necessary hammer blow count. On projects designed using the Strength Design Method (Load Factor Design), the Performance Factor and Factored Design Capacity specified on the plans shall be used when using this formula to determine the required Ultimate Pile Capacity. For example, if a Factored Design Capacity of 35 tons is required and the Performance Factor specified on the plans is 0.35, then an Ultimate Pile Capacity of 100 tons should be used in the formula to determine the necessary hammer blow count.

The above formula may be modified by the Engineer if they deem it necessary on the basis of information obtained from a loading test or dynamic field measurements during pile driving.

B. Wave Equation Method.

When required in the contract documents, the ultimate pile resistance shall be determined by the Engineer based on a wave equation analysis. Piles shall be driven with the approved driving equipment to the ordered length or other lengths necessary to obtain the required ultimate pile resistance. Jetting, preaugering or other methods to facilitate pile penetration, shall not be used unless specifically permitted either in the contract documents or approved by the Engineer after a revised driving resistance is established from the wave equation analysis. Adequate pile penetration shall be considered to be obtained when the specified wave equation resistance criteria is achieved within 5 ft of the tip elevation based on ordered length. Piles not achieving the specified resistance within these limits shall be driven to penetrations established by the Engineer.

The Contractor is required to perform a wave equation analysis upon each pile type, each pile size, at each significant variation in soil profile, and at each pile driven for the static load test as shown on the plans. When dynamic load tests are required than a wave equation analysis must be performed for each pile to be dynamic load tested by the "Pile Driving Analyzer" (PDA) as determined by the Department. The wave equation analysis shall be made as outlined in the FHWA publication *Design and Construction of Driven Pile Foundations*.

If more than one driving system is proposed by the Contractor, a wave equation analysis shall also be made for each driving system. The driving system, as detailed on the "Pile Driving and Equipment Data Form," shall be completed by the Contractor and furnished for use as wave equation input data.

No change in driving equipment will be permitted after an evaluation by the Wave Equation Method without prior approval of the Engineer and a revaluation of the driving system. The Engineer may modify the results from the Wave Equation Analysis, if they deem it necessary on the basis of information obtained from loading tests or dynamic field measurement.

The wave equation analysis will be performed by an engineer, registered with the Commonwealth of Massachusetts as a Professional Engineer and experienced in such work. The Contractor's engineer shall be experienced in the performance of the wave equation analysis and its function as related to pile capacity determination. The Contractor's engineer conducting the wave equation analysis shall be thoroughly familiar with the Geotechnical report for the project, the subsurface conditions at the site, and with the proposed foundation design.

The Contractor shall submit a written report with a summary of each wave equation analysis to the Department at least 2 weeks prior to pile driving. That submission shall include a copy of the entire Wave Equation Analysis Program (WEAP) in the form specified in *Design and Construction of Driven Pile Foundations*. The summary in the report will contain the plotted curves (3) of ultimate resistance vs. blowcount and compressive stresses vs. blowcount and tensile stresses vs. blowcount for each WEAP output for each embedded length and for several stroke-lengths if a variable stroke (diesel) hammer is used.

The Contractor's engineer conducting the wave equation analysis shall also be the same engineer to conduct the dynamic load tests with the PDA when the Contractor is required to perform such dynamic load tests.

940.62: Pile Load Tests

A. General.

The piles to be tested shall be driven in accordance with the requirements under the item for the type of pile to be used on the project. These tests shall be made before driving production piles.

Each pile to be tested shall be driven to the design load as determined by either the Formula in 940.61: Driven Pile Capacity, Paragraph A, or a Wave Equation Analysis in accordance with 940.61: Driven Pile Capacity, Paragraph B and, at the discretion of the Engineer, by dynamic pile measurements in accordance with 940.62: Pile Load Tests, Paragraph C.

B. Static Tests.

Static pile load tests shall be conducted in accordance with ASTM D1143, "Standard Method of Testing Piles under Static Axial Compressive Load," except as modified herein.

1. General.

The top elevation of the test pile shall be determined immediately after driving and again just before load testing to check for heave. Any pile which heaves more than ¼ in. shall be redriven or jacked to the original elevation prior to testing. A minimum 3 day waiting period shall be observed between the driving of any anchor piles or the load test pile and the commencement of the load test.

Tell-tales shall be installed in all test piles to determine the percent of the applied test load being transferred to the bearing stratum. Number and location of tell-tales shall be as shown on the plans.

The Department will furnish levels and the personnel necessary to make all evaluations. All measuring devices and gauges that will be required, other than levels, shall be furnished by the Contractor.

Readings of settlement and rebound shall be referred to a fixed benchmark and shall be made using at least 2-micrometer dial extensometers graduated to 0.001 in. and located 90° apart along the axis of the exposed portion of the pile. Readings shall be taken at intervals specified in Sections 4, 5, or 6, Test Procedures. Readings shall be taken from gauges mounted on a reference beam supported at each end by reliable supports located at least 10 ft from the center of the test pile.

In addition to these readings, elevations to the nearest one-thousandth of a foot by use of an Engineers' level and rod shall be recorded. The entire measuring installation shall be protected from direct sunlight, frost action and other disturbances that might affect its reliability.

The head of each test pile shall be cut-off level or shall be capped in such a manner as to produce a plane, horizontal bearing surface.

All records obtained during the test shall be the property of the Department. Furnishing and driving the piles, complete in place, will be paid for under the item for the type of piles on which the test is made.

Before starting the work, the Contractor shall submit to the Engineer, for approval, a written description of the equipment and method which the Contractor intends to use. The method must be of an approved type and shall be altered as necessary to meet the approval of the Engineer.

2. Load Application.

The method of applying the load to the pile will be at the option of the Contractor, provided the method is adaptable to accurate measuring of the applied load, and the method avoids eccentric loading on the pile. The first increment of load shall include allowance for weight of the equipment. Hydraulic Jacks shall be of an approved type and capable of supplying a minimum jacking capacity equal to the maximum test load plus 20%. The Contractor shall provide a load cell, subject to the approval of the Engineer, which is capable of determining load transfer to the test pile. The load cell shall have a capacity equal to the jack capacity and shall be calibrated by a certified testing laboratory. In addition, the Contractor shall provide a calibration certificate from a certified testing laboratory relating pressure gauge reading to jack load. The Contractor shall submit to the Engineer both calibration certificates prior to load testing.

3. Reaction Loads.

The total reaction load shall be not less than 250% of the design load for both the short duration and maintained load tests and 400% of the design load for the quick load test method.

Any one of the following devices for applying the vertical loads may be used:

a. Load Supported Directly by Pile*.* A loading platform or box shall be supported on top of the pile to be tested. The construction of the box and the application of the loads shall be such that no lateral forces will be applied to the top of the pile and no impact will occur as the loads are placed. In cases where the test pile is in an excavation below the natural ground surface, an extension column of structural steel or steel pile may be used to extend from the pile head up to the test box.
b. Load from Weighted Box or Platform Applied to Pile by Hydraulic Jack. A test box or test platform resting on cribbing shall be constructed over the pile and loaded with suitable material. A hydraulic jack with a recently calibrated pressure gauge shall be interposed between the pile head and the load box and load applied to the pile by operating the jack.
c. Load Applied to Pile by Hydraulic Jack Acting Against Anchored Reaction Members. Two or more piles to be used as anchor piles shall be driven at a minimum distance of 5 ft from the test pile. A girder of sufficient strength to act as a reaction beam shall be fastened to the upper ends of the anchor piles. A hydraulic jack with a recently calibrated pressure gauge shall be interposed between the head of the test pile and the underside of the reaction beam and the test load applied to the pile by operating the jack.
d. *Test Procedures.* The Contractor shall use the load sequence specified under "Short Duration Load Test."

The application of the test load shall not begin sooner than 72 hours after placing concrete in Cast-in-place and Steel pipe piles and no sooner than 48 hours after other type piles are driven.

A single pile shall be load-tested to not less than twice the design load. When 2 or more piles are to be tested as a group, the total load shall be not less than 1.5 times the design load for the group.

4. Short Duration Test.

The load sequence shall be as follows:

a. Apply 25% of the design load every one-half hour up to the greater of the following: 200% of design load; to an applied load which transfers 100% of design load to the bearing strata as determined from tell-tale measurements but not greater than 90% of the reaction load. Longer time increments may be used, but each time increment should be the same.
b. At the maximum applied load, maintain the load for a minimum of one hour and until the settlement (measured at the lowest point on the pile at which measurements are made) over a one-hour period is not greater than 0.01 in.
c. Remove 25% of the applied load every 15 minutes until zero load is reached. Longer time increments may be used, but each should be the same.
d. Measure rebound at zero load for a minimum of one hour. In no case shall a load be changed if the rate of settlement is not decreasing with time. For each load increment or decrement, take readings at the top of the pile and on the internal instrumentation at 1-, 2-, 4-, 8-, and 15-minute and at 15-minute intervals thereafter.

Provided that the design load does not exceed one hundred percent (100%) of the load transferred to the bearing stratum at the maximum test load, the design load from this test type shall be the greater of the following:

1. Design Load Based on Settlement During Loading:
    1. For Piles 24 in. or less in diameter, 50% of the applied test load which cause a gross settlement at the pile cutoff grade equal to the sum of: a) the theoretical elastic compression of the pile in inches, assuming all the load on the butt is transmitted to the tip, plus b) 0.15 in., plus c) one hundred twentieth of the pile tip diameter or pile width in inches, i.e.,

$$S_f = S + \left(0.15 + {}^{D}/_{120}\right)$$

Where: $S_f = Settlement\ at\ failure, in\ inches$
$D = Pile\ diameter\ of\ width, in\ inches$
$S = Elastic\ deformation\ of\ pile\ length, in\ inches$

    2. For Piles greater than 24 in. in diameter or width:

$$S_f = S + {}^{D}/_{30}$$

If the settlement is so small that the load-settlement curve does not intersect the failure criterion, the maximum test load shall be taken as the failure load.

2. Design Load Based on Net Settlement After Rebound:

50% of the applied test load which results in a net settlement of the top of the pile of ½ in., after rebound for a minimum of one hour at zero load.

5. Maintained Load Test.

The test loads shall be applied in at least five increments equal to 50, 100, 150, 175 and 200% of the design load. All intermediate load steps shall be maintained constant for a period of two hours. During the loading cycle, the contemplated design load and twice the design load, shall be maintained constant until settlement does not exceed 0.02 in. in 12 consecutive hours, or until the

pile has failed as determined by the Engineer. The loading period for twice the design load shall be no less than 24 hours.

The total test load shall be removed in decrements not exceeding 25% of the total test load. Each step of unloading shall be maintained constant for a period of 4 hours.

During loading, record readings of time, load, and movement at intervals not exceeding 10 minutes during the first one-half hour, 30-minute intervals up to 2 hours at 1-hour intervals up to 12 hours and 2-hour intervals thereafter.

During unloading, take readings at intervals not exceeding 20 minutes for the first hour and I hour intervals thereafter. Take a final rebound reading 4 hours after all load has been removed.

The design load shall be determined in accordance with the procedures specified in the Short Duration Load Test.

6. Quick Load Test.

This load test shall be performed on individual piles only.

The load shall be applied in increments of 5 to 10 tons and shall not exceed 10% of the design load. The time interval between readings shall be 2.5 minutes or as otherwise specified. Add load increments until continuous jacking is required to maintain the test load or until the capacity of either the loading apparatus or reaction load is reached. Hold the failure load or maximum applied load for not less than 5 minutes. Unload the pile in no less than four equal increments.

Record time, load, and movements immediately, before and after the application or removal of each load increment. Take a final rebound reading 15 minutes after removing all loads. The design load shall be determined in accordance with the procedures specified in the Short Duration Load Test.

7. Static-Cyclic (Express) Load Test.

This load test can apply to a compression test, tension test, or both, on a pile and provide the ultimate capacity of the pile. The load test is carried out in four "loading-unloading" cycles, at a constant loading rate, conducted continuously without allowing for settlement stabilization.

The loading frame should be designed to handle at least two times the estimated ultimate pile capacity. The displacement and load readings from the top of the pile are to be taken continually by a data acquisition system.

The load sequence shall be as follows:

a) For a compression test; apply continuously a load at a rate between 20 to 40 kips/minute until failure is observed and an additional settlement equal to 0.1 in. is achieved with total pile settlement equal or exceeding 1 in. A failure is defined when displacement increases without an increase in the pile's load at or below the ratio of 0.1 kips/0.1 in./ft pile embedment for all compression tests. Unload the pile at a constant rate between 60 to 80 kips/minute until zero load. Carry out additional three load-unload cycles to the maximum load that was achieved in the first cycle.
b) For a tension test, apply a load at a rate of 15 to 30 kips/minute and unload at a rate of 30 to 60 kips/minute. Failure is defined when displacement increases without an increase in the pile's load at or below the ratio of 0.05 kips/0.1 in./ft pile embedment for all tension tests.

c) For all tests, pile top load and displacement are measured at intervals of loads equal to 10% of the estimated ultimate pile capacity but no more than 20 kips for a compression test and 10 kips for a tension test. The readings need to allow for accurate definition of the load-unload interception. The use of electronic data acquisition is recommended. If dial gages are used, the gages should not be adjusted at the end of the first cycle and the zero load reading at the end of the first cycle (first zero reading of the second cycle) will be subtracted from the readings of the second cycle.

The pile design load on this test is based on the measured ultimate capacity of the pile. The ultimate capacity of the pile is defined as the average of the three intersection points formed by the load-unload curves.

C. Dynamic Load Tests.

1. Dynamic Load Test Preparation.

Dynamic measurements will be taken by the Engineer during driving piles designated as Dynamic Load Test (DLT) piles.

Prior to placement in the leads, the Contractor shall make each designated concrete and/or timber pile available for taking of wave speed measurements and for predrilling the required instrument attachment holes. When wave speed measurements are made, the piling shall be in a horizontal position and not in contact with other piling. The Engineer shall furnish the equipment, materials, and labor necessary for drilling holes in the piles for mounting the instruments. The instruments will be attached near the head of the pile with bolts placed in masonry anchors for the concrete piles or through drilled holes on the steel piles.

The Contractor shall provide the Engineer reasonable means of access to the pile for attaching instruments after the pile is placed in the leads. If, in the opinion of the Engineer, the instruments cannot be installed before pile is placed in the leads, then a platform with minimum size of 4 ft x 4 ft (16 ft^2) designed to be raised to the top of the pile while the pile is located in the leads shall be provided by the Contractor. It is estimated that the Engineer will need approximately 1 hour per pile to install the dynamic load test equipment.

The Contractor shall furnish electric power for the dynamic load test equipment. The power supply at the outlet shall be 10 amp, 115VAC, 55 to 60 Hz, only. Field generators used as the power source shall be equipped with functioning meters for monitoring voltage and frequency levels.

The Contractor shall furnish a shelter to protect the dynamic load test equipment from the elements. The shelter shall have a minimum floor size of 8 ft x 8 ft (64 ft^2) and minimum roof height of 7 ft. The inside temperature of the shelter shall be maintained above 45°F. The shelter shall be located within 50 ft of the test location.

The pile shall be driven to the depth at which the dynamic analyzer indicates that the ultimate pile resistance shown in the contract plans has been achieved.

The stresses in the piles will be monitored during driving with the dynamic analyzer to ensure that the pile stresses determined do not exceed the values which would cause pile damage. The point of impending damage in steel piles is defined herein as a compressive driving stress of 90% of the yield point of the pile material. For concrete piles, tensile stresses shall not exceed 3 multiplied by

the square root of the concrete compressive strength, f_c, plus the effective prestress value, $(3\sqrt{f_c} + prestress)$ and compressive stresses shall not exceed 85% of the compressive strength minus the effective prestress value $(0.85 \times f_c - prestress)$. For timber piles, the compressive driving stress shall not exceed three times the allowable static design strength listed on the plans. If necessary, the Contractor shall reduce the driving energy output of the hammer in order to maintain stresses below these values. If non-axial driving is indicated by dynamic analyzer measurements, the Contractor shall immediately realign the driving system.

When directed by the Engineer, the Contractor shall wait 12 to 24 hours and then after the instruments are reattached, retap the dynamic load test pile. It is estimated that the Engineer will require approximately 0.5 hours to reattach the instruments. A cold hammer shall not be used for the redrive. The hammer shall be warmed up before redrive begins by applying at least 20 blows to another pile. The maximum amount of penetration required during redrive will be 6 in. or the maximum total number of hammer blows required will be 50, whichever occurs first. After retapping, the Engineer will either provide the cut-off elevation or specify additional pile penetration and testing.

2. Dynamic Load Test by Contractor.

When directed in the Contract documents, dynamic measurements will be taken by the Contractor during pile driving and shall be subject to the Department's field review. Those piles to be tested will be designated as dynamic load test piles or “DLT” on the plans and shall be located by the Department. Preliminary location of piles to be tested are subject to revision by the Engineer. The piles to be static load tested and approximately 10% of the remaining driven piles will be tested by this method.

The dynamic tests are to be made by the Contractor's engineer who shall be registered with the Commonwealth of Massachusetts as a Professional Engineer. The same Contractor's Engineer conducting the wave equation analysis shall perform the dynamic load tests. Each dynamic test shall also include a “CAP-WAP” analysis in order to closely model actual field conditions. The damping, quake and soil resistance distribution values will be provided by the Contractor's Engineer. The Contractor's Engineer shall be experienced in the use of the Pile Driving Analyzer (PDA) and its purpose as related to pile capability determination. The Contractor's Engineer will also be proficient in the interpretation of the PDA and “CAP-WAP” data and shall determine the tested pile's capacity based upon this data.

The Contractor shall submit to the Department a written report with a summary of results upon completion of each PDA test including “CAP-WAP” analysis. A copy of the entire PDA and “CAP-WAP” analysis output will be submitted to the Department for review along with the Contractor's report of each PDA and “CAP-WAP” test. The PDA and “CAP-WAP” output will *not* substitute for a written report which includes a summary of the results but will be submitted *with* such a report.

The Contractor shall submit evidence of the engineer's proficiency to the Department at least 2 weeks in advance of the work to allow the Department adequate time for review and approval or comments. No pile driving will be allowed until written approval has been received from the Engineer.

A. PDA Equipment.

The equipment to perform the dynamic tests shall be a Mode GC pile driving analyzer by Goble, Rausche, Likins and Associates, Inc., 4423 Emery Industrial Parkway, Cleveland, Ohio 44128, phone (216) 831-6131, or approved equal. The equipment shall be complete with all pertinent peripheral equipment necessary to complete and record the test data and complete the analysis of pile capacity.

B. Pile Testing Program.

At least 2 weeks prior to initiating the pile driving operation, the Contractor shall submit a "pile testing program" outline to the Department for review and approval. The following procedure is suggested as an example of a pile testing program which incorporates the wave equation analysis and the dynamic pile driving analysis including the "CAP-WAP" portion of the dynamic testing.

The testing should be performed by experienced engineers. The scope and sequence of testing services is suggested as follows:

1. Perform initial wave equation analysis based on subsurface conditions, pile type, pile capacity, and pile driving equipment to be utilized. See the previously referenced FHWA Manual for examples of the WEAP analysis procedure from static analysis to parameter selection. Submit written report of each wave equation analysis with complete print-out to the Department for review.
2. Drive piles to be static load tested first at locations specified on the plans using the driving criteria established by the wave equation. That driving criteria, however, is subject to change due to actual hammer performance and expected soil strength changes. Dynamic testing with the "PDA" shall be made during the driving of all piles to be static load tested.
3. After performing dynamic load testing on the piles to be static load tested, evaluate static load test piles after a minimum waiting period, to be determined by the Engineer, by restriking the piles with simultaneous dynamic testing by the Pile Driving Analyzer. Restrike testing is considered essential for service load capacity determinations if they are to include setup/relaxation effects since the analyzer gives the pile capacity at the time of testing.
4. The remaining 10% of the piles at each abutment which have been designated for PDA testing should be tested during additional construction control visits. They should be tested on initial installation and restrike, as soil conditions dictate at the discretion of the Engineer. Other than these tests, the Engineer will determine if further dynamic tests should be made when the hammer system is replaced or modified, etc.
5. Perform supplementary, rigorous laboratory wave analysis of the measured data using "CAP-WAP" on all of the piles tested to verify and refine field results, and upon restrike testing.
6. Submit to the Department a written report including a written summary of results in addition to a copy of the actual print-outs. This report will show all pertinent information, upon completion of the PDA testing and "CAP-WAP" analysis of each pile.
7. Based on field results, the following will be reviewed, analyzed and the results of this analysis will be printed in a report by the Contractor's Engineer:
    a. Driving stresses (compression or tension)
    b. Hammer system efficiency

   c. Pile structural damage/integrity
   d. Bearing capacity
8. It should be recognized that each site has unique and often unforeseen characteristics. Judgements are to be made, even during the testing program by the Contractor's experienced engineer performing the test as to deletions or additions to a "standard" program which will result in the most benefit to the foundation design.

940.63: Test Piles (Indicator Piles)

Test piles shall be driven when shown on the plans at the locations and to the lengths specified by the Engineer. All test piles shall be driven with impact hammers. In general, the specified length of test piles will be greater than the estimated length of production piles in order to provide for variation in soil conditions. The driving equipment used for driving test piles shall be identical to that which the Contractor proposes to use on the production piling. Approval of driving equipment shall conform with the requirements of these specifications. The Contractor shall excavate the ground at each test pile to the elevation of the bottom of the footing before the pile is driven.

In the absence of a wave equation analysis, test piles shall be driven to a penetration of 0.5 in. or less after 10 consecutive hammer blows unless the Engineer provides a hammer blow count established by wave equation analysis within a range of tip elevations or unless the driving criteria is established by the dynamic formula.

Test piles which do not attain the bearing value specified above at a depth of 1 ft above the estimated tip elevation shown on the plans shall be allowed to "set up" for 12 to 24 hours as directed by the Engineer before being redriven. A cold hammer shall not be used for redrive. The hammer shall be warmed up before driving by applying at least 20 blows to another pile. If the bearing value is not attained on redriving, the Engineer may direct the Contractor to drive a portion or all of the remaining test pile length and repeat the "set up" redrive procedure. Test piles driven to plan grade and not having the bearing required, shall be spliced and driven until the required bearing is obtained.

A record of driving of test piles will be prepared by the Contractor which includes the number of hammer blows per foot for the entire driven length, the as driven length of test pile, cutoff elevation, penetration in ground, and any other pertinent information requested by the Engineer. The Contractor shall provide the information listed in the "Pile Driving and Equipment Form" to the Engineer for inclusion in the record. If redrive is necessary, the Engineer shall record the number of hammer blows per in. of pile movement for the first foot of redrive. The Contractor shall not order piling to be used in the permanent structure until test pile data has been reviewed and pile lengths are authorized by the Engineer.

940.64: Determinations of Required Pile Driving Resistance and Depth of Penetration

Practical Refusal.

Practical refusal will be considered attained when ten blows of an adequate hammer, operating at the number of blows per minute for which the hammer is rated by the manufacturer, are required to produce a total penetration of ½ in. Driving should then cease, provided that the pile has not hit an obstruction and has been driven to the depth at which the borings indicate refusal material or bedrock.

When piles are not either required or directed to be driven to bedrock or refusal, the Engineer shall determine the required driving resistance for safe bearing values and shall establish minimum tip elevations or acceptable bearing stratum depending on subsurface condition. The required driving resistance will be established as described in 940.61: Driven Pile Capacity.

When determining the final driving resistance of the pile, the hammer shall be operated at a speed not less than 90% of the maximum blows per minute specified by the manufacturer. The final driving resistance shall be appropriately adjusted to the actual hammer energy delivered as specified by the manufacturer for the operating speed.

When directed by the Engineer, the Contractor shall make dynamic field measurements to demonstrate the percentage of the hammers rated energy is transferred to the pile head.

940.65: Procedure for Driving

A. General.

No piles shall be driven except in the presence of the Engineer. Where practicable, piles shall be driven continuously to the required penetration and bearing capacity. When the continuous installation of a pile has been stopped for any reason, the pile advancement shall be started in a manner which will not damage the pile. Any pile which cannot be advanced or which is damaged in the process, shall be rejected and either cut-off and repaired or replaced at the discretion of the Engineer. Rejected piles shall be replaced or repaired at no cost to the Department. Any pile restarted shall be advanced no less than 3 in. before determining the final driving resistance.

The order of placing individual piles in pile groups shall be either starting from the center of the group and proceeding outwards in both directions or starting at the outside row and proceeding progressively across the group.

If any driven pile is raised more than ½ in. by the subsequent driving of adjacent piles, it shall be redriven to the required final resistance to penetration with no compensation for the additional driving.

Cast-in-place and steel pipe piles shall not be filled with concrete until all piles within a footing have been checked for uplift and redriven where necessary.

All piles shall be driven a minimum of 10 ft into original ground.

B. Accuracy of Driving.

The tops of piles at cut-off elevation shall be within 6 in. of plan locations. No pile shall be nearer than 4 inches from any edge of the cap. Any increase in size of cap to meet this edge distance requirement shall be at the Contractor's expense.

Piles shall be installed so that the axial alignment of the top 10 ft of the pile is within 4% of the specified alignment. For piles that cannot be inspected internally after installation, an alignment check shall be made before installing the last 5 ft of pile or after installation is completed provided the exposed portion of the pile is not less than 5 ft in length. The Engineer may require that driving be stopped in order to check the pile alignment. If the location and/or alignment tolerances specified are exceeded, the extent of overloading shall be investigated and if, in the judgement of the Engineer, corrective measures are necessary, suitable measures shall be designed and

constructed by the Contractor at no cost to the Department. Pulling laterally on piles to correct misalignment shall not be permitted.

C. Obstruction.

If conditions during driving indicate that the pile is hitting an obstruction and the obstruction is not in embankment that has been placed under the contract the following shall apply:

1. If the elevation of the top of the obstruction is less than 5 ft below the elevation of the bottom of the footing, the Contractor shall drive through the obstruction or shall use whatever means are necessary to remove or circumvent the obstruction without any additional compensation.
2. If the elevation at the top of the obstruction is 5 ft or more below the elevation of the bottom of the footing, the Contractor shall use a combination of water jet and hammer to drive through the obstruction without any additional compensation.
3. If the use of the combination water jet and hammer (2) above does not allow pile to be driven through the obstruction, upon approval by the Engineer, the Contractor shall exercise one of the following options:
    a. Drive all surrounding and adjacent piles to the hang-up pile or piles to determine the approximate size of the obstruction;
    b. Employ the services of a test boring or other such exploratory method.
4. After the approximate size of the obstruction is obtained, the Engineer will determine whether the obstruction is to be removed or if the footing will be redesigned leaving the obstruction in place.
5. If it is determined that the obstruction (3) above is to be removed, the Contractor shall be paid for the work of removing the obstruction under Subsection 9.03: Payment for Extra Work.
6. No allowance on any kind other than (5) above and as provided in Subsection 8.09: Delay and Suspension of Work will be allowed for the above.

940.66: Splices

A. General.

Full length piles shall always be used where practical.

B. Timber Piles.

Splicing of timber piles will not be permitted.

C. Steel Pipe Piles and Steel H Piles.

Where these piles have to be extended, the spliced connection shall be a continuous full penetration butt-weld. The butt-welding shall be made to develop the full strength of the pile, both in bearing and in bending. Welding shall conform to the applicable provisions of 940.61: Driven Pile Capacity.

Butt-weld splicing of piles other than as shown on the plans will not be permitted without express written consent of the Engineer.

Welded splice connections for pipe piles shall be made with a welding or backup ring. Preheat requirements for the welding of pipe piles shall be as specified for ASTM A36 steel.

D. Precast-Prestressed Concrete Piles.

Splices shall develop 100% of the pile strength both in direct stress and in bending. Splices for concrete piles shall be made by the cement-dowel method. Details of the cement-dowel splice shall be shown in the plans. Mechanical splices for concrete or steel piles may be approved by the Engineer if the splice can transfer the full pile strength in compression, tension and bending. Piles shall have only 1 splice per pile. Splices in the lower 40 ft of the pile will not be permitted.

940.67: Defective Piles

The procedure incident to the driving of piles shall not subject them to excessive and undue abuse, producing: injurious splitting, splintering and brooming of the wood; deformation of steel; breakage and cracking in precast-prestressed concrete piles.

Manipulation of piles to force them into proper position will not be permitted when considered to be excessive by the Engineer. Piles damaged by reason of internal defects, by improper handling, driving, defective welds or piles driven out of proper location, shall be corrected at the Contractor's expense by one of the following methods approved by the Engineer for the piles in question.

1. The pile shall be withdrawn and replaced by a new and if necessary, a longer pile.
2. A second pile shall be driven adjacent to the defective or low pile.

Damaged steel piles may be spliced at some point such that the completed pile shall be satisfactory.

After the shells for cast-in-place piles and pipe for pipe piles have been driven, they shall be inspected and will be classified defective if any of the following are discovered:

1. The casing shows signs of buckling.
2. The diameter varies more than 15% from the original value.
3. The point of the casing deviates more than 10% of the length of the pile below plan cut-off elevation from the design alignment.
4. The casing deviates more than 6% of its length from a straight line connecting the mid-points of the ends of the casing. This requirement shall be taken as satisfied if some segment of the bottom of the casing is visible. If the bottom of the casing is out of sight, the shape and alignment of the casing shall be surveyed with a suitable instrument supplied by the Contractor and approved by the Engineer.
5. The inside of the casing shows any signs of water or soil.

The Contractor shall provide sufficient lights and other equipment necessary to inspect each shell throughout its length.

Precast-prestressed concrete piles which break within 10 ft of ground shall be, at the discretion of the Engineer, either replaced or cut-off and spliced at no cost to the Department. Piles which break below 10 ft from ground surface shall be rejected and replaced by the Contractor at no cost to the Department. The Engineer may elect to use dynamic measurements to aid in evaluating pile integrity.

940.68: Cutoffs

A. Timber Piles.

The tops of piles shall be sawed off to a true plane at the grades shown on the plans. All cuts and abrasions on treated piles shall be repaired in accordance with AWPA Standard M4.

Nail holes shall be filled by driving galvanized nails flush with the surface of the pile.

B. Steel or Cast-In-Place Piles.

After driving has been completed the steel or cast-in-place-piles shall be cut off at the directed grade. Cutting of piles shall not be done until it is certain that further operations will have no effect on the previously driven piles.

Temporary capping devices shall be provided for cast-in-place and steel pipe piles immediately upon cutoff to prevent soil and water from entering driven piles prior to placing concrete.

C. Precast-Prestressed Concrete Piles.

Precast-prestressed concrete piles shall be cut-off at the grades specified in the contract documents. Piles shall not be cut-off until it is certain that further pile driving operations will have no effect on the driven piles.

940.69: Placing and Protecting Concrete Filled Piles

No concrete shall be placed in a shell or pipe until all piles within a footing have been satisfactorily driven, inspected and approved by the Engineer. No concrete shall be placed except in the presence of the Engineer.

Prior to placing concrete in each pile, 1 ft^3 of mortar, having a slump of not more than 3 in., shall be deposited in the bottom of the pile.

Concrete shall then be deposited in the casing through a funnel having a neck not more than 1.5 ft long and not more than 7 in. in diameter. The funnel shall be provided with supports at the neck to permit air to escape during the concrete placing operation.

Placing of concrete in each pile shall be continuous and in a manner which will assure complete filling of the casing. The slump of the concrete shall be from 3 to 5 in.

Special care shall be exercised in filling the casing to prevent honeycomb and air pockets from forming. Internal vibrators and other means shall be used to the maximum depth practicable, as determined by the Engineer, to consolidate the concrete.

During cold weather the pile heads and surrounding ground shall be covered by straw or other suitable protection to prevent frost from damaging the concrete itself or heaving the ground.

During the hot weather pile heads shall be protected by suitable covering material.

COMPENSATION

940.80: Method of Measurement

The length of piles to be paid for shall be the total length in place, measured from the tip of the pile to the plane of the plan cut-off elevation.

Timber pile cut-offs will be measured by the foot and the length to be paid for will be the difference between the length of piles approved by the Engineer on the schedule submitted by the Contractor and the length of piles in place, but will not include any lengths cut-off for correction of damaged ends or for piles rejected by the Engineer.

Precast-prestressed piles will be measured by the foot from the tip of the pile including any steel extension installed for protection (to the plan cut-off elevation) and any extensions required to reach the cutoff elevation.

940.81: Basis of Payment

Timber piles will be paid for at the contract unit price per foot under the item for Untreated Treated Timber Piles, left in place, or under the item for Treated Timber Pile, left in place.

If timber piles furnished according to the approved schedule of length prove inadequate to sustain the required load, the Engineer may in writing make changes in the schedule previously approved by them and the piles ordered and driven according to the revised schedule will be paid for at the contract unit price per foot.

If as a result of the revised schedule or as a result of timber pile cutoff being used as piles, any of the timber piles which have been purchased by the Contractor in accordance with the approved schedule, cannot be used elsewhere on the project, such piles not used will be paid for under the provisions of Subsection 9.03: Payment for Extra Work, except that no profit or overhead will be allowed and subject to an allowance for their fair salvage value of the piles. In no case will payment for these piles exceed 50% of the bid price per foot of either treated timber piles or untreated timber piles.

Payment for cut-off allowance on treated and untreated timber piles will be made at 50% of the respective bid price per foot. The cut-off shall become the Contractor's property.

Timber test piles, whether used in the structure or driven outside the structure, will be paid for at the contract unit price for each pile driven under the item for Timber Test Pile. When the test pile is not used in the structure, the price shall also include full compensation for the removal of the test pile or cutting off 2 ft below finished grade of ground and backfilling the hole with suitable material.

Steel piles will be paid for at the contract unit price per foot under the item for Steel Piles, complete in place.

Cast-in-place concrete and steel pipe piles will be paid for at the contract unit price per foot under the items Cast-in-Place Concrete Piles and Steel Pipe Piles, complete in place, including the concrete and steel reinforced cement.

Piles driven as Test Piles or for Load Tests, if incorporated in structures, will be paid at the contract unit price for the length in place under the item for the type of pile.

No payment will be made for the cut-off of precast-prestressed or steel piles.

Pile shoes will be paid per each on piles accepted for payment by the Engineer.

All costs for splicing piles shall be included in the contract unit price per foot for the respective pile item, which price shall also include full compensation for delays incurred by splicing of piles or by any other operations in connection with the work on piles.

Pile loading tests will be paid for at the contract unit price for each pile tested under the item for a specific load sequence.

The contract price shall also include full compensation for any interruptions to pile driving or other operations in the vicinity of the pile loading tests. The test at each pile shall be considered completed when all materials and equipment used in the test have been removed.

If a pile load test is applied to a steel pipe pile, cast-in-place concrete pile, or precast-prestressed concrete pile, then the contract price for a load test shall also include full compensation for cutting the pile to the grade necessary to properly incorporate the pile in the structure or, if it is not to be incorporated in the structure, for cutting the pile to the grade necessary to avoid its interference with the proposed construction.

The cost of performing Wave Equation Analysis shall be included in the contract unit price per foot of pile.

Payment for initial and restrike dynamic pile measurements will be at the contract unit price per pile tested. The price shall include costs for all sensory and wiring devices, monitoring equipment; the setting up and checking of equipment, monitoring personnel; costs associated with Contractor's down time during regular working hours while setting-up equipment and making dynamic measurements.

940.82: Payment Items

940.	Untreated Timber Piles	Foot
941.	Treated Timber Piles	Foot
942.*	Steel Pile, HP __x__	Foot
943.*	Steel Pipe Pile __-inch OD	Foot
945.	Cast-in-Place Concrete Piles	Foot
946.12	Precast-Prestressed Concrete Pile - 12 Inch	Foot
946.14	Precast-Prestressed Concrete Pile - 14 Inch	Foot
946.16	Precast-Prestressed Concrete Pile - 16 Inch	Foot
946.18	Precast-Prestressed Concrete Pile - 18 Inch	Foot
946.20	Precast-Prestressed Concrete Pile - 20 Inch	Foot
947.1	Timber Test Pile	Each
948.1	Short Duration Load Test	Each
948.2	Maintained Load Test	Each
948.3	Quick Load Test	Each
948.31	Static-Cyclic (Express) Load Test	Each
948.4	Dynamic Load Test Preparation	Each
948.41	Dynamic Load Test by Contractor	Each
948.5	Pile Shoes	Each
999.940[1]	Untreated Timber Pile Cut-off	Foot
999.941[1]	Treated Timber Pile Cut-off	Foot

*Designation by size and weight.
[1]Not a bid item.

SUBSECTION 945: DRILLED SHAFTS

DESCRIPTION

945.20: General

This work shall consist of excavating and constructing drilled, cast-in-place reinforced concrete shafts installed in accordance with these specifications and the details and dimensions shown on the plans.

Drilled shafts shall consist of reinforced concrete sections that are cast-in-place against in situ soil or rock or a casing. Permanent casings are designed as part of the drilled shaft and shall remain in place after concrete placement is completed. Temporary casings shall be installed to facilitate drilled shaft construction and removed during or after concrete placement. The embedment length of the drilled shafts may be modified by the Engineer, pending results of any subsurface investigation taken and/or load testing performed as an initial part of the work, as approved by the Engineer.

MATERIALS

945.40: General

Materials shall meet the requirements specified in the following Subsections of Division III, Materials:

Cement Concrete M4.02.00
Reinforcing Steel M8.01.0
Epoxy Coated Reinforcing Bars M8.01.7
Galvanized Reinforcing Bars M8.01.8
Mechanical Reinforcing Bar Splicer M8.01.9
Steel Casings M8.05.6
Cross Hole Sonic Testing Access Pipes M8.22.0
Drilling Slurry M9.40.0

CONSTRUCTION METHODS

945.50: Personnel Qualifications

Drilled shaft construction personnel must be experienced in this type of work. Experience shall be relevant to anticipated subsurface materials, water conditions, shaft size, and special construction techniques required. Prior to the Preconstruction Conference, the Contractor shall submit the following information to verify the firm's experience and the qualifications of personnel scheduled to perform the drilled shaft construction:

1. Submit a list of at least 3 projects successfully completed in the last 5 years, which used drilled shaft construction. Include a brief description and reference for each project listed.
2. Provide the names and detail the experience of the on-site supervisors and drill operators for the Project. On-site supervisors shall have at least 2 years of experience in drilled shaft construction, and drill operators shall have at least 1 year of experience.
3. A signed statement that the Contractor has inspected both the project site and all the subsurface information including any soil or rock samples made available in the contract documents.

Work on any drilled shafts shall not begin until the qualifications have been approved. The Engineer may suspend the drilled shaft construction if the Contractor substitutes unapproved personnel during construction. Requests for substitution of field personnel shall be submitted to the Engineer for approval. Additional costs resulting from the suspension of work will be the Contractor's responsibility, and no extension in contract completion date resulting from the suspension of work will be allowed.

The Contractor shall have on site during all drilled shaft construction activity a minimum of one person who has fulfilled the qualifications required for drilled shaft field inspector certification. The representative will be responsible for the Contractor's QC of the drilled shafts during all phases of construction. The Contractor's QC representative shall have proof of certification as a Drilled Shafts Inspector by the NETTCP or an equivalent certification program approved by the Department.

945.51: Drilled Shaft Installation Plan

The Contractor shall submit a drilled shaft installation plan for review and approval of the Engineer at least 30 days prior to the anticipated date of beginning drilled shaft work. This plan shall provide the following:

1. The sequence of drilled shaft construction represented on a layout plan as it relates to the overall construction plan and the sequence of shaft construction in bents or groups.
2. A review of equipment suitability based on the Contractor's understanding of the site subsurface conditions. Include a project history of the drilling equipment that demonstrates the successful use of the equipment for drilled shafts of equal or greater size in similar subsurface conditions. List proposed equipment with manufacturer's specification and catalog data including cranes, drills, augers, bailing buckets, casing oscillators, casing twisters, vibratory hammers, final cleaning equipment, desanding equipment, slurry pumps, core sampling equipment, tremies or concrete pumps, casing, etc.
3. Details of shaft excavation methods in soils and rock, including sloping bedrock and methods of removing any obstructions such as boulders or foundations, including a disposal plan for excavated material. Include details of methods used to perform final cleaning of the excavation and checking the cleanliness and soundness of the rock socket sidewalls and bearing surface.
4. Include details of the methods and materials used to fill or eliminate all voids between the plan shaft diameter and excavated shaft diameter, or between the casing and surrounding soil, if permanent casing is specified. Include a disposal plan for any water or contaminated concrete expelled from the top of the shaft (if applicable).
5. Details of the proposed method(s) for ensuring drilled shaft stability during excavation and concrete placement.
6. Method of monitoring plumbness and location of the shaft during construction.
7. Details for the use of drilling slurry including methods to mix, circulate, de-sand, maintain and dispose of the slurry (if applicable). Include a discussion of the suitability of the proposed drilling slurry in relation to the anticipated subsurface conditions.
8. A plan for QC of drilling slurries, if their use is proposed. In the QC plan, include property requirements, required tests and test methods to ensure the synthetic slurry performs as intended. Submit to the Engineer the name and current phone number of the synthetic slurry manufacturer's representative who will provide technical assistance during construction.
9. Reinforcing steel shop drawings and details of reinforcement placement, including bracing, centering and lifting methods and the method for supporting the reinforcement on the bottom of the shaft excavation. Include details for ensuring the reinforcing cage position is maintained during construction. Include details for attaching the crosshole sonic logging test access tubes to the reinforcing cage.
10. Evidence that the proposed materials and concrete mix design conform to all applicable Specifications.
11. Details of concrete placement, including proposed operational procedures for pumping and/or tremie methods and methods of curing and protecting the concrete. Include details for grout placement in the crosshole sonic logging test access tubes after testing is completed (if applicable).

12. Detailed procedures for permanent casing installation and temporary casing installation and removal, including casing dimensions.
13. Two copies of "Drilled Shaft Inspector's Manual" from the International Association of foundation Drilling (ADSC) and the Deep Foundation Institute (DFI) shall be supplied to the Engineer. These manuals shall become the property of the Department.

The Engineer shall approve or reject the drilled shaft installation plan after receipt of all submissions. The Contractor shall provide any additional information and submit a revised plan, if requested, for review and approval. All procedural approvals given by the Engineer will be subject to trial in the field and will not relieve the Contractor of the responsibility to satisfactorily complete the work. The Contractor shall submit requests for modification of adopted procedures to the Engineer.

All portions of proposed construction shall be described on shop drawings and submitted to the Engineer for approval. No work shall commence prior to receiving the written approval of the proposed methods and equipment by the Engineer. This approval shall be considered in no way as relieving the Contractor of the responsibility to satisfactorily complete the work in accordance with the Plans and Specifications.

A Preconstruction Meeting shall be conducted when so requested by the Engineer. Such meeting is held among the Department, the Contractor and the Drilled Shaft Subcontractor to review special requirements for the drilled shaft work, including installation plans, acceptance and rejection criteria, and project documentation.

945.52: Borings

When required in the contract documents, soil borings and/or rock cores shall be conducted at the specified locations and to the indicated size and depth, as approved by the Engineer. The boring logs shall be reviewed by the Contractor and shall be submitted to the Engineer for approval prior to mobilizing drilled shaft equipment. All work shall be performed in accordance with Subsection 190: Borings.

945.53: Trial Drilled Shaft

When required in the contract documents, a trial shaft shall be constructed by the Contractor. A trial shaft may be required on projects where unusual and variable subsurface conditions exist, when the dry method of construction is proposed, and/or when excavations are performed in open water areas.

The Contractor shall demonstrate the adequacy of their methods, techniques and equipment by successfully constructing a trial shaft in accordance with the plans and these requirements. This trial shaft shall be drilled to the maximum depth of any production shaft and away from production shafts as shown on the plans or as directed by the Engineer. Failure by the Contractor to demonstrate the adequacy of methods and equipment shall be reason for the Engineer to require modifications in equipment and/or method by the Contractor to eliminate unsatisfactory results. Any additional trial holes required to demonstrate the adequacy of altered methods or equipment shall be at the Contractor's expense. The same methods and equipment used to construct the approved trial shaft shall be used to construct the production shafts.

The trial shaft holes shall be filled with unreinforced concrete in the same manner that production shafts will be constructed and shall be cut off 2 ft below finished grade and left in place. The disturbed areas at these shafts shall be restored as nearly as practical to their original condition.

945.54: Protection of Existing Structures

The Contractor shall control their operations to prevent damage to existing structures and utilities. Preventive measures shall include, but are not limited to, selecting construction methods and procedures that will prevent caving of the shaft excavation, monitoring and controlling the vibrations from construction activities such as the driving of casing or sheeting, drilling of the shaft, or from blasting, if permitted. The Contractor shall be responsible for selecting and using equipment and procedures that keep deformations of adjacent structures within acceptable levels as determined by the Engineer.

945.55: General Methods and Equipment

The Contractor's methods and equipment shall have adequate capacity including power, torque and down thrust to excavate a hole of both the maximum diameter and to a depth of 25% beyond the depths shown on the plans. The permanent casing method shall be used only at locations shown on the plans or when authorized in writing by the Engineer. The Contractor shall provide all equipment and tools as necessary to construct the shaft excavation to the size and depth required. Drilling tools should contain vents to stabilize hydrostatic pressure above and below the tool during insertion and extraction.

A. Dry Method.

The dry method shall be used only at sites where conditions are suitable to permit construction of the shaft in a relatively dry excavation and where the sides and bottom of the shaft can be visually inspected by the Engineer during the excavation and prior to placing the concrete. The dry method shall only be approved when a trial shaft excavation demonstrates that: less than 6 in. of water accumulates above the base over a one-hour period without pumping; the sides and bottom of the hole remain stable without caving and sloughing over a 4-hour period following completion of excavation; any loose material or water can be removed prior to inspection and concrete placement.

B. Wet Method.

The wet method consists of using water or slurry (mineral or polymer) to maintain stability of the drilled hole while advancing the excavation to final depth, placing the reinforcing cage, and concreting the shaft.

Slurry should be introduced when the depth of the drilled hole is still above the piezometric level and not after the inflow of water is detected and/or sloughing has begun. This method may involve desanding and cleaning the slurry and final cleaning of the excavation by means of bailing bucket, air lift, submersible pump or other approved devices.

The wet method may also be used in combination with the casing method.

C. Casing Method.

The casing method may be used at sites where the dry or wet methods are inadequate to prevent hole caving or excessive deformation of the hole. The casing may be either placed in a predrilled hole or advanced through the ground by twisting, driving, or vibration before being cleaned out. When the casing is placed in a predrilled borehole, the temporary stability of the hole may need to be assured by using drilling slurry. The rising column of fluid concrete must force the slurry that is trapped in the annular space behind the casing out as the casing is being pulled.

The casing method may not be permitted at specified depths that are designated for mobilization of side resistance.

945.56: Drilled Shaft Excavation

A. General.

The Contractor shall use excavation techniques that are technically adequate and cost effective to meet the geologic conditions encountered at the site. Excavation for drilled shafts shall be made so that the sidewalls of the hole are stable at all times.

Drilled shafts shall be excavated to the dimensions and elevations shown or as directed. Materials removed from the shaft excavations and slurry shall be disposed of according to the applicable federal, state and local regulations and shall not be discharged into any stream, waterway, or storm water drainage system.

If approved by the Engineer, a partially excavated shaft may be left open overnight, provided that the excavation:

- Is stabilized at the bottom, sides and surface to prevent soil caving or swelling or a reduction of soil strength; and
- Is covered at the surface to protect the public.

Excavation shall not commence immediately adjacent to a concreted drilled shaft for a minimum of 24 hours after completing the shaft concrete pour.

The Contractor shall extend the drilled shaft tip elevations when so indicated by the results of the load test and/or the Engineer determines that the material encountered during excavation is unsuitable or differs from that anticipated in the design of the drilled shaft.

Drilled shaft excavation is excavation accomplished with conventional tools such as earth augers, casing twisters, drilling buckets, and overreaming (belling) buckets attached to drilling equipment of the size, power, torque, and down thrust (crowd) approved for use by the Engineer.

Should the Engineer have reason to believe that the drilled shaft excavation techniques or workmanship have been deficient, so that the integrity of any excavation is in question, work on that drilled shaft shall be stopped. Drilled shaft excavation will not be allowed to resume until the deficient excavation techniques or workmanship have been changed to the satisfaction of the Engineer.

B. Clean Out.

Appropriate means, such as a cleanout bucket or air lift, shall be employed to clean the bottom of the drilled shaft excavations. No more than 1 in. of loose or disturbed material will be allowed at the bottom of the excavation for end-bearing drilled shafts. No more than 3 in. of loose or disturbed material will be allowed at the bottom of the excavation for skin friction drilled shafts. All drilled shafts shall be assumed to be end-bearing shafts. Shaft cleanliness will be determined by the Engineer.

The Engineer shall be notified of completion of each drilled shaft excavation to permit inspection before proceeding with construction.

The drilled shaft dimensions and alignment shall be verified with approved methods. Final shaft depths shall be measured with a suitable weighted tape or other approved method after final cleaning. The drilled shaft excavation may be extended if the Engineer determines that the subsurface materials encountered are not capable of providing the required bearing capacity or differ from those anticipated in the design of the drilled shafts.

If caving occurs during any construction procedure, the construction operation shall be stopped, the Engineer shall be notified, and the shaft excavation shall be stabilized by approved methods.

C. Rock Socket Excavation.

Rock socket excavation is excavation that requires rock-specific tools and/or procedures to accomplish hole advancement, such as rock augers and core barrels. All excavation performed below the depth where rock socket excavation is authorized shall be considered rock socket excavation regardless of the density, strength, hardness, or changes in type or character of materials encountered.

D. Obstruction Excavation.

Obstructions are defined as impenetrable objects that cannot be removed or excavated using conventional rock or soil augers, drilling buckets, casing twisters, and cause a significant decrease in the rate of excavation advancement as compared to before the obstruction was encountered or shafts in close proximity advanced using the same techniques and equipment. The Engineer will consider the equipment, techniques, and level of effort by the Contractor and shall be the sole judge of the significance of any reduced rate of shaft advancement and the classification of obstruction excavation. Special procedures/tools needed to remove obstructions may include: core barrels, chisels, boulder breakers, downhole hammers, hand excavation, temporary casing, and increasing the hole diameter. Blasting shall not be permitted. The Contractor shall specifically log the depth and rate of removal of the obstruction.

Those obstructions located within 5 ft of the top level of the ground surface during shaft drilling at shaft locations shall be removed at the expense of the Contractor. Such obstructions may include man-made materials such as old foundations, utilities, tunnels, and natural materials such as boulders and wood.

Drilling tools that are lost in the excavation shall not be considered obstructions and shall be promptly removed by the contractor without compensation. All costs due to lost tool removal shall

be borne by the Contractor including but not limited to, costs associated with the repair of hole degradation due to removal operations or an excessive time that the hole remains open.

The rate of occurrence of obstruction encounters during the excavation and construction of drilled shafts may vary considerably from what is inferred from the boring logs due to sampling limitations of the boring(s), sampling bias due to the diameter differences between the drilled shaft and the boring(s), and spatial variability of the soil deposit.

The Engineer shall be present to evaluate the occurrence of obstructions, to authorize, and to approve the designation of such. Sloping bedrock and/or higher than anticipated bedrock, as inferred from the borings, shall not be considered obstruction excavation.

E. Casings.

Casings shall be steel, clean, watertight, and of ample strength to withstand handling and installation induced stresses and the pressure from both concrete and surrounding earth materials. The outside diameter (O.D.) of casings shall not be less than the specified size of shaft. Casings may be either placed in a predrilled hole or advanced through the ground by twisting, driving or vibration before being cleaned out.

Permanent casings shall be used only at locations shown on the plans or upon approval by the Engineer. The casing shall be continuous between top and bottom elevations.

Temporary casings shall be provided to aid shaft alignment and position, to prevent sloughing of the shaft excavation, and to prevent excessive deformation around the hole.

As the temporary casing is withdrawn, the level of concrete (and drilling fluid/slurry, if used) shall be maintained with a sufficient head to prevent any water and/or other extraneous materials from entering the drilled shaft. In addition to the foregoing, the level of concrete in the temporary casing shall be maintained a minimum of 5 ft from the bottom of the casing. As the casing is withdrawn, care shall be exercised to maintain an adequate level of concrete within the casing so that fluid trapped behind the casing is displaced upward and discharged at the ground surface without contaminating or displacing the shaft concrete.

F. Drilling Slurry Installation.

If synthetic drilling slurry is selected, a manufacturer's representative shall be available to provide technical assistance at the site prior to use of the slurry. The manufacturer's representative shall remain available during construction to adjust the slurry mix for the specific site subsurface conditions.

All in-hole drilling slurry shall meet the required Specifications prior to concrete placement. The slurry shall be cleaned, re-circulated, de-sanded or replaced to maintain the required slurry properties. The level of slurry in the excavation shall be maintained at not less than 5 ft above the groundwater level for all slurries. The slurry level shall be maintained a sufficient distance above all unstable zones to prevent bottom heave, caving or sloughing.

Slurry shall feed continuously into the shaft excavation as drilling progresses so that a stable excavation is maintained. A self-priming pump shall be used to reclaim the slurry. A functioning standby pump shall be kept on-site and available during the drilling operation.

G. Drilling Slurry Inspection and Testing.

All drilling slurries shall be mixed and kept thoroughly hydrated in an appropriate storage facility. Sample sets shall be collected from the storage facility and tests shall be performed to ensure the slurry conforms to the specified material properties before introduction into the drilled shaft excavation. A sample set shall be composed of samples taken at mid-depth and within 24 in. of the bottom of the storage facility. All slurry shall be sampled and tested in the presence of the Engineer. Final cleaning of the excavation and placement of concrete will not be allowed until the test results indicate the slurry properties are as specified.

A minimum of two sets of slurry tests shall be performed per eight-hour work shift, the first test being done at the beginning of the shift. Field conditions may require more frequent testing to ensure acceptable slurry properties. Copies of all slurry test results shall be provided to the Engineer on request.

945.57: Construction Quality Control

A. Location and Survey.

Drilled Shafts shall be located and staked by the Contractor who shall maintain and be responsible of all location and elevation stakes.

The Contractor shall maintain a construction method log during shaft excavation and concreting of each drilled shaft. This record shall be available for the Engineer's inspection as directed. The log shall contain for each shaft the following information:

- Shaft number, date and time of installation.
- Description and approximate top and bottom elevation of each soil or rock material, and final tip elevation.
- Level and variation of the piezometric surface.
- Excavation procedures and method used to stabilize the sides of shaft and any seepage of groundwater.
- Quantity, type of obstruction material, and drilling rate.
- Diameter of the as-built shafts.
- Plumbness and deviation of shaft location.
- Type, diameter, and length of any casing left in place.
- Time, method, and duration of placement of concrete.
- A chart showing quantity of concrete placed versus depth or elevation of top of concrete in shaft during placement.
- Other pertinent data relative to the installation.

B. Construction Sounding.

The Contractor shall provide to the Engineer access and equipment for checking the dimensions and alignment of each permanent shaft excavation. After excavation is complete, the bottom of the shaft shall be measured and sounded with a steel rod (AW) and/or a weighted tape. A check of the bearing surface by sounding shall be made in the presence of the Engineer, who shall determine if the drilled shaft excavation is acceptable. The bearing surface shall be sounded again immediately before placing concrete.

No more than 1 in. of loose or disturbed material will be allowed at the bottom of the excavation for drilled shafts designated as end-bearing and no more than 3 in. of loose or disturbed material will be allowed at the bottom of the excavation for drilled shafts designated as deriving their capacity from skin friction. Shaft cleanliness will be determined by the Engineer, based on visual inspection for dry shafts and other methods deemed appropriate for wet shafts. In addition, for dry excavations the maximum depth of water shall not exceed 3 in. prior to concrete placement.

C. Construction Tolerances.

The following construction tolerances apply to drilled shafts:

1. The drilled shaft shall be within 3 in. of plan position in the horizontal plane at the plan elevation for the top of the shaft.
2. The vertical alignment of a shaft excavation shall not vary from the plan alignment by more than ¼ in. per ft of depth or 2% of plumb for the total length of shaft.
3. After all the concrete is placed, the top of the reinforcing steel cage shall be no more than 6 in. above and no more than 3 in. below plan position. The top elevation of the shaft shall be within 2 in. of the plan top of shaft elevation.
4. The bottom of the shaft excavation shall be perpendicular to the axis of the shaft within 1 in. per foot of shaft diameter.
5. When the shaft steel reinforcement is to extend into the structural column or cap, all plan, vertical, and elevation tolerances shall meet the structural column or cap requirements.

Drilled shaft excavations constructed in such a manner that the concrete shaft cannot be completed within the required tolerances are unacceptable. Correction methods shall be submitted by the Contractor for the Engineer's review and approval before continuing with any drilled shaft construction. Correction procedures are dependent on analysis of the effect of the degree of misalignment and improper positioning.

D. Scheduling and Restrictions.

Drilled shaft excavation and cement concrete placement shall be scheduled so that each drilled shaft is cast immediately after drilling operations are complete. After the first drilled shaft on a project has been accepted, no significant change in construction methods, equipment, or materials used shall be made in the construction of subsequent shafts. Construction of subsequent shafts shall not proceed until the first drilled shaft has been approved by the Engineer. Drilling may commence on a subsequent shaft at an approved location provided that the cement concrete placement operation on the previous drilled shaft is in progress and there are sufficient workers present to complete all required operations.

For a minimum period of 24 hours after completion of the cement concrete placement operation in a newly constructed shaft, including withdrawal of casing if applicable, none of the following operations shall be permitted within 15 ft of the newly constructed shaft:

- Excavation for adjacent shafts;
- Construction of footings;
- Application of equipment loads; or
- Introduction of vibrations with a peak particle velocity of greater than ¼ in. per second.

945.58: Steel Reinforcement Configuration and Placement

Steel reinforcement shall not be placed until the Engineer has approved the results of all borings and load tests for drilled shafts.

The clear spacing between bars of the steel reinforcement cage shall be at least 5 times the size of the maximum coarse aggregate size of concrete. Reinforcing steel bars shall be connected together using double wire ties at each intersection of the longitudinal bars and spirals. Hooks at the top of the steel reinforcement cage shall not be bent outward if there is any chance that temporary casing will be used. Similarly, interior hooks must be designed to permit adequate clearance for a concrete tremie pipe, i.e., 12 in. minimum.

The assembled steel reinforcement cage outside diameter must be at least 10 in. smaller than the drilled hole diameter. This clear space is necessary both to permit free flow of concrete up the annular space between the cage and the hole perimeter and to provide adequate concrete cover over the steel reinforcement cage.

The steel reinforcement in the shaft shall be tied and supported so that the steel reinforcement will remain within the allowable tolerances given above. Concrete spacers or other non-corrosive durable spacing devices shall be used at sufficient intervals not exceeding 10 ft up the shaft to insure concentric spacing for the entire steel reinforcement cage length. The spacers shall be of adequate dimension to insure a minimum 5 in. annular space between the outside of the steel reinforcement cage and the side of the excavated hole or casing. The spacing of the spirals and/or ties may be adjusted slightly to accommodate the rotation of the centering devices. Cylindrical concrete feet, or approved alternate bottom supports, shall be provided to ensure that the bottom of the cage is maintained 3 in. above the base.

The steel reinforcement cage, consisting of longitudinal bars, spirals and/or ties, cage stiffener bars, spacers, centralizers, and other necessary appurtenances, shall be completely assembled and placed as a unit immediately after the shaft excavation is inspected and accepted. The steel reinforcement cage shall be supported by positive methods to prevent its displacement during concrete placement.

945.59: Cement Concrete Placement

A. General.

Cement concrete placement shall be performed in accordance with the applicable portions of Subsection 901: Cement Concrete and in accordance with the requirements herein. Cement concrete quantities over the theoretical amount required to fill any excavations for the shafts dimensioned on the plans shall be furnished at the Contractor's expense.

The bottom of the shaft shall be sounded immediately before placing concrete. Cement concrete placement for a drilled shaft shall start within 2 hours after the excavation has been completed and approved and the steel reinforcement has been placed and approved. If cement concrete placement is not begun within 2 hours, then the steel reinforcement cage shall be removed and inspected. The Contractor shall remove any caked slurry or soil from the steel reinforcement cage before returning the cage to the shaft, re-clean the bottom, re-circulate, and test the slurry prior to resetting cage. Cement concrete shall be placed in a manner to prevent segregation. Cement concrete placement

shall be a continuous operation except for the time interval necessary to remove temporary casings, tremie pipe sections, and to change concrete trucks.

The cement concrete shall remain in a workable plastic state through the placement period. Prior to cement concrete placement the Contractor shall provide test results of both a trial mix and slump test conducted by an approved testing laboratory to demonstrate that the cement concrete meets the above requirements.

If the drilled shaft excavation cannot be pumped free of seepage water at the time of cement concrete placement, the cement concrete shall be placed under water with a tremie pipe or pump hose. Cement concrete placement shall proceed continuously from the bottom of the shaft to the top of shaft elevation shown.

Shaft cement concrete may be placed without mechanical vibration in those areas of the drilled shaft that are not formed or are below the ground line or the water surface.

If caving occurs during concrete placement, the shaft will be rejected, and a repair plan shall be submitted by the Contractor to the Engineer for approval.

Should a delay in cement concrete placement occur because of a delay in cement concrete delivery or other factors, the placement rate shall be reduced to maintain a flow of fresh concrete into the shaft excavation. A maximum of 60 minutes shall be allowed between cement concrete placements. No cement concrete older than 90 minutes from batch time shall be placed. Procedures for cement concrete placement shall ensure that the cement concrete within the shaft becomes a monolithic, homogeneous unit. The exposed top of concrete shall be cured a minimum of 7 days by covering with wet burlap overlain with plastic sheets. The burlap shall be kept continuously wet during the entire 7-day cement concrete cure period.

B. Tremie Cement Concrete.

Tremies may be used for cement concrete placement in either wet or dry holes. Tremies used to place cement concrete shall consist of a tube of sufficient length, weight, and diameter to discharge cement concrete at the shaft base elevation. The tremie shall not contain aluminum parts that will have contact with the concrete. The tremie inside diameter shall be at least 6 times the maximum size of aggregate used in the cement concrete mix but shall not be less than 8 in. for tremie pipe or 4 in. for pump hose. The inside and outside surfaces of the tremie shall be clean and smooth to permit both flow of cement concrete and unimpeded withdrawal during concreting. The wall thickness of the tremie shall be adequate to prevent crimping or shear bends that restrict cement concrete placement. An alternate delivery system that can be used in case of failure of the primary delivery system shall be provided.

Tremie cement concrete shall be placed so that mixing with groundwater or slurry is avoided. The tremie tube shall be fitted with a valve or plug to prevent the cement concrete placed initially from contacting water before a sufficient head of concrete has been obtained. The bottom of the tremie tube shall be kept a minimum of 5 ft below the top of the in-place concrete at all times once the cement concrete has reached a depth of 5 ft. The initial placement of the tremie pipe shall be within 12 in. from the bottom of the shaft.

The tremie used for wet excavation concrete placement shall be watertight. Underwater placement shall not begin until the tremie is placed to the shaft base elevation. Plugs shall either be removed

from the excavation or be of material approved by the Engineer that will not cause a defect in the shaft if not removed. The discharge end of the tremie shall be constructed to permit the free radial flow of concrete during placement operations.

If concrete is placed under water, all displaced water shall be disposed of in an approved manner. When groundwater, the drilling water or slurry in the shaft excavation is to be removed by pumping during concrete placement, a standby pump shall be kept available on-site.

C. Pumped Cement Concrete.

Concrete pumps and lines may be used for concrete placement in either wet or dry excavations. All pump lines shall have a minimum 4 in. diameter and be constructed with watertight joints. Cement concrete placement shall not begin until the pump line discharge orifice is at the shaft base elevation.

Cement concrete shall be placed in a continuous operation so that the cement concrete always flows upward within the shaft. The delivery hose or pipe shall be withdrawn slowly as the elevation of the fresh concrete rises in the shaft. The discharge end of the pipe or hose shall be kept at least 5 ft below the surface of the cement concrete after the cement concrete has reached a depth of 5 ft. When lifting the pump line during concreting, the Contractor shall temporarily reduce the line pressure until the orifice has been repositioned at a higher level in the excavation. During cement concrete placement, markings on the tremie pipe or pump hose or a sounding device or other appropriate method shall be provided and maintained to determine the relative elevations of the fresh cement concrete surface and the bottom end of the pipe or hose.

For wet excavations, a plug or similar device shall be used to separate the concrete from the fluid in the hole until pumping begins. The plug shall either be removed from the excavation or be of a material, approved by the Engineer, which will not cause a defect in the shaft if not removed.

If for any reason, the tremie/pump line is removed during concrete placement, the line must be resealed at the bottom and once again embedded sufficiently below the level of concrete at which the tremie pipe was removed prior to continuation of the pour. Concrete placement can then be continued until fresh uncontaminated concrete has overflowed the top of the shaft. All contaminated concrete must be removed exposing the clean concrete in the shaft.

D. Free Fall Concrete.

The free fall placement of cement concrete shall only be permitted in dry holes. The maximum height of free fall placement shall not exceed 25 ft.

Drop chutes shall be used to direct placement of cement concrete to the base of the excavation, where the maximum depth of water shall not exceed 3 in., without hitting either the steel reinforcement cage or hole sidewall. Drop chutes shall consist of a smooth tube of either one-piece construction or sections that can be added and removed. Cement concrete may be placed through either a hopper at the top of the tube or side openings as the drop chute is retrieved during concrete placement. The drop chute shall be supported so that the free fall of the concrete measured from the bottom of the chute is less than 25 ft at all times.

If placement cannot be satisfactorily accomplished by free fall in the opinion of the Engineer, the Contractor shall use either tremie or pumping to accomplish the placement of cement concrete.

E. Casing Removal.

If a temporary casing is used during drilled shaft construction, casing removal shall not start until the level of fresh cement concrete within the casing has reached a depth of 10 ft.

As the temporary casing is withdrawn, a minimum 5 ft head of concrete above the bottom of the casing shall be maintained.

The elevation of the top of the steel reinforcement cage and the elevation of the top surface of the shaft cement concrete shall be checked before and after temporary casing extraction. Any upward or downward movement of the steel reinforcement cage or any large downward movement of the surface of the concrete during casing extraction shall be cause for rejection of the shaft. A slight downward movement of the casing while exerting downward pressure or hammering or vibrating the casing will be permitted to facilitate extraction. Casing that cannot be extracted during or immediately after the cement concrete placement operation shall also be cause for rejection of the shaft. A repair plan (or a structural evaluation for temporary casing not extracted from the shaft excavation) for all rejected shafts shall be submitted to the Engineer for approval.

The tops of permanent casings shall be removed to the top of the drilled shaft or the finished ground line, whichever is lower. The tops of permanent casings for shafts constructed in a permanent body of water shall be removed to the low water elevation.

945.60: Inspection

A. General.

Nondestructive Evaluation (NDE) tests shall be performed on all completed drilled shafts as directed by the Engineer. Such tests may include cross-hole acoustic tests, sonic echo tests, and other specified NDE tests.

B. Cross-hole Sonic Testing.

Cross-hole sonic logging (CSL) is a down-hole ultrasonic test method used to evaluate the condition of the concrete within drilled shafts. The test shall meet ASTM D6760 requirements as modified herein.

This method involves using a piezo-electric transducer (emitter), to generate a signal that propagates as a sound wave (sonic) within the concrete, and another transducer (receiver) is used to detect the signal. Both transducers are placed into a vertical steel pipe filled with water that acts as a coupling medium between the transducer and the tube. These pipes are attached to the reinforcement cage.

The transducers are lowered to the bottom of their respective pipes and placed in the same horizontal plane. The emitter transducer generates a sonic pulse that is detected by the receiver in the opposite pipe. While the pulses are generated, the two transducers are simultaneously raised within the pipes until they reach the top of the drilled shaft. This process is repeated for each possible pipe combination.

The existence of a flaw or defect (void, soil inclusion, or necking within the shaft) will slow down the signal. The signal arrival times are plotted with depth to generate a log for the particular pipe combination. In addition, the energy of each signal (integration of the amplitude with time) is also

plotted with depth. Lower energy or longer arrival times would indicate the occurrence and location of the defects.

1. Requirements.

Provisions for sonic testing shall be made for all shafts. The testing subcontractor and test method to be used for sonic testing shall be approved by the Engineer. A record of experience of the testing subcontractor shall be submitted to the Engineer along with written description of the testing procedures, operation manuals for the testing equipment, and samples of previous test results indicating both sound and defective shaft.

2. Installation of Pipes.

The Contractor shall furnish and install a minimum of four 1.5-in. to 2-in. internal diameter steel pipes to provide access for sonic testing in each drilled shaft. The pipes shall be installed such that all internal joints are flush.

If the number and placement of the pipes are not called out in the construction drawings, then the following guidelines shall be used:

Table 945.60-1: Pipe Requirements Based Upon Shaft Diameter

Shaft Diameter ≤5 ft	4 Pipes (Minimum)
5 ft < Shaft Diameter ≤8 ft	6 Pipes (Minimum)
Shaft Diameter >8 ft	8 Pipes (Minimum)

The steel pipes shall be connected so that the transducers can pass through unobstructed. The tubes shall be clean from any corrosion or dirt to ensure a good bond between the tube and concrete. The pipes shall be watertight (including at joints) and capped at the bottom and the top. The top cap must be removable (i.e. threaded) for access of the transducers during testing.

The pipes shall be attached to the interior of the reinforcement cage or as specified in the contract documents. However, if the clear spacing between longitudinal bars is less than 5 in., the pipes shall be offset from the rebar cage by 3 in. toward the center of the shaft. The pipes shall be located in a symmetric pattern depending on the size of the shaft and the number of pipes. Tie wire or spacers shall be used to attach the pipes to the reinforcement cage so that they remain as vertical and parallel as possible during cage installation. The pipes shall extend from 6 in. above the bottom of the shaft to 3 ft above the top of the shaft, or ground surface, whichever is higher. The pipes shall not be placed on the bottom of the shaft.

The pipes shall be full of clean water prior to cement concrete placement. The caps must be sealed to prevent debris from entering the pipes after the water is placed. The pipes must be handled with care during installation and capping (i.e. no twisting or impacting). After completion of CSL testing and upon approval of the Drilled Shaft by the Engineer, the water shall be removed from the pipes to be completely filled with a cement or sand-cement grout.

3. Sonic Logging Equipment.

The Sonic Logging equipment furnished by the Contractor shall consist of the following components:

- Ultrasonic emitter and receiver probes capable of producing records with good signal amplitude and energy through concrete.
- A measurement wheel or other suitable linear measuring device to record the depth of the transducers.
- A microprocessor-based system, with data filtering/amplification and synchronized triggering of records with pulses, that is capable of permanent recording of data, display of individual records, and printing of logs.
- The Contractor shall also furnish all necessary supplies, support equipment, power, and provide reasonable access to the shaft top for performance of the sonic logging.

4. Sonic Logging Test Procedure.

Completed drilled shafts shall be tested between 1 and 7 days after placing of cement concrete. Information on the drilled shafts to be provided to the CSL consultant shall include: Shaft bottom and top elevations, pipe lengths and positions, and construction dates including cement concrete placement.

Sonic Logging shall be performed between all possible tube combinations. Tests shall be performed in the same horizontal plane in all pairs of pipes directly across from each other. Tests involving different horizontal planes would be conducted if requested by the Engineer or when necessary to further evaluate defects.

The probes shall be raised simultaneously from the bottom of the pipes by winch ensuring that all slack is taken out of the cables before the analyzer is switched on. The speed of ascent should be less than 1 ft per second. A depth wheel or similar measuring device shall be used to provide accurate depth measurements. Measurements shall be taken at 0.2 ft intervals or as otherwise directed by the Engineer.

5. Results of Testing.

The Contractor shall provide a CSL Report signed by a Professional Engineer providing the results and recommendations for acceptance or correction of each shaft tested. The report shall include the following:

- The cross-hole sonic logs with potential defects indicated.
- Records of the initial pulse arrival time and energy/amplitude vs. depth for each pipe combination.
- Related interpretation and discussion of the results.

Defects identified by longer arrival times or lower energy signals shall be promptly reported to the Engineer. Any further tests required by the Engineer to evaluate the extent of the defects shall be duly carried out.

6. Acceptance.

Any indicated drilled shaft defects shall require further integrity testing. The Engineer may require other nondestructive tests upon evaluation of the data. These tests may include cross-hole tomography, Single-hole Sonic Logging, Pulse Echo Method, or others.

If the additional tests and records are inconclusive, the Engineer may require coreholes of the defective shaft, at the expense of the Contractor. If the cores show defects in the shaft, these defects shall be repaired at the Contractor's expense by methods acceptable to the Department.

945.61: Drilled Shaft Load Tests

A. General.

When the contract documents include load testing of shafts, the load test shall be completed before construction of any production drilled shafts. The Contractor shall construct a test shaft in accordance with the provisions of the specifications. The Department's Geotechnical Engineer shall be notified at least 2 working days prior to the start of the load test.

The load test can be performed when 75% of the design compressive strength of the concrete for the drilled shaft is achieved as determined from cylinder breaks. The Contractor shall allow 10 working days for analysis of the load test data by the Engineer before estimated drilled shaft tip elevations are provided for production shafts.

Static load tests shall conform to the requirements of ASTM D1143 (vertical load testing-quick test method) and ASTM D3966 (lateral load testing) or as modified herein.

Bi-directional load tests shall conform to the requirements of ASTM D8169 or as modified herein.

Other types of Load Tests may be included in a project's Special Provisions. A detailed Testing Plan, in conformance with the specification requirements, shall be submitted to the Engineer for review and approval.

The contractor shall supply calibration certificates from a certified testing laboratory for each instrument to measure load or movement during the load testing of the drilled shaft.

The number and locations of load tests shall be shown on the plans and/or as designated by the Engineer. The load test shafts shall be loaded to a load equal to 3 times the test shaft design load, or to plunging failure, whichever occurs first. Plunging failure is defined as a deflection of the shaft head equal to 5% of the shaft diameter.

B. Osterberg Cell (Bi-directional or O-cell) Load Test.

This work shall consist of furnishing all materials and labor necessary for conducting an Osterberg Cell Load Test and reporting the results of the test. The Osterberg Cell, herein called the O-cell, is a calibrated bi-directional loading device capable of applying loads upward and downward, when embedded in a drilled shaft. The drilled shaft used for the load test shall be instrumented by the Manufacturer of the O-cell as directed by the Engineer.

1. Manufacturer's Representative and Contractor's Testing Engineer.

The Contractor shall obtain the services of a licensed Professional Engineer, with O-cell load testing experience, to conduct the test in compliance with these specifications, record all data and furnish reports of the test results to the Engineer. The Manufacturer's Representative from the supplier of the Bi-direction Load cell shall be present on site during the installation of the load cell and other instruments required for testing of the shaft, the placement of the concrete for the test shaft and during initial testing.

2. Instrumentation and Materials.

The Contractor shall supply all instrumentation and materials required to install the O-cell, conduct the load test and remove the load test instrumentation and apparatus as required. Instrumentation and materials include, but are not limited, to the following:

a. One (1) or more O-Cell with appropriate capacity and diameter for the test shaft.
b. Two (2) circular steel base plates, which shall be 2 in. thick and welded to the top and bottom of the cell. Also, a beam or pipe, as required by the manufacturer, to support its placement in the test shaft.
c. High strength pumpable grout with a minimum compressive strength of 4,000 psi at the time of testing. The quantity necessary to place a 1- to 3-in. bed below the bottom of the cell will be required. Type III cement may be substituted upon approval of the Engineer.
d. Materials sufficient to construct a stable reference beam system, for monitoring deflection of the shaft, supported at a minimum distance of 3 shaft diameters from the center of the shaft.
e. Materials sufficient to construct a protected work area (such as a tent or shed for protection from direct sun and inclement weather) of sufficient size to accommodate the entire load test apparatus, instrumentation and personnel performing the test.
f. Electric power, as required for lights, welding, instrumentation, etc.
g. Tell-tale extensometers connected to the upper and lower plates of the O-cell, and strain gages applied in pairs at approved intervals throughout the shaft length. The instrumentation shall be able to provide the distribution of stresses along the shaft length and to distinguish bottom displacement from top displacement of the tested shaft.
h. Clean water from an approved source to mix with a water-soluble oil to be provided by the manufacturer's representative, to form the hydraulic fluid pressure used to pressurize the O-cell.

3. Equipment.

The Contractor shall supply equipment required to install the O-cell, conduct the load test, and remove the load test apparatus. Equipment includes but is not limited to:

a. Welding equipment and certified welding personnel, as required to assemble the test equipment, attach pipes, plates and fittings to the O-cell.
b. A suitable pressurized gas source consisting of either an air compressor or of compressed nitrogen.
c. Equipment and operators for handling the O-cell and piping during the installation of the cell and during the conducting of the test, including but not limited to a crane or other lifting device(s) for the cell piping, manual labor, and hand tools as required by the manufacturer's representative.
d. Equipment and labor sufficient to erect the protected work area and monitoring reference beam system, to be constructed to the requirements of the Engineer and the manufacturer’s representative.

4. Procedures.

The O-cell, piping and other attachments will be assembled and made ready for installation under the direction of the manufacturer of the load cell in a suitable area, adjacent to the test shaft, to be provided by the Contractor.

When a reinforcing steel cage is required for the test shaft, the O-cell assembly shall be welded to the bottom of the cage in conjunction with the construction of the cage. If a rebar cage is not required, the load cell and piping shall be supported during installation by suitable means such as two channel beams attached on each side.

When excavation for the test shaft has been completed, inspected, and accepted by the Engineer, a seating layer of concrete or grout shall be placed, by an approved method, at the base of the shaft. The Contractor shall then install the O-cell under the direction of the manufacturer and the Engineer such that the cell is resting firmly in the bed of grout or concrete. The Contractor shall use utmost care in handling the test equipment assembly so as not to damage the instrumentation during installation. Alternatively, the O-cell and its support system can be lowered to near-bottom of the shaft and the center pipe from the cell can be used to grout the space between the cell and the bottom of the shaft so as to firmly seat the cell.

After installation of the cell, the drilled shaft shall be concreted in a manner specified above. However, the Contractor may use high early cement (Type III) in the mix to reduce the time between concreting and testing, when approved by the Engineer.

The load sequence shall be as follows:

a. Apply 5% of the anticipated ultimate capacity of the test shaft, in load increments at 5-minute intervals until the maximum capacity of the cell is reached or until the shaft has failed as determined by the Engineer.
b. At the maximum load or failure load (as determined by the Engineer), maintain the load for a minimum of ½ hour.
c. Remove the load in 10% load increments at 5-minute intervals until zero load is reached.
d. At each load increment, or decrement, movement indicators shall be read at a minimum of 1-, 2- and 4-minute intervals while the load is held constant.

During the period required to perform the load test, no drilling or excavation operations on any shaft may be performed. If test apparatus shows signs of negative effects due to other construction activities, such activities shall be halted for the duration of the test. After completion of the load test the contractor shall remove any equipment, material, waste, etc., which are not to be part of the finished structure.

5. Report.

The contractor will supply a report in PDF format for each load test detailing the load-movement curves and test data. The report shall be reviewed and approved by the Engineer.

945.62: Defective Drilled Shafts

Defective drilled shafts are defined as exhibiting flaws that result in inadequate performance (deflections criteria) or unsafe performance (capacities criteria) under the shaft design loads, as determined by the Engineer, based on the shaft construction records, NDE, and load test data.

The Contractor shall submit a plan for remedial action to the Engineer for acceptance. Modifications to the structural integrity and/or load transfer mechanism caused by the remedial action shall require that calculations and working drawings stamped by a Professional Engineer registered in the Commonwealth of Massachusetts for all elements affected, be provided. All labor and materials necessary to complete the remedial work shall be furnished without cost to the Department.

COMPENSATION

945.80: Method of Measurement

Drilled shaft excavation will be measured for payment on a length basis by the foot of completed drilled shaft excavation of the diameter shown on the plans measured along the centerline of the shaft from the bottom to the top of the completed shaft excavation or as indicated on the plans, less the measured length of obstruction excavation and less the measured length of rock socket excavation. Measurement shall be to the nearest 0.1 ft.

Rock socket excavation will be measured for payment on a length basis by the foot of completed rock socket excavation of the diameter shown on the plans measured from the highest point of encountered rock within the excavation to the bottom of rock socket. Measurement shall be to the nearest 0.1 ft.

Obstruction excavation, after designation as obstruction excavation by the Engineer, will be measured for payment on a length basis by the foot of completed obstruction excavation of the shaft diameter indicated on the plans. Measurement shall be to the nearest 0.1 ft.

Trial drilled shafts that are accepted, including backfill when required, will be measured for payment by the foot of completed trial drilled shaft of the diameter shown on the plans measured along the centerline of the trial shaft from the bottom of completed trial shaft to the top of the completed trial shaft or as indicated on the plans. Measurement shall be to the nearest 0.1 ft.

Drilled shafts, of the cement concrete and steel reinforcement as shown on the plans, will be measured for payment on a length basis by the foot of completed drilled shaft of the diameter shown on the plans measured along the centerline of the shaft from the bottom of the rock socket or shaft excavation to the top of the completed shaft or as indicated on the plans. Measurement shall be to the nearest 0.1 ft.

Permanent casing will be measured for payment on a length basis by the foot of permanent casing of the diameter shown on the plans measured along the centerline of the shaft from the bottom to the top of the permanent casing. Measurement shall be to the nearest 0.1 ft.

CSL access pipes will be measured on a length basis by the number of feet of pipes installed and grouted (upon acceptance of testing) regardless of whether sonic testing is performed.

CSL sonic testing shall be measured on an each basis per shaft tested.

Osterberg load cell axial load testing shall be measured on an each basis per shaft tested.

Conventional axial load testing shall be measured on an each basis per shaft tested.

945.81: Basis of Payment

Drilled shaft excavation will be paid at the contract unit price per foot of completed drilled shaft excavation of the diameter shown on the plans. Payment for drilled shaft excavation shall be considered complete compensation for temporary casing, water control, removal from the site and disposal of excavated materials, using slurry as necessary, tools and drilling equipment to excavate the shaft, and furnishing all other labor, materials and equipment necessary to complete the drilled shaft excavation. If larger diameter drilled shaft excavation than that specified on the plans is performed at the Contractor's option, no additional compensation will be provided to perform this oversized drilled shaft excavation.

Rock socket excavation will be paid at the contract unit price per foot of completed rock socket excavation of the diameter shown on the plans. Payment for rock socket excavation shall be considered full compensation for water control, removal from the site and disposal of excavated materials, drilling equipment, procedures to excavate the rock socket to the required depths, and all labor, materials, equipment, and tools necessary to complete the rock socket excavation. If larger diameter rock socket excavation than that specified on the plans is performed at the Contractor's option, no additional compensation will be provided to perform this oversized rock socket excavation.

Obstruction excavation, after designation as obstruction excavation by the Engineer, will be paid at the contract unit price per foot of completed obstruction excavation of the shaft diameter indicated on the plans. Payment for obstruction excavation shall be considered full compensation for water control, removal from the site and disposal of excavated materials, drilling equipment, procedures to excavate the obstruction to the required depths, and all labor, materials, equipment, and tools necessary to complete the obstruction excavation. If larger diameter obstruction excavation than that specified on the plans is performed at the Contractor's option, no additional compensation will be provided to perform this oversized obstruction excavation.

Trial drilled shafts that are accepted will be paid at the contract unit price per foot of completed trial drilled shaft of the diameter shown on the plans. Payment for trial drilled shafts shall be considered full compensation for the excavation of the trial shaft hole through whatever materials are encountered to the authorized bottom of trial shaft, including obstructions, temporary casings, backfilling the hole with unreinforced concrete, restoring the site as required, and all other incidentals necessary to complete the trial drilled shaft. If larger diameter trial drilled shaft than that specified on the plans is performed at the Contractor's option, no additional compensation will be provided to perform this oversized trial drilled shaft.

Drilled shafts, of the diameter, cement concrete and steel reinforcement as shown on the plans, will be paid at the contract unit price per foot of completed drilled shaft. Payment for drilled shafts shall be considered full compensation for all cement concrete, steel reinforcement, labor, materials, equipment, and all other incidentals necessary to complete the drilled shaft. This payment shall include all cement concrete and steel reinforcement that extends into rock sockets, if any, and all steel reinforcement that is embedded in the shaft and extends above the top of the shaft to the point where it connects to any steel reinforcement that is not embedded in the drilled shaft. Bracing, centering devices, and support devices for the steel reinforcement cage shall be considered incidental to the work. If a larger diameter drilled shaft than that specified on the plans is

constructed at the Contractor's option, no additional compensation will be provided to perform this oversized drilled shaft construction.

Permanent casing shall be paid at the contract unit price per foot of permanent casing of the diameter shown on the plans furnished and installed in the drilled shafts. Payment for permanent casing shall be considered full compensation for all labor, materials, equipment, and all other incidentals necessary to complete the permanent casing.

CSL access pipes shall be paid at the contract unit price per foot pf access pipe installed. Payment for CSL access pipes shall be considered full compensation for the supply and installation of the pipe and the grouting of the pipes after testing.

CSL sonic testing shall be paid at the contract unit price per shaft tested. No payment shall be made for supplementary sonic logging testing required to further evaluate any shaft defects detected by the initial CSL sonic test. Payment for CSL sonic testing shall be considered full compensation for the performance of the test, including all labor, equipment, and materials incidental to the test instrumentation, data collection, and report.

Osterberg load cell axial load testing shall be paid for at the contract unit price per each Osterberg load cell axial load test completed and accepted. Payment for Osterberg load cell axial load testing shall be considered full compensation for the performance of the load test, including all labor, equipment, and materials incidental to the test instrumentation, data collection and report (and subsequent removal of test apparatus and appurtenances) prepared under the direction of the Contractor's Testing Engineer and the Manufacturer's Representative.

Conventional axial load testing shall be measured on an each basis per shaft tested.

945.82: Payment Items

945.1*	Drilled Shaft Excavation *Feet Diameter	Foot
945.2*	Rock Socket Excavation *Feet Diameter	Foot
945.3*	Obstruction Excavation *Feet Diameter	Foot
945.4*	Trial Shaft *Feet Diameter	Foot
945.5*	Drilled Shaft *Feet Diameter	Foot
945.6*	Permanent Casing *Feet Diameter	Foot
945.71	Cross Hole Sonic Testing Access Pipes	Foot
945.72	Cross Hole Sonic Test	Each
945.81	Osterberg Load Cell Axial Load Test	Each
945.82	Conventional Axial Load Test	Each

* = as per Department Standard Nomenclature.

SUBSECTION 950: SHEETING

DESCRIPTION

950.20: General

This work shall consist of furnishing and placing lumber, wood or steel sheeting of the kinds and dimensions required, complying with these specifications, where indicated on the plans or where directed. All dimensions specified for lumber are nominal dimensions.

MATERIALS

950.40: General

Materials shall meet the requirements specified in the following Subsections of Division III. Materials:

Lumber Sheeting.....M9.05.0
Wood Sheeting.....M9.05.0
Steel Sheeting.....M8.05.4

CONSTRUCTION METHODS

950.60: General

Work shall not be started until all materials and equipment necessary for their construction are either on the site of the work or satisfactorily available for immediate use as required. Sufficient labor and equipment shall be employed to insure the completion of the excavation, placing of the concrete and backfilling in the shortest possible time.

Where no other direction is given, sheeting shall be driven to such depth that the footing may be lowered at least 2 ft below the elevation shown on the plans without any change in the sheeting as driven.

Sheeting that is to be paid as sheeting left in place shall be driven to a minimum depth of 5 ft below the proposed bottom of the concrete footings. After sufficient progress has been made on the construction the sheeting shall be cut off at the tops of the footings or as otherwise directed.

950.61: Placing of Sheeting

The sheeting shall be securely and satisfactorily braced to withstand all pressures to which it may be subjected and be sufficiently tight to prevent any flow of water or material into the space in which concrete is deposited. The bottom edge of each piece of lumber and wood sheeting shall be so sharpened as to lead the toe of the sheeting away from the excavation. Jetting may be done only with the approval of the Engineer, but it will not be permitted when excess of water may endanger railroad tracks or other structures.

Where sheeting is to be used as a form for placing concrete the sheeting shall be driven entirely outside the neat lines shown on the plans for the concrete.

When, in the Engineer's judgment, the foundations must be altered to such an extent that changes must be made in the depths to which sheeting has been driven, or the area enclosed by the sheeting

must be changed, the Contractor shall make the directed changes in accordance with the provisions of Subsection 9.03: Payment for Extra Work.

950.62: Cut-Off

The sheeting shall be driven down or cut off to the elevation shown on the plans or directed by the Engineer. No sheeting may be left so as to create a possible hazard to navigation of a stream, safety of the public, obstruction to flow of water, or a hindrance to traffic of any kind.

950.63: Care Near Railroads

When sheeting is driven adjacent to railroad tracks, the Contractor shall keep on the work site, quickly available for use. such equipment and operators needed to immediately burn or cut off any sheeting that cannot be driven into the clear before the arrival of trains.

950.64: Disposal of Cut-off and Waste Materials

No cut-off shall be allowed to float away in a stream or left in such a manner as to obstruct the flow of water.

All cut-off will become the property of the Contractor and shall be removed by them from the site.

At the option of the Contractor, steel sheeting cut-offs may be used as sheet piling or pans of sheet piling. If welding is used, such welds shall be full butt-welds designed to develop the full strength of the sheet pile, both in bearing and bending, and shall conform with any of the prequalified joints shown in the specification for welded Highway and Railroad Bridges of the American Welding Society.

950.65: Defective Work

The responsibility for the exact satisfactory construction and maintenance of sheeting complete in place shall rest with the Contractor and any work done which in the performance of incidental construction is not acceptable for the intended purpose shall be either repaired or removed and reconstructed by the Contractor at their expense.

COMPENSATION

950.80: Method of Measurement

The items of Lumber Sheeting, Wood Sheeting, or Steel Sheeting will be a pay item only if indicated on the plans or in the Special Provisions to be left in place or when ordered left in place by the Engineer as a permanent part of the foundation. Otherwise the Contractor may remove or abandon the sheeting, but only to the extent permitted by the Engineer.

Lumber or Wood Sheeting, when indicated on the plans or in the Special Provisions to be left in place or when ordered by the Engineer to be left in place as a permanent part of the foundation, will be measured by the MBF of lumber or wood sheeting. The quantity to be paid for will be the area of sheeting left in place multiplied by the nominal thickness.

Steel sheeting, when indicated on the plans or in the Special Provisions to be left in place or when ordered by the Engineer to be left in place as a permanent pan of the foundation, will be measured by the pound. The weight of the quantity to be paid for shall be calculated on the basis of 22 psf of

wall in place. No additional compensation will be allowed if a heavier sheeting is used unless such heavier sheeting is specified in the Special Provisions, or shown on the plans.

950.81: Basis of Payment

Steel sheeting, when indicated on the plans, in the Special Provisions, or when ordered by the Engineer, to be left in place as a permanent part of the foundation, will be paid for at the contract unit price per pound under the item for Steel Sheeting. The contract unit price per pound shall also include full compensation for anchors, when required, for the sheeting.

Lumber or Wood when indicated on the plans or in the Special Provisions to be left in place or when ordered by the Engineer in writing to be left in place as a permanent part of the foundation will be paid for at the contract unit price per MBF for Lumber Sheeting or Wood Sheeting.

No direct payment will be made for any sheeting not indicated on the plans or in the Special Provisions or not ordered in writing by the Engineer to be left in place as a permanent part of the foundation. Such sheeting will be considered as incidental work necessary for the proper prosecution and protection of the work during construction operations and compensation therefor shall be included in the prices bid for the various items of work for which the sheeting was used. If the Contractor elects to leave such sheeting in place with the approval of the Engineer, no payment will be made for same as sheeting left in place.

For purposes of partial payment, except as noted below, the sheeting item will be considered 90% done when the sheeting has been completely driven and the area within the sheeting is ready for such work as may be required to be done therein. Tile sheeting item will be considered completed when the sheeting has been cut at the required elevation.

950.82: Payment Items

950. Lumber Sheeting ..... MBF
951. Wood Sheeting ..... MBF
952. Steel Sheeting ..... Pound

SUBSECTION 955: TREATED TIMBER

DESCRIPTION

955.20: General

Treated timber shall be used where indicated on the plans and where directed.

MATERIALS

955.40: General

Material shall meet the requirements specified in the following Subsections of Division III, Materials:

Wood Products M9.05.1
Wood Preservative M9.05.5
Fastenings M8.01.5
Tar Paper M9.06.2

CONSTRUCTION METHODS

955.60: General

Treated timber shall be carefully handled, stored, and fabricated in accordance with AWPA M4 without sudden dropping, breaking of outer fibers, bruising or penetrating the surface with tools. It shall be handled with rope slings. Cant hooks, peaveys, pikes or hooks shall not be used. Borings, cuts, holes and other machining of wood shall be done prior to preservative treatment whenever possible. All cuts, holes, and injuries such as abrasions which occur after preservative treatment shall be field treated in accordance with AWPA M4. The Contractor shall provide the Engineer with a written copy of AWPA M4 Treatment Specification before any field treatment work is performed.

A washer, of the size and type specified, shall be used under all bolt heads and nuts which would otherwise come in contact with timber. The nuts of all bolts shall be effectively locked after they have been finally tightened.

Fastenings shall conform to M8.01.5: Anchor Bolts, Nuts and Washers for anchoring bridge bearings.

Stringers and other members supporting planking shall be capped with tar paper.

955.61: Inspection

All materials will be inspected either at the place of manufacture or upon arrival at the site where it is to be used. All materials not conforming in every detail with the requirements of these specifications will be rejected and removed from the work by the Contractor.

COMPENSATION

955.80: Method of Measurement

All treated timber used will be measured by MBF, in place.

The quantities will be measured according to the following dimensions:

For wheel guards, sleepers, blocking, bracing, isolated timbers and similar lumber, the nominal size of the timber and the actual length in place.

For platforms, decks and similar lumber, the nominal thickness of plank and the overall area, with no deduction for directed spaces between planks.

No allowance will be made for waste or cut-off.

955.81: Basis of Payment

Treated timber will be paid for at the contract unit price per MBF measured under the item for Treated Timber complete in place.

955.82: Payment Items

955. Treated Timber ..... MBF

SUBSECTION 960: STRUCTURAL STEEL AND MISCELLANEOUS METAL PRODUCTS

DESCRIPTION

960.20: General

This section shall apply to the furnishing, fabrication, erection and coating of all structural steel and metal work in the contract.

MATERIALS

960.40: General

Materials shall meet the requirements specified in the following Subsections of Division III - Materials:

Structural Steel M8.05.0
Stud Shear Connectors M8.04.1
Steel Pins M8.04.2
High Strength Bolts M8.04.3
Bronze Self-Lubricating Bearing Plates M8.11.0
Iron Casting M8.03.0
Paints and Protective Coatings M7.00.0
Steel Baffles & Drainage Troughs M8.05.3

If a Contractor proposes to use steel from sources other than a mill, the source must be approved by the Engineer. The Contractor shall supply the Engineer with a description of the proposed facility along with the method used by the facility to segregate, identify and otherwise assure the Engineer that the supplied material is in conformance with the specifications. All sources must supply the actual mill test reports prior to the start of fabrication. Material shall be identified with the MassDOT contract number, material specification, and heat number.

CONSTRUCTION METHODS

960.60: Shop Drawings

After the contract has been awarded, and before any shop work is commenced, the Contractor shall submit complete sets of prints of the shop drawings as specified in Subsection 5.02: Plans and Detail Drawings.

On projects that contain more than one bridge, each bridge will be considered separately in submitting shop drawings.

Shop work may commence on each bridge when the entire set of shop drawings for that bridge are approved.

On projects which contain complicated steel structures such as a viaduct, long span bridge, etc., the Contractor shall submit a schedule showing how they intend to divide the steel structure into sections. After this schedule is approved, shop work may commence on each section as the shop drawings for that section are approved.

Fabrication shall not begin until the drawings are approved. Work performed prior to shop drawing approval is at the contractor's risk and may require additional inspection, NDT, or partial disassembly/reassembly to satisfy the Verification Inspector.

960.61: Design, Fabrication and Erection

All structural steel and appurtenant material shall be designed, fabricated, coated and erected in accordance with these specifications, the AASHTO *Standard Specifications for Highway Bridges*, and the AASHTO/AWS *Bridge Welding Code* (ANSI/AASHTO/AWS D1.5). All aluminum material shall be designed, fabricated and erected in accordance with these specifications, the *AASHTO Standard Specifications for Highway Bridges*, and the AWS St*ructural Welding Code - Aluminum* (ANSI/AWS D1.2). All stainless-steel material shall be designed, fabricated, and erected in accordance with these specifications, the AASHTO *Standard Specifications for Highway Bridges*, and the AWS *Structural Welding Code – Stainless Steel* (ANSI/AWS D1.6). All steel tubular material shall be designed, fabricated, and erected in accordance with these specifications, the AASHTO *Standard Specifications for Highway Bridges* or the AASHTO *Standard Specifications for Highway Signs, luminaries, and Traffic Signals*, and the AWS *Structural Welding Code - Steel* (ANSI/AWS D1.1).

FABRICATION.

Fabricators.

Fabricators shall be approved for work in one or more of the following three categories; Major Bridge Structures, Simple Bridges and Miscellaneous Steel Fabrication, or Poles, Sign Supports, Etcetera. Fabricators approved to perform work in the Major Bridge Structures category are also approved to perform work in the Simple Bridges and Miscellaneous Steel Fabrication category. Fabricators of major bridge structures including rolled beams with coverplates, girders, and more complex work shall meet the requirements of AISC Category Major Steel Bridges with the Fracture Critical Endorsement if applicable. Fabricators of simple bridges and miscellaneous steel, which includes rolled beams without coverplates, steel products such as expansion joints, bridge rail, etcetera shall meet the requirements of AISC Category Simple Steel Bridges. Fabricators of poles and sign supports shall meet the requirements of AISC Category Simple Steel Bridges. A list of approved fabricators may be obtained from the MassDOT website at www.mass.gov/dot.

Fabricators wishing to be approved by the Department shall submit the following:

1. Description of facility including history, capacity and equipment.
2. QC Manual
3. Table of Organization
4. Welding Procedure Specifications and Welding Procedure Qualification Test Records.
5. Welder and Welder Operator Qualification Test Records.
6. Resumes of supervisory personnel and resumes of all personnel involved in quality assurance, QC and testing.
7. Copy of American Institute of Steel Construction Quality Program Certificate.

After receiving the material listed above, the Engineer shall review it and conduct a shop inspection before approval may be granted.

The Contractor shall submit a shop schedule to the Engineer. The shop schedule shall be provided sufficiently in advance for the Engineer to determine the level of verification inspection required and to arrange for the inspector's attendance. The shop schedule shall include the date fabrication will begin, the approximate date it will be completed, and hours of operation including time and date work is to be performed on all shifts. A revised schedule may be submitted at any time. No material shall be fabricated until the shop schedule has been reviewed. No work shall be performed on second and third shifts unless specifically indicated on the shop schedule.

The Contractor will be required to submit to the Department's Inspector, for approval, three certified copies of the mill test reports for each heat number of steel and aluminum furnished. These certificates shall certify compliance with the specifications and shall give the chemical and physical analysis of the metal. Any cost involved in furnishing the certificates shall be considered incidental to the work. These reports shall be given to the Verification Inspector in advance of shipping so that this inspector has sufficient time to properly review the reports. No material shall be shipped until the reports are reviewed and approved by the Verification Inspector.

Written procedures shall be submitted by the Contractor and approved by the Engineer for the following fabrication processes: material traceability; hot bending; welding; cambering and heat curving; shop assembly/laydown; postheat and stress-relieving; shop installation of fasteners; and blast cleaning and coating. These procedures may be standardized and are not required to be resubmitted for each project.

Inspection.

QC inspection and testing is the responsibility of the fabricator and shall be performed by a sufficient number of qualified inspectors to guarantee product integrity. QC inspection shall be performed throughout the entire fabrication process from receiving material to shipping the final product.

QC Inspectors at the fabricating shop shall be certified by the American Welding Society in accordance with the provisions of the Standard for Qualification and Certification of Welding Inspectors (AWS QC1). At least one inspector on each shift shall be a Certified Welding Inspector (CWI). The Engineer, upon written request from the fabricator, may accept other certifications or experience and training consistent with AWS QC1. Assistant inspectors may be used to perform specific inspections under direct supervision of a QC Inspector. For projects requiring greater than 1,500 ft^2 of steel surface to be painted, the inspector shall have completed, as a minimum, NACE Level I certification or received other formal training acceptable to the Engineer.

Verification Inspectors will be employed by, and act on behalf of, the Department. The inspector has the authority to act for the Engineer on matters relating to quality including inspection and testing, within the scope of the contract. Verification Inspectors will be assigned at the discretion of the Engineer. The presence or absence of the Verification Inspector does not relieve the Contractor of QC responsibility.

The fabricator shall provide facilities, for the Verification Inspectors, in direct proximity to the work. These facilities shall include a secured office with a desk and chair for each inspector, a file

cabinet provided with a lock, a plan rack and a table adequate to review plans and drawings. The office shall have a minimal floor area of 120 ft^2. The office shall contain a telephone with an outside line suitable for modem communication and a system of heating and cooling that will maintain a temperature of 68°F to 72°F. The fabricator shall also supply ready access to fax and copy machines and adequate parking.

The fabricator shall maintain adequate inspection records. Such records shall be signed by the QC Inspector and provided to the Verification Inspector. No material shall be shipped to the job site until the QC Inspector certifies that the material has met all provisions of the Contract. Such certificate shall be endorsed by the Verification Inspector who then shall place their stamp on the material. The Verification Inspector shall affix their stamp only when the material is ready for shipment and properly loaded on trucks or rail cars. Material delivered to the job site without such stamp affixed will be considered rejected and immediately returned to the Contractor.

Process.

Steel shall be blast cleaned prior to starting fabrication. Fabrication includes, but is not limited to, drilling, cutting, and welding. The blast cleaning shall conform to the SSPC SP10 "Near-White Blast Cleaning."

Heat numbers shall be transferred, in the presence of the Verification Inspector, to all pieces that are to be major component parts of a main member. Main members are considered to be all webs, flanges, coverplates, floorbeams, stringers and diaphragms on horizontally curved girders as well as any other members as specified on the drawings. Heat numbers are not required to be transferred to component parts of secondary members or to minor components of a main member, i.e. stiffeners, clip angles, etc.

For primary members, the plate components and splice plates shall be cut with the direction of rolling parallel to the direction of primary stresses. For those plates thicker than ⅝ in., plane $^3/_{16}$ in. off sheared edges that remain exposed after fabrication.

Welding shall not commence until the welding procedures and welder certifications have been approved by the Engineer. All welding procedures shall conform to the applicable welding code, (i.e. AASHTO/AWS Bridge Welding Code, the AWS Structural Welding Code - Aluminum, AWS Structural Welding Code - Reinforcing Bars, etc.) as determined by the Engineer. Shop welders shall be certified in accordance with the applicable AWS Welding Code as determined by the Engineer. All field welders shall be certified by the Department and possess the Department's Welder Qualification Test Record and the Welder Qualification Certificate.

Material fabricated that does not meet the plans and specifications will not be incorporated into the work. Repair procedures, other than those allowed under the Bridge Welding Code, shall be submitted by the Contractor to the Engineer for approval.

Structural rolled beams shall be cambered to the amount shown on the plans with a tolerance of -0, +½ in. for beams 50 ft or less. For beams greater than 50 ft, the plus tolerance of ½ in. shall be increased by ⅛ in. for each 10 ft or fraction thereof in excess of 50 ft.

Plate girders shall be cambered to the amount shown on the plans with a tolerance as specified in the AASHTO/AWS Bridge Welding Code.

The beams and girders shall be handled and stored in such a manner that they will have the required camber after erection.

When steel beams or girders are to be spliced in the field, they shall be assembled in the no load position in order that the assembly, including camber, alignment, accuracy of punched holes and fit of beam or girder ends may be done in accordance with the requirements of the type of splice. When members are assembled with the webs vertical, they shall be supported at intervals no greater than 20 ft. The requirements of AASHTO for shop assembly shall apply. Reaming of holes shall be performed in accordance with AASHTO. Hand held reamers shall not be used.

All detrimental material, such as oil, grease, dirt, slag, etc. shall be removed from unpainted portions of all weathering steels prior to shipping. Fascia beams/girders shall be reblasted to remove staining and heat marks.

All structural parts shall be provided with adequate drain holes at points where water could otherwise accumulate. Dimensions indicated at expansion joints and similar construction are determined for a temperature of 50°F. The proper adjustments for temperature must be made by the Contractor when the structure is placed at any other temperature.

If steel expansion joint assemblies are used, they must be properly fitted in the shop, after coating, and shipped with a device for maintaining proper spacing and fit as shown on the plans. Bolts on shipping device must be loosened within one hour after concrete is placed, so that movement may take place. The device shall be removed after concrete has set on both sides of the assembly.

Storage and Shipping.

Fabricated material shall be handled with chain softeners and stored in a manner that protects it from damage, facilitates subsequent inspections, and does not compromise the safety of personnel. Proper consideration shall be given to guard against lateral buckling of unsupported beams and girders. Material shall be stored above the ground on skids or other supports. Fabricated material shall be kept free of dirt, grease and other foreign matter and shall be stored in a way to facilitate drainage when stored outside.

Marking and shipping shall conform to AASHTO Division II Section 11. Hold down softeners shall be used to prevent chain marks on the material during shipment. Structural members shall be shipped in the upright position. Structural members shipped on truck beds or supported on dollies shall not cantilever behind same in excess of 25% of their length. Other shipping configurations shall require calculations by a licensed professional engineer that demonstrate that the member will not be overstressed during shipment. The calculations shall use a load, including impact, of not less than 300% of the dead load.

Connections Using High Strength Bolts.

The certification, testing, installation and inspection for all high strength bolts shall conform to the requirements of the current edition of the AASHTO Standard Specifications for Highway Bridges, except as amended herein.

A. Documentation.

Mill Test Reports shall be furnished for all mill steel used in the manufacture of bolts, nuts or washers. These reports shall indicate the place where the material was melted and manufactured.

The manufacturer shall furnish Manufacturers Certified Test Reports for the items supplied. These reports shall show the relevant information required. The manufacturer performing the rotational-capacity test shall include in the test report:

1. The lot number of each item tested.
2. The rotational-capacity lot number.
3. The results of all tests.
4. The location and date of tests.
5. A statement that the Manufacturer's Certified Test Report for the items are in conformance to this specification and the appropriate AASHTO specifications.
6. The location where the bolt assembly components were manufactured.

The Distributor shall include the Manufacturer's Certified Test Reports for the various bolt assembly components. The rotational-capacity test may be performed by the distributor (in lieu of the manufacturer) and reported on a Distributor Certified Test Report. This report shall show all the information required on the Manufacturers Certified Test Report. The Distributor shall certify that the manufacturer's reports are in conformance to this specification and the appropriate AASHTO specifications.

B. Installation.

All bolting shall be performed using the calibrated wrench method or the turn of the nut method in accordance with the current edition of AASHTO. Regardless of the tightening method used, particular care should be exercised so that the snug tight condition is achieved. In addition, the rotational-capacity tests described in M8.04.3: High Strength Bolts shall be performed at the job site on each rotational-capacity lot number prior to the start of bolt installation. Hardened washers are required as part of the test even though they may not be required in the actual bolt assembly.

A Skidmore-Wilhelm Calibrator or an acceptable equivalent tension measuring device shall be required at each job site during erection. The Contractor shall submit to the Engineer a certification that the calibration device has been checked by qualified personnel acceptable to the Engineer within the previous thirty days. The device must also be checked for accuracy upon completion of the work on the project and proof of this certification must be submitted to the Engineer.

C. Shipping.

Bolts, nuts and washers from each rotational-capacity lot shall be shipped in the same container. If there is only one production lot number for each size of nut and washer, the nuts and washers may be shipped in separate containers. Each container shall be permanently marked with the rotational-capacity lot number such that identification will be possible at any stage prior to installation. Bolts, nuts and washers shall remain in their original container(s) until installation. If it is necessary to place the bolts in a different container, these new containers shall be labeled with all appropriate information and be shipped with a copy of the original documentation. The new containers shall be stamped by the Verification Inspector prior to shipping to the job site.

Nondestructive Testing.

Personnel performing radiographic, magnetic particle and dye penetrant tests shall be certified by a Level III technician who shall have attained certification by examination. Personnel performing radiographic, magnetic particle and dye penetrant tests shall be qualified in accordance with the

current edition of the American Society for Nondestructive Testing, Recommended Practice SNT-TC-1A. Only individuals qualified for NDT Level II and certified as noted above may perform these tests.

When ultrasonic testing is required, it shall be performed by technicians who meet the Level II qualifications above and who shall be qualified by a written examination and performance test administered by the Engineer. The Engineer, at their discretion, may accept other properly documented certifications and tests.

Nondestructive testing shall be performed by the Contractor in accordance with the procedures and standards set forth in the AASHTO/AWS Bridge Welding Code or other applicable code. The Department reserves the right to perform additional testing at its own cost during fabrication and up to final acceptance of the project. All welding must meet acceptable quality standards which are defined by the acceptance criteria for the particular test method.

All nondestructive testing shall be witnessed by the Department's Verification Inspector. Certification that all tests were performed in the presence of the Inspector shall be furnished to the Engineer. In addition to that required by the Bridge Welding Code, all radiographs shall be identified as to date, bridge number and girder or beam number. All costs for these tests, including necessary rework and repair, shall be at the Contractor's expense. A copy of all NDT reports shall be given to the Verification Inspector.

Heat Cambering and Curving.

A. General.

The Maximum allowable temperatures when applying heat to the steel is 1,200°F for AASHTO M 270M/M 270 Grades 250, 345 and 345W (Grades 36,50 and 50W) steels and 1,100°F for AASHTO M 270M/M 270 Grades HPS345W and HPS485W (HPS50W and HPS70W) steels.

Bending and curving may be accelerated by the use of external forces (preload). The stresses induced due to the preload (including loads induced by the member weight) shall be limited to 25 ksi. Calculations showing the maximum external force to apply shall be submitted to and approved by the Engineer. The Contractor shall show the relationship between the maximum allowable external force and the maximum allowable stress. The external force shall be applied before heating and not increased by external means during heating or cooling. Jacks shall not impede contraction during the cooling phase and they shall not produce local buckling.

Heat patterns shall be marked on the steel prior to heating. The steel shall be brought to the appropriate temperature as rapidly as possible. Heating torches shall be manipulated to avoid overheating of the steel. Care shall be taken to avoid the buckling of relatively thin, wide plates.

The temperature of the steel shall be monitored with temperature sensitive crayons, pyrometers or infrared non-contact thermometers. The temperature shall be measured 5 to 10 seconds after the heating flame leaves the area to be tested. After the steel has cooled to 600°F, rapid cooling with dry compressed air or a water mist is permitted. Care shall be taken to avoid burns when using the water mist.

The steel shall be cooled to below 250°F before applying another set of heat patterns. When using V-heat patterns, a location may be reheated after applying at least three sets of heating patterns at other locations.

B. Heat Curving for Sweep

When the radius is less than 1,000 ft, heat curving shall be performed with the web in the horizontal position or preload to induce stress prior to heating when curving with the web in the vertical position. When heating with the web vertical, the member shall be sufficiently supported so that the member will not deflect laterally, overturn or twist. Intermediate safety catch blocks shall be provided to prevent buckling or excessive local deformations.

C. Heat Curving for Camber

The member shall be supported when heating with the web in the vertical position. The supports shall be spaced to take maximum advantage of the dead load of the member and shall be placed prior to heating. If the web is in the horizontal position, care shall be taken when applying the external force and safety catch blocks shall be used to prevent sudden spring back of the beam in case the jacks slip.

ERECTION.

Within sixty days of the date of the Notice to Proceed, the Contractor shall submit an erection procedure. The submitted method of erection is subject to review, comment, and approval by the Engineer. The method must be submitted with a detailed procedure which includes drawings and calculations sufficient to enable the Engineer to determine the adequacy of the proposed method.

The method and all submissions shall be prepared under the supervision of a professional engineer, registered in Massachusetts, who is familiar with these Specifications, AASHTO, the work, and experienced in this technical field. All submitted sheets shall be stamped by the supervising Engineer.

As a minimum the following information shall be included in the submittal:

1. Plan showing the location of all roadways, utilities, railroad tracks and other appurtenances in areas of erection.
2. The location of cranes, both horizontally and vertically, and their operating radii.
3. Lifting equipment information including rating data. Information shall include counter weights to be used and boom capability. The manufacturer's rated capacity of the crane and of all lifting and connecting devices shall be adequate for 125% of the total pick load including spreaders and other material except that in the areas within the potential influence area of the crane where railroad, vehicular or pedestrian traffic has access, the rated capacity shall be adequate for 150% of the total pick load. The limits of the potential crane influence area shall be taken as circular areas with radii matching the boom length and radius points located at the boom pivot point. Crane capacity rating charts and the rated capacity of all lifting and connecting devices shall be clearly shown in the submittal. The 125% or 150% factors of safety are to be used in addition to any factors of safety used by the manufacturer to calculate the rated capacity.
4. The type, size and arrangements of slings, shackles or other lifting and connecting devices including relative technical data.

5. The order of lifts, repositioning of equipment and counterweights, and location and method of attaching deadmen.
6. Methods and materials for temporary structures or the strengthening or bracing of a member (either temporarily or permanently) for erection purposes.

The stresses shall be investigated at each stage of erection with allowance for wind pressure determined by Table 960.1.

Table 960.61-1: Wind Pressure Allowances

Height of Members Above Ground (ft)*	**Wind Pressure (psf)**	
	Beams & Girders	Trusses
15	21.0	31.5
30	25.5	38.5
50	28.0	42.0
100	32.0	48.0
300	39.0	58.5
*For heights not given wind pressures shall be interpolated.		

Curved girders and long span straight girders shall be stabilized with falsework, temporary braces, or holding cranes until a sufficient number of adjacent girders are erected with all diaphragms and cross frames connected to provide necessary lateral stability. All trusses shall be erected on falsework. The falsework shall provide for proper camber and alignment and shall be properly designed, constructed, and maintained for the loads that will be imposed upon it. When erecting trusses, the falsework shall be left in place until all connections are bolted and accepted by the Engineer. Care shall be taken in the use of falsework and other temporary supports to insure that the temporary elevation of structural steel provided by the falsework is consistent with the deflections that will occur as the structure is completed.

In instances where falsework is required by the contract or proposed as part of the erection procedure, it shall be properly designed, constructed, and maintained for the loads that it will bear. Plans for falsework along with necessary engineering data shall be submitted to the Engineer for review, comment, and approval under the same guidelines as the erection procedure. Plans, details, and calculations shall be submitted to the Engineer in those instances where changes in an existing structure are necessary to maintain traffic

The Contractor shall keep a full record of piles driven for falsework. If the Contractor does not make a pile loading test, the pile bearing formulas of 940.61: Driven Pile Capacity shall be used to determine the bearing values.

Erection drawings shall show bolting or welding procedures necessary to complete erection. Procedures shall include sequence and method of connecting main members and secondary members. For stringer and girder spans, the following minimum information shall be included in the notes, modified as necessary to conform to design and erection requirements for each structure:

1. Splices and field connections of main stress carrying members shall be made with a minimum of 50% of the holes filled with approved high strength bolts and erection pins before the external support system is released. At least one-half of this percentage shall be bolts, tightened to specification requirements. The bolts and pins shall be installed uniformly throughout the connection except that erection pins shall be used in the extreme corners of all main connections.
2. Members to be assembled on the ground before erection shall be blocked to their proper "no load profile" and 100% of the approved high strength bolts shall be installed and tightened to specification requirements before erecting the member.
3. All diaphragms and crossframes shall be installed between stringer lines as the work progresses.
4. Dimensions indicated at expansion joints and similar construction are determined for a temperature of 50°F. Proper adjustments must be made when the structure is placed at any other temperature.

After the erection of beams and girders has been completed, expansion bearing sole plates shall be re-aligned so that they will be centered at 50°F.

960.62: Preparation of Bridge Seats

The bridge seats for the bearing devices shall be prepared in accordance with 901.65: Finishing and Curing, Paragraph A.3: Preparation of Bridge Seat Bearing Areas.

960.63: Painting

General.

The paint system used shall be approved by NEPCOAT. Prior to the start of painting, each batch of paint shall be sampled, tested and approved in accordance with Section M7: Paints, Protective Coatings.

For contracts requiring greater than 1,500 ft² of painted steel surfaces, the contractor or subcontractor performing surface preparation, and field coating of structural steel in the field must be prequalified by the Department in the Painting (Structural) category. For surface preparation and painting in the shop a current AISC Sophisticated Paint Endorsement (SSPE) or SSPC QP3 certification is required.

The prime coat shall be applied in the shop. The remaining coats may be applied in the shop or in the field at the Contractor's option.

Structural steel meeting AASHTO M 270M/M 270 Grade 345W (50W), Grade 485HPS (70HPS) and other weathering steels shall not be painted except when and where specifically called for on the plans. When weathering steel is painted, the finish coat color shall conform to Federal Standard 595B, "Colors Used in Government Procurement", color chip no. 30045.

All structural steel surfaces excluding the surfaces of weathering steel that is to remain uncoated, shall receive three coats of paint. All surfaces of this steel that come in contact with concrete shall be painted with the prime coat only. If the entire paint system is applied in the shop, the steel surfaces in contact with concrete shall receive all three coats. Surfaces not in contact but inaccessible after assembly erection shall be painted in the shop with the prime coat followed by

one coat of coal tar epoxy polyamide paint (M7.05.21) having after application a minimum dry film thickness of 8 mils.

The flange surfaces to which shear studs are to be field welded shall receive a mist coat of the prime coat, having after application a minimum dry film thickness of 1 to 1.5 mils.

The faying surfaces of all field bolted splices and other faying surfaces, except weathering steel in areas where no paint is specified, shall have the faying surfaces painted with the prime coat only. This prime coat shall have a slip coefficient of Class B.

Application of organic zinc, epoxy, and urethane systems shall not be done when the relative humidity is above 85% or when the surface temperature of the steel is less than 5°F above the Dew Point. Paint shall not be applied when the surface temperature is below 40°F or when the surface temperature is above 125°F.

Paint shall not be applied when, in the Engineer's judgment, conditions are or will become unsatisfactory for application and proper cure. All changes as to the application parameters other than specified must be the manufacturer's and presented in writing and approved by the Engineer. Ambient conditions should be closely monitored so that proper cure/drying is achieved prior to recoat. In no case shall a succeeding coat of paint be applied before the previous coat has cured/dried sufficiently for recoat as per manufactured data sheet.

Measurement of the ambient conditions shall be done in accordance with ASTM E337 Test Method for "Measuring Humidity with a Psychrometer" (the Measurement of Wet and Dry bulb Temperatures).

All coats of paint shall be from the same manufacturer. The colors of the shop coat, second coat, and the top coat shall have a definite color contrast between them. The prime coat shall be tinted red or green so as to contrast with the blast cleaned steel.

The application contractor is required to conduct and document QC inspection of the cleaning and painting operations including, at a minimum, measurements of ambient conditions, surface profile, surface cleanliness, coating material acceptability, dry film thicknesses, and visual inspection for coating defects. The data shall be recorded in an applicator log maintained at the painting site and be available for the Owner's review during working hours. This applies to the application of all three coats.

The Contractor shall supply mechanical paint mixers on the job. Paints shall be mixed in clean containers and agitated thoroughly before drawing off paint through a strainer into the painter's buckets or spray machines. Paint shall be kept thoroughly stirred in spray pots or containers during application and the zinc rich primers shall have continuous agitation.

Paints specified are formulated ready for application and if for any reason it is necessary to thin the paint, the method used shall not produce a dry film thickness less than that specified. The method used to thin the paint and the thinner used.

The steel shall not be shipped from the shop to the field in less than 2 days after the application of the last coat of paint.

Bolts nuts and washers shall be solvent cleaned and dried prior to painting.

The contractor shall take appropriate precautions to avoid damaging the coating during erection.

After erection and after the finish coat of paint has been applied, the date (year, month) of painting and the bridge and BIN numbers shall be stenciled on the bridge as directed by the Engineer. The characters shall be 3 in. in height and be furnished by the Contractor at their expense.

Prime Coat.

Steel shall not be painted until shop fabrication is complete. All welds shall be cleaned thoroughly in accordance with good practice and shall have a suitable surface to accept the primer. There shall be no evidence of oil, grease, dirt or other foreign matter on the steel. All surfaces shall be returned to an SSPC SP10 condition. The steel shall have a surface profile of 25 μm (1 mil) minimum and 75 μm (3 mils) maximum measured with a profile depth tape and micrometer. Profile depth tape measurements shall be retained and submitted for the Engineer's approval. The abrasive cleaning material shall meet the requirements of SSPC-AB 1, "Mineral and Slag Abrasives", SSPC-AB2, "Cleanliness of Recycled Ferrous Metallic Abrasives", or SSPC-AB 3, "Newly manufactured or Re-Manufactured Steel Abrasives", and the condition and cleanliness of the recycled abrasives shall be checked daily or as directed by the Engineer.

All sharp corners shall be broken prior to final cleaning (profiling) and prime painting. Sharp corners may usually be removed by a single pass with a grinder. Thermal cut edges (TCE) to be painted shall be ground before final cleaning (profiling).

To provide adequate film thickness in areas or places prone to breakdown, edges, corners, bolts, nuts, and welds shall be striped by brush painting. The paint when applied, shall be so manipulated under the brush as to produce a uniform even coating, conforming to the dry film thickness, as specified by the manufacturer on the surface being painted. Stripe coating of the primer shall be completed prior to the application of the full prime coat. The steel shall then receive one shop coat having after application a minimum dry film thickness of 75 μm (3 mils). Paint shall not be applied to shop contact surfaces. Machined finished surfaces, except abutting joints and base plates, shall be coated with a material suitable to the Engineer.

Intermediate and Finish Coat.

The steel painted in the shop or field shall receive an intermediate coat having after application a minimum dry film thickness of 100 μm (4 mils). Within 24 hours of the application of the intermediate coat, the steel shall receive the finish coat having after application a minimum dry film thickness of 75 μm (3 mils). The manufacturers' recommendations for recoating shall be followed.

When the erection of the steel is fully complete and the intermediate and finish coats are to be put on in the field, all adhering rust, scale, concrete, dirt, laitance, grease, welding flux and slag, white rust or other foreign matter shall be removed from the steel. Immediately after cleaning of the steel has been done to the satisfaction of the Engineer and prior to the application of the first field coat of paint, all steel surfaces that require painting (bolts, welds, etc.); the base metal that has become exposed; or any surface from which the shop coat has become defective shall be thoroughly covered with one coat of the same paint used in the shop. The minimum dry film thickness after application shall be 75 μm (3 mils).

When the erection of the steel is fully complete and the intermediate and finish coats were put on in the shop, all adhering rust, scale, concrete, dirt, laitance, grease, and other foreign matter shall be

removed from the steel. Damaged coating shall be touch-up with the same finish coat that was used in the shop. Exposed steel surfaces including but not limited to bolts and weld metal shall be thoroughly cleaned as stated above and painted in the field with the primer, intermediate and finish coats. The minimum dry film thickness shall be 75 µm (3 mils) for the primer.

Minor coating defects, handling damage and other occasional nonconformances, and destructive test sites shall be repaired in accordance with SSPC-PA 1 and/or the manufacturer's recommendations. The applicator shall submit repair procedures for substantial damage, significant defects, or widespread (gross) nonconformances in the coating for the Engineer's approval. Repairs to the topcoat must result in an acceptable, uniform gloss and color. The Engineer shall have final authority concerning the coating's uniformity and acceptable appearance.

In order to avoid subsequent discoloring or staining due to dripping or running of concrete, the field coats of paint shall not be started until all concrete nearby has been placed and all forms have been removed. Concrete, stone, masonry and other parts of the structure that are not to be painted shall be fully protected by covers during the painting operations. Full protection shall be provided in the field for all private property.

Environmental Protection Requirement for Field Painting.

The Contractor shall design, install, and maintain a containment system in accordance with 961.67: Containment.

960.64: Galvanizing

The following shall be hot dipped galvanized in accordance with Section M7: Paints, Protective Coatings:

1. Diaphragms, cross frames, utility supports and bottom lateral bracing elements that are composed of non-weathering steels or weathering steels designated to be coated.
2. All sole plates and masonry plates (except sole plates for sliding elastomeric bearings).

Galvanized members requiring shop fabrication and assembly shall be cut, welded, and/or drilled prior to galvanizing. Members to be milled shall be galvanized prior to milling. A thin layer of a rust inhibitor shall be applied to the milled surface.

Galvanized members that are to be welded after galvanizing shall be masked 1 in. (25 mm) on either side of the weld line prior to galvanizing. After welding, the weld areas shall be cleaned in accordance with the SSPC-SP3 "Power Tool Clean" and coated with "High Zinc Dust Content" paint meeting M7.04.11. The galvanizing shall be repaired in accordance with ASTM A780 "Repair of Hot Dip Galvanizing". The paint shall be applied such as to achieve a dry film thickness of a minimum of 3 mils (76.2 µm) and not more than 5 mils (127 µm). Application methods shall be in accordance with the manufacturer's recommendations.

960.65: Metallized Sole Plates for Sliding Elastomeric Bearings

This work shall consist of surface preparation and the application of thermal sprayed metal coating (metallizing) on structural steel sole plates for sliding elastomeric bearings. The metallizing process shall consist of melting metal and spraying it on to a prepared surface by means of compressed gas. All steel surfaces shall be metallized with the exception of the area over which the stainless-steel

mating surface is to be welded to the sole plate and the 1-in. wide strips where the sole plate is to be welded to the flange.

The surface preparation shall be accomplished in accordance with the requirements of the SSPC SP1 for Solvent Cleaning and SP10 for Near White Blast Cleaning. The surface preparation shall result in a 50 to 100 μm (2 to 4 mils) blast profile as determined by the Engineer. The average surface profile produced by the contractor's surface preparation procedures will be determined at the beginning of the work and as required by the Engineer using a profile depth tape and micrometer. Profile depth tape measurements shall be retained and submitted for the Engineer's approval. Single measurements less than 50 μm (2 mils), or greater than the specified maximum for the metallizing system used will be considered unacceptable. Areas having unacceptable measurements will be further tested to determine the limits of the deficient area. If unacceptable profiles are provided, work will be suspended. The Contractor shall submit a plan for the necessary adjustments to ensure the correct surface profile on all surfaces. The contractor shall not resume work until authorized by the Engineer.

The abrasives used shall be hard and sharp in order to produce an angular surface profile. Acceptable abrasives include but are not limited to, angular aluminum oxide, angular steel grit and angular crushed slag. Silica sand shall not be used. Steel shot and other abrasives producing a rounded surface profile are not acceptable. However, the steel can be preblasted with shot provided that the entire surface is reblasted with angular abrasives. All metallizing shall occur within 4 hours of completion of blast cleaning.

The thickness of the metallizing shall be 200 to 250 μm (8 to 10 mils), measured as specified by SSPCPA2. All metallizing work shall be performed by a company with at least five years of experience in the field of metallizing structural steel.

The spray requirements shall be according to the SSPC CS-Guide 23.00 "Guide for Thermal Spray Coatings (Metallizing) of Aluminum, Zinc, and Their Alloys and Composites for the Corrosion Protection of Steel" and the ANSI/AWS C2.18 "Guide for the Protection of Steel with Thermal Sprayed Coatings of Aluminum and Zinc and their Alloys and Composites."

To produce the required thickness and uniformity, a minimum of two passes are required, overlapping and at right angles to each other. The gun shall be held at such a distance from the work surfaces that the metal is still plastic on impact, 5 to 9 in. The coating shall be firmly adherent and free from uncoated spots, lumps, or blisters, and have a fine sprayed texture.

The Contactor is required to provide facilities to protect the finished metallized surface from damage during the blasting and thermal spraying work operations on adjacent areas. All damaged areas shall be properly repaired and remetallized by the contractor. Surfaces not intended to be metallized shall be suitably protected from the effects of cleaning and metallizing operations. To the maximum extent practicable, metallizing shall be applied as a continuous film or uniform thickness free of pores. All thin spots or areas missed in the application shall be remetallized.

After field welding the sole plate to the flange the weld shall be cleaned and painted with a high zinc content paint in accordance with 960.64: Galvanizing.

960.66: Stud Shear Connectors

General.

Welding of stud shear connectors shall conform to the latest edition of the AASHTO/AWS Bridge Welding Code.

All stud shear connectors applied to flanges of beams or girders shall be field installed.

Workmanship.

At the time of welding, the studs shall be free from any rust pits, scale, oil or other deleterious material that would adversely affect the welding. The area of the beams or girders to which the studs are welded shall be free of rust and scale.

The arc ferrules shall be kept dry. Any ferrules that show signs of moisture shall be oven dried at 250°F for two hours before use.

After welding, the studs shall be free of any discontinuities that would interfere with their intended function.

Longitudinal and lateral spacing of studs with respect to each other and to edges of beam or girder flanges may vary a maximum of 1 in. from the location shown on the drawings. The clear distance between studs shall not be less than 4 diameters center to center. The minimum distance from the edge of a stud base to the edge of a flange shall be the diameter of the stud plus ⅛ in., but preferably not less than 1.5 in.

Preproduction Testing.

Before production welding begins and at the beginning of each shift thereafter, testing shall be performed on the first two studs that are welded for each particular set-up, size and type of stud. All test studs shall be welded in the same position as required in production.

The test studs shall be visually examined and shall exhibit a full 360-degree flash.

The test welds shall also be mechanically tested by bending the studs approximately 30 degrees. The weld or stud shall not fail.

If either of the above tests fail, two more studs shall be welded to separate material and tested again.

Technique.

Stud shear connectors shall be welded to steel beams or girders with automatically timed stud welding equipment connected to a suitable power source of direct current electrode negative (DCEN) power. If two or more stud welding guns are to be operated from the same power source, they shall be interlocked so that only one gun can operate at a time and so that the power source has fully recovered from making one weld before another weld is started. The power source shall be adequate to meet the requirements of the size of stud being welded.

While in operation the welding gun shall be held in position without movement until the weld metal has solidified.

When the temperature of the base metal is below 32°F, one stud in each 100 studs welded shall be bent 15° in addition to the first two bent. Welding shall not be done when the base metal temperature is below 0°F.

Operator Qualification.

The equipment operator is qualified by passing the preproduction test.

Production Welding.

Studs on which a full 360° weld is not obtained may be repaired, at the option of the contractor, by adding the minimum size fillet weld in place of the missing flash. The repair shall extend at least ⅜ in. beyond each end of the discontinuity being repaired.

Removal of unacceptable studs in tension areas:

1. Base metal from which an unacceptable weld is removed shall be ground smooth.
2. If the base metal has been pulled out during removal of the stud, the area shall be repaired using an approved SMAW welding procedure and ground smooth.

Removal of unacceptable studs in compression areas:

1. If the failure is in the shank or weld fusion zone, a new stud may be welded adjacent to it in lieu of repair or replacement.
2. If the base metal is pulled out, the repair is the same for tension areas except that if the depth of the discontinuity is less than $^{1}/_{16}$ in., the discontinuity may be faired by grinding.

Base metal shall be preheated to: 50°F for base metal thickness up to and including ¾ in.; 70°F for base metal thickness up to and including 1.5 in.; 150°F for base metal thickness up to and including 2.5 in.

If the reduction in the height of the studs as they are welded becomes less than normal, welding shall be stopped immediately and not resumed until the cause has been corrected.

Inspection.

If visual inspection reveals any stud which does not show a full 360° flash or which has been repaired by welding, such stud shall be bent 15° off the vertical. For studs showing less than a 360° flash, the direction of bending shall be opposite to the lack of weld. Studs that crack either in the weld or shank shall be replaced.

Studs that are tested and show no sign of damage may be left in the bent position.

The Engineer, at their option, may select additional studs to be subject to the bend test specified above.

If during the progress of work, inspection and testing indicate, in the judgment of the Engineer, that the stud shear connectors are not satisfactory, the Contractor will be required at their expense to make such changes in the welding procedure, welding equipment and type of stud as necessary to secure satisfactory results.

COMPENSATION

960.80: Method of Measurement

Payment will be based only on computed weights (masses) of steel complete in place in the structure. No additional allowance in mass will be made for the shop coat of paint or for any other coat of paint or other protective covering.

The weight of the rolled shapes and of the plates, regardless of the width of the plates, shall be computed on the basis of their nominal mass and of their dimensions as shown on the approved shop drawings, deducting for copes and cuts, and for all open holes that are not to be filled with rivets, bolts or plug welded.

Steel for expansion assemblies at the roadway level of bridges and similar structures (whether or not attached to the structural steel of the deck) and bronze or other metal for expansion bearings, drainage troughs and baffles, shall be included in the mass to be paid for as structural steel. Where no separate items are in the contract for galvanized nose angles on piers, or curb plates or angles in bridge curbs, such steel will be paid for by the pound as structural steel, with no additional compensation for the galvanizing.

The computed weights shall not include the weight of welds. The density of the various metals shall be assumed as follows:

Steel (Structural, Cast, Galvanized) ..... 490 pcf
Cast Iron ..... 450 pcf
Bronze ..... 542 pcf

The weight of the nuts and heads of bolts shall be included in the computed weight, assuming the weight to be as shown in Table 960.80-1.

Payment for bolt heads and nuts will be made by the pound. Where rivets are used in the permanent construction, the heads of the rivets shall be considered, for purpose of payment, as bolt heads for bolts equal in diameter to the rivets, regardless of the material of which they are composed or the materials to which they fasten.

All permanent washers will be paid for by the pound. The shank of a bolt will be considered as part of the material through which it passes and will be paid for as that material. No allowance or payment will be made for that part of a bolt shank that extends through and past the nut.

Table 960.80-1: Assumed Weight of Nuts and Heads of Bolts

Diameter of Bolt (in.)	Weight per 100 Bolts (Heads & Nuts) (lb)
½	4
⅝	7
¾	12
⅞	18
1	26
1 ⅛	36
1 ¼	48

960.81: Basis of Payment

The furnishing, fabricating, erecting and coating of all structural steel and all metal work for the structure not otherwise provided for, will be paid for at the contract unit price per pound under the item for structural Steel, complete in place.

To avoid delay in computation of the weight for partial and final payment, the Contractor shall submit their computations for the steel shown on each of the approved shop drawings as soon as practicable after the sheet has been approved. The computation by the Contractor shall show the weight for each member, except that duplicate members may be grouped together.

960.82: Payment Items

960.	Structural Steel	Pound
960.1	Structural Steel – Coated Steel	Pound
960.11	Structural Steel – Uncoated	Pound
960.12	Structural Steel - M270 Grade 70HPS & 50HPS	Pound
999.960	Structural Steel on Hand	Pound

[1]Not a bid item.

SUBSECTION 961: MAINTENANCE PAINTING OF STEEL BRIDGES

DESCRIPTION

961.20: General

This work consists of the surface preparation and painting of all steel, including but not limited to, the beams (girders), bearings, diaphragms, cross frames, hand railings, drainage systems, utility supports and lamp posts. The work also includes environmental protection and waste disposal.

The Contractor shall implement and maintain programs and procedures that comply with the requirements of this specification and all applicable standards and regulations. The Contractor shall comply with all applicable regulations even if the regulation is not specifically referenced herein. If a Federal, State or local regulation is more restrictive than the regulation of this specification, follow the more restrictive requirements.

Work shall also consist of the removal of all graffiti from concrete surfaces and the removal and disposal of debris on abutments and pier caps.

The Contractor shall provide the Engineer safe access and support to all parts of the structure for interim and final inspection of the bridge during cleaning and painting operations. This support shall include the necessary traffic controls, scaffolding, fall protection and lighting.

All Contractors and Subcontractors performing lead-based paint removal, containment and collection, surface preparation, and coating of structural steel must be prequalified by the Department in the Painting (Structural) category.

MATERIALS

961.40: Materials

Coatings systems shall conform to the requirements of M7.02: Structural Paint.

961.41: Inspection Equipment

Prior to the start of any cleaning or painting operations, the contractor shall furnish the following inspection equipment to the Engineer:

4 Wet Film Thickness Gauges (notch type, as specified in ASTM D4414, procedure A)
1 Dry Film Thickness Gauge - type two, with memory and download capabilities (Posi-Tector 6000, Elecometer 345, Quanix or approved equal)
1 Sling Psychrometer with two replacement thermometers (Bacharach, Taylor, Ertco or approved equal)
1 National Weather Bureau psychrometric tables
1 Magnetic Surface Temperature Thermometer, calibrated/certified, range 0°F to 150°F
1 Spring loaded micrometer for reading surface profile tape
* Course and x-course profile replica tape
1 Surface Profile Comparator, comprised of, 10x flash light magnifier and 1 grit/slag disc or coupon, Keane-Tator, Elcometer, Clemtex or approved equal.
* Quantitative soluble contaminates test kit (Bresle, Chlor*Test, or approved equal)
1 Inspection mirror, telescopic with a mirror surface of 10 in.^{2}
* Blotter Paper for compressed air testing
9V lantern
1 High/Low Recording Thermometer (for paint storage area)
Incline Manometer
Velometer
1 Light Meter
1 SSPC VIS 1 Standards
1 SSPC VIS 3 Standards

* A quantity sufficient for required testing.

All equipment shall be in usable condition and complete with all necessary components and instructions for the proper calibration and function. Equipment found to be incomplete or unable to be field calibrated, shall be immediately replaced. All equipment shall remain the property of the Contractor upon completion of the project.

CONSTRUCTION METHODS

961.60: Surface Precleaning

Pressure washing is required for all surfaces of the structure that are to be painted. Prior to pressure washing, the Contractor shall remove all accumulated debris from abutments, pier caps, girder flanges and other areas of collection. Debris may include but are not limited to, sand, gravel, bituminous materials and bird droppings. The method of removal shall allow for the collection and proper disposal of the debris.

All water used for pressure washing shall be potable and supplied by the Contractor.

Water from pressure washing operations shall be collected, filtered, and tested for toxic metals.

Pressure washing shall not be performed more than seven days prior to the start of surface preparation. Prior to the start of surface preparation, the Engineer will inspect the cleaned surface to ensure that it is acceptable. The Contractor shall reclean unacceptable surfaces in the specified manner.

Portable pressure washing equipment shall be operated at a minimum of 3,000 psi, a water temperature of 200°F and a minimum consumption of 6 gallons per minute shall be used to clean all surfaces to be painted of visible and non-visible contaminants. Pressure washers shall be equipped with gauges to ascertain operating pressure and temperature. The use of an oscillating or rotary type nozzle is recommended for all washing.

The Contractor shall use a water-based, phosphate free, biodegradable cleaner, which has a pH of 9 to 11. The cleaner shall also be, non-flammable and non-reactive. RMS shall approve all cleaning solutions. Each pressure washing unit shall have a cleaning compound supply tank with the ability to control the amount of solution being supplied to the feed water. Cleaning solutions shall be used in strict accordance with the manufacturer's written recommendations.

All dirt, oil, grease, tar, road salt, bird dropping residue, chalky paint and other dissolvable debris and contaminates shall be removed by pressure washing. Excessive deposits of cleaning liquids remaining on surfaces that will not drain shall be flushed off with clean, fresh water without detergent. In as much as a certain amount of liquid will remain on horizontal surfaces after cleaning, the cleaning process shall be followed through systematically from top to bottom. The last pass on any surface shall be made with clean fresh water without detergent to remove surplus solution.

The Contractor shall be solely responsible for damages arising from pressure washing operations. Expansion joints or open areas that will allow debris or water to pass shall be covered or sealed to protect vehicle and/or pedestrian traffic.

Under no circumstances will surface preparation or painting be started over cleaned surfaces until the surface is free of standing water and dry to the touch, and then only after the approval of the Engineer.

961.61: Surface Preparation

All equipment, materials and vehicles brought to the site by the Contractor shall be clean and free of debris. A visual assessment of cleanliness shall be made by the Engineer prior to locating equipment at the contract location(s).

All portions of the structure that could be damaged by surface preparation, abrasive residue, and painting operations, (e.g., utilities, bearings, machined surfaces, electric motors, wiring, and neoprene pads) shall be protected prior to the start of cleaning and painting operations. Any damage or reduced service life caused by the failure to protect areas or components of the structure shall be repaired or replaced at the Contractor expense.

The Contractor shall immediately report to the Engineer any cracks, section loss or other potential problems found during surface preparation.

After surface preparation all surface imperfections/discontinuities (e.g., sharp fins, sharp edges, weld spatter, burning slag, scabs. slivers, laminations, etc.) that remain shall be completely removed by grinding to the satisfaction of the Engineer. The Contractor shall restore surface profile if degraded by grinding.

Alternate methods of surface preparation that will provide the specified surface cleanliness and profile may be submitted to the Engineer for review for approval.

Prior to full operation of surface preparation, an acceptance standard for the preparation method(s) shall be prepared by the Contractor and approved by the Engineer. The surface for the standard (or control) should be a flat portion of the surface actually to be cleaned and shall be located by the Engineer. The Engineer shall be the final authority in regard to determining whether or not a prepared surface meets the requirements of this specification.

To establish this standard, SSPC VIS-1 and VIS-3, shall be used as guides. An area not less than 2 ft x 2 ft shall be prepared to meet the requirements of the surface preparation method(s) to be utilized. After approval and at the option of the Engineer, the prepared standard will be sealed with a clear protective paint to preserve its appearance. Upon completion of the surface preparation and application of the primer, the standard will be re-prepared and coated in accordance with these specifications.

All laminar and stratified rust that has formed on the existing steel surfaces shall be removed. Pack rust formed along the perimeter of mating surfaces of connected plates or shapes of structural steel shall be removed to the extent feasible without mechanically detaching the mating surface. Extensive pack rust, buckled plates, and loose or missing bolts shall be brought to the attention of the Engineer before painting. Any pack rust remaining shall be tight and intact when examined after scraping with a dull putty knife.

A best effort with the specified methods of cleaning shall be performed in limited access areas. The equipment being used for the majority of the cleaning may need to be supplemented with other commercially available equipment, such as angle nozzles, to properly clean the limited access areas. The acceptability of the best effort cleaning in these areas is at the sole discretion of the Engineer.

961.62: Surface Cleaning Requirements for Overcoating

All steel except as defined under section entitled “Cleaning of the Bearing Areas” shall be spot cleaned SSPC SP-3 Power Tool Cleaning or SSPC SP-14 Industrial Blast Cleaning, the method of surface preparation shall be chosen by the Contractor. Regardless of the method used for cleaning, remaining old paint shall be feather edged so that the repainted surface will have a reasonably smooth appearance.

All steel within the width of the pier caps and abutments and a length from the end of the stringer to a distance 5 ft beyond the centerline of the bearing (from the top of the pier caps and abutments to the bottom of the bridge deck) shall be abrasive blast cleaned to meet the requirements of SSPC SP-10 “Near White Metal Blast.” This requirement is waived at bearing areas located at intermediate piers where there are no deck joints directly above.

961.63: Surface Cleaning Requirements for Full Removal

All surfaces to be painted shall be abrasive blast cleaned to meet the requirements of SSPC SP-10 "Near White Metal Blast" using recyclable steel abrasives.

A. Surface Profile.

Abrasive blast cleaned surfaces shall have a uniform profile of 25.4 to 76.2μm (1 to 3 mils). Verification of the profile height will be performed in accordance with ASTM D4417 Method C. If surface profile requirements of the coating manufacturer differ from those specified, the Contractor shall comply with the coating manufacturers requirements. Profile replica tape shall be filed with the project inspection records. The profile shall be measured three times in random locations at least every 500 ft^2 of prepared surface or as directed by the Engineer. The measured profile shall be approved by the Engineer.

B. Abrasives.

All abrasives brought to the site shall be stored in a clean and dry environment. The Contractor shall select the type of abrasive. Expendable abrasives shall be in accordance with SSPC AB-1, class "A." Recycled steel grit shall be in accordance with SSPC AB-2, and recyclable steel abrasives shall be in accordance with SSPC AB-3.

The selected abrasive shall be sufficient to produce a profile within the range specified. The profile shall be uniform and of sufficient angularity as to be acceptable by the paint manufacturer for the application of primer. The Engineer with the use of a surface profile comparator will randomly inspect angularity of the profile.

All abrasives will be maintained clean, dry and uncontaminated. The abrasive shall be tested daily for grease, oil or non-abrasive residue with a "vial test" using the following method:

A sealable jar is filled with distilled water, a sample of abrasive taken from the storage hopper or pressure vessel and is then added to the jar. The vial is shaken for one minute and allowed to set for five minutes. The vial is observed. If any oil or grease is floating on the top of the water or a cloudy condition exists, the abrasive will be considered contaminated.

Contaminated abrasives will not be used for surface preparation. Abrasive found to be contaminated shall be disposed of or recycled.

The use of proprietary additives to water or abrasive to generate a non-hazardous waste is not permitted.

C. Compressed Air.

All compressed air sources shall have properly sized and operational oil and moisture separators. Prior to the connection of the air to the blast pot(s), a desiccant filter drying unit or air dryer shall be installed. They shall allow air at the nozzle for blast cleaning, painting, or blow off to be oil free and moisture free. Compressed air shall have sufficient volume and pressure to accomplish the associated work effectively and efficiently.

A blotter test will be performed at the start of each day or shift by the Engineer to ensure that compressed air is free of oil and moisture. The Contractor shall supply all blotter paper. The

compressed air will be tested for contaminants in accordance with ASTM D4285 "Detecting Oil or Water in Compressed Air."

D. Substrate Cleanliness.

Upon completion of blast cleaning and prior to inspection, the Contractor shall vacuum and/or blow down under full ventilation and containment all surfaces to be inspected, providing areas for testing and to aid visual inspection of the substrate.

The prepared surface will be tested by the Engineer for chloride contamination using the required test kit and the manufacturer's instructions for extracting and quantifying chloride levels. All test areas will be recorded for re-testing purposes.

A minimum of 5 tests per 1,000 ft^2 or fraction thereof completed in a given day shall be conducted at project start up. If results greater than 7 $\mu g/cm^2$ are detected, the surface shall be recleaned as specified and retested at the same frequency. If acceptable results are achieved on three consecutive days in which testing is conducted, the test frequency may be reduced to one test per 1,000 ft^2 providing the preparation method remains unchanged. If unacceptable results are encountered, or the methods of preparation are changed, testing shall resume at a frequency of 5 tests per 1,000 ft^2. After testing and approval, the test areas shall be blast cleaned to the specified level of cleanliness and profile.

961.64: Paint

Paints and solvents are hazardous due to their flammability and potential toxicity. Proper safety precautions shall be observed to protect against these recognized hazards. Proper ventilation and handling shall be employed during mixing and application to insure that vapor concentrations do not exceed the published Permissible Exposure Limits (P.E.L.) and the Lower Explosion Limit (L.E.L.).

Prior to the application of any coating, all dust and debris shall be removed by vacuuming and/or blowing down under full ventilation and containment. Painting of the approved area will not be allowed until the area has been properly ventilated to remove all airborne dust.

Surface preparation and subsequent paint application shall be so programmed that dust and other contaminants from the cleaning process will not fall on surfaces about to receive paint, or on wet, newly painted surfaces.

Approved surfaces will not be allowed to stand uncoated longer than eight hours unless some form of protective environmental procedure is utilized, e.g., dehumidification. If substrate is found to have degraded, it will be recleaned in the specified method at the Contractors expense.

All surface preparation will be reviewed and approved by the Engineer prior to painting operations.

The finish coat shall be Federal Standard Color #14223, green.

The colors of the prime, intermediate and finish coats shall have a definite color contrast between them and be subject to the approval of the Engineer.

Minimum and maximum dry film thickness shall be in accordance with the latest manufacturer's data sheet for each product applied.

A. Storage, Testing and Sampling.

The Contractor shall provide a suitable facility for the storage of paint that will be in accordance with the latest requirements of OSHA. This facility must provide protection from the elements and insure that the paint is not subjected to temperatures outside the manufacturer's recommended extremes. Storage of the paint must be located in reasonable proximity to the painting location. The Contractor's facility for the storage of paint and its location at the site are subject to the approval of the Engineer.

Before the Contractor will be permitted to use any paint, the material provided for application shall have been sampled, tested and approved in accordance with Section M7: Paints, Protective Coatings. RMS requires a minimum of 14 days after the receipt of samples to test and approve.

B. Mixing and Thinning.

Before the paint is applied, each component shall be mechanically mixed to ensure complete disbursement of the pigment. Mixing of components shall be accomplished by mechanical mixing or agitation, boxing or hand mixing of components will not be allowed. Any special precautions or requirements for mixing by the manufacturer shall be followed. Paint shall be kept thoroughly mixed in spray pots or containers during application. The pot life shall not be exceeded, or attempts made to extend pot life with the addition of solvent.

If it is necessary for any reason to thin paint it will be done in the presence of the Engineer, in accordance with the manufacturer's recommendations. Thinning must be performed using a measuring cup marked in ounces or milliliters. Other methods, such as eyeballing, are not acceptable. Thinner shall be supplied from the same manufacturer as the paint system.

For multi-component paints, the mixing of half or partial kits is not allowed. If the need for small quantities of paint is anticipated, the contractor should order materials accordingly.

C. Application.

All necessary precautions shall be taken to protect pedestrians, vehicles, concrete areas, and any other areas not to be painted. All paint overspray, mist and or dust shall be collected and filtered with collection equipment.

Prior to the application of any coating material, the Engineer's approval must be obtained. All surfaces painted prior to the Engineer's approval, shall require the complete removal of the coating applied. All labor, materials, and associated costs with the removal of any unapproved coating shall be done at the Contractor's expense to the satisfaction of the Engineer in accordance with these specifications.

Applied coatings shall not exhibit, runs, sags, holidays, wrinkling, pinholes, nap hair, topcoat gloss or color variations, or other film discontinuities.

Repair of unacceptable areas that involve removal of the coating system or part of it, shall require surface preparation and coating equal to that specified. Repair procedures used for any unacceptable coating shall be those supplied by the paint manufacturer and approved by the Engineer.

Application of full coats of paint shall be accomplished by spray equipment. Spray equipment shall meet the requirements of the coating manufacturer and be in proper working order.

Application by brush and roller will be limited to stripe coating, inaccessible areas and the application of the spot coat of primer. Brushes and roller covers recommended by the coating manufacturer shall be used. Areas brushed and rolled will have a uniform thickness and be free of defects and excessive coating thickness.

All coating shall be applied according to the latest manufactures written requirements. The maximum re-coat times of the primer, intermediate and finish coats shall not be exceeded.

Application of organic zinc, epoxy, and urethane systems shall not be done when the relative humidity is above 85% or when the surface temperature of the steel is less than 5°F above the Dew Point. Paint shall not be applied when the surface temperature is below 40°F or when the surface temperature is above 125°F.

Application of moisture cure urethane systems shall not be done when the relative humidity is above 95% or when the surface temperature of the steel is less than 3°F above the Dew Point and rising. Paint shall not be applied when the surface temperature is below 35°F or when the surface temperature is above 125°F.

If requested by the Engineer, the Contractor shall provide written instructions from the coating manufacturer indicating the length of time that each coat must be protected from cold or inclement weather (e.g., exposure to rain) during its curing or drying period.

Paint shall not be applied when, in the Engineer's judgment, conditions are or will become unsatisfactory for application and proper cure. All changes as to the application parameters other than specified must be the manufacturer's and presented in writing and approved by the Engineer. Ambient conditions should be closely monitored so that proper cure/drying is achieved prior to recoat. In no case shall a succeeding coat of paint be applied before the previous coat has cured/dried sufficiently for recoat as per manufactured data sheet.

If required, contaminated surfaces, e.g., bird droppings, road debris shall be cleaned in accordance with SSPC- SP 1 Solvent Cleaning method 4.1.1.

Measurement of the ambient conditions shall be done in accordance with ASTM E337 Test Method for "Measuring Humidity with a Psychrometer" (the Measurement of Wet and Dry bulb Temperatures).

After Full Removal

The primer will be applied at a coverage rate that will result in a minimum dry film thickness recommended by the manufacturer, when measured in accordance with SSPC PA-2.

The primer shall not be cleaned of over spray or debris by wire brushing or methods that would burnish the surface.

When the primer has cured sufficiently for recoat, all bridge components to be painted shall receive a full intermediate coat.

To provide adequate film thickness in areas or places prone to breakdown, edges, corners, rivet heads, bolts, nuts, and welds shall be striped by brush painting. Stripe coating of the intermediate coat shall be completed prior to the application of the full intermediate coat.

Prior to the application of the finish coat, bearing areas as defined shall receive an additional intermediate coat at 3 mils Dry Film Thickness (DFT), spray applied. The additional coating will be applied from the end of the beam to a distance of 5 ft including all steel between the abutment cap and the bottom of the bridge deck and including end diaphragms.

All steel within the width and length of the intermediate pier(s) from the center of the pier to a distance of 5 ft in each direction on the stringers including all steel between the pier cap and the bottom of the bridge deck shall also receive additional second spray applied intermediate coating at 3 mils DFT, with the exception of the intermediate piers where there are no deck joints directly above.

When the intermediate coat has cured sufficiently for recoat, all bridge components to be painted shall receive the finish coat by spray application.

All prepared surfaces shall receive three full coats of paint (primer, intermediate, finish) and the additional (bearing area) intermediate coat of a system selected from the NEPCOAT "B" list, Protective Coatings for New and 100% Bare Existing Steel for Bridges.

All areas prepared by spot cleaning shall be spot primed with the selected systems primer. Spot priming shall be completed by brush and roller to provide complete coverage of irregular or pitted surfaces.

Areas spot cleaned in accordance with 961.62: Surface Cleaning Requirements for Overcoating shall be painted with an approved 2 or 3 coat NEPCOAT system selected from the "M" list, Protective Coatings for Previously Painted Existing Steel Bridges.

Overcoat - Two Coat Systems

When the primer has cured sufficiently for recoat, all bridge components to be painted shall receive a full finish coat by spray application.

Overcoat - Three Coat Systems

When the primer has cured sufficiently for recoat, all bridge components to be painted shall receive a full intermediate coat by spray application and when sufficiently cured a full finish coat by spray application.

Bearing areas cleaned in accordance with 961.62: Surface Cleaning Requirements for Overcoating, Part A., Cleaning of the Bearing Areas shall receive three full coats of paint. Application shall be in accordance with the Full Removal portion of this section. The coating system shall be selected from the NEPCOAT "B" list, Protective Coatings for New and 100% Bare Existing Steel for Bridges. Interface between different paint systems shall be vertically masked during the final coat to provide a neat edge on the fascia girders.

D. Measurement of Paint Thickness.

The Engineer will measure wet and dry film thickness with the following methods and standards.

Wet Film Thickness: Will be measured during application with a notch type wet film thickness gauge every 50 ft^2, in accordance with, ASTM D4414 Standard Practice for Measurement- Wet Film Thickness by V Notch Gages, procedure A.

Dry Film Thickness: Will be measured using a type II gauge. The prime, intermediate and the finish coats, shall be measured in accordance with SSPC PA-2, Measurement of Dry Coating Thickness with Magnetic Gages. The Engineer has the option to measure the dry film thickness of overcoated surfaces with the use of a Tooke gage or similar type instrument. Repair to areas cut to determine the DFT of new coatings will be done at the Contractor's expense.

E. Bridge Identification Markings.

After the application of the finish coat of paint, the Contractor shall stencil the 3-character BIN, completion date (month and year), and the letter "F" to designate full clean and paint or "O" to designate clean and paint (overcoat). The information shall be applied on the steel in black on a white base measuring 30 in. by 5 in., square, utilizing 2-in. numbers, when and as directed by the Engineer.

961.65: Worker Protection

The DEP and EPA regulate coatings containing toxic metals and the residue generated from the removal process as a hazardous waste. The Contractor shall comply with all Federal, State and municipal laws, regulations and ordinances that require the Contractor to provide for a safe and healthful work area for work to be performed by the Contractor under this Contract.

The Massachusetts Department of Labor and Workforce Development, Division of Occupational Safety, and the Federal Occupational Safety and Health Administration (OSHA) regulate the exposure to paint and debris containing toxic metals by workers involved in the removal of bridge coatings. Coatings removed from highway structures that contain toxic metals, has been shown to have serious health effects on workers if regulations and caution are not observed.

The existing structure(s) and components may be coated with a lead-based paint. Therefore, the Contractor shall be required to sample the existing coatings to determine the percent of lead and if other toxic metals are present. Within 30 days of the notice to proceed the Contractor shall submit a sampling protocol to the Engineer for approval. Upon approval of the protocol the Contractor shall sample and have analyzed in accordance with 310 CMR 30.155B (EPA SW846 Method 1311) the existing coatings.

The results of the testing shall be utilized in the development of the "Compliance Program" to protect workers from lead and toxic metals as required by Federal and State regulations. The remaining portion of this specification focuses on lead but requires the Contractor and the Certified Industrial Hygienist (CIH) to address other toxic metals.

The Contractor shall provide the Massachusetts Department of Labor and Workforce Development's, Division of Occupational Safety, a written notification of the project. The notification shall be received at least ten days prior to the beginning of any contract operations and include: its location, start date and anticipated completion date. The Contractor shall also comply with all registration, license, and permit requirements.

Equipment noise in excess of 90 decibels or other local ordinances as measured at the closest residential, commercial or recreational area, shall be lowered by the contractor to a maximum of 90 decibels or other local ordinances. The use of sound barriers, mufflers or other equipment and materials used to lower noise levels shall be approved by the Engineer prior to installation and provided and installed at no additional cost to MassDOT.

A. Compliance Program.

The Contractor shall develop a written program under the direction and approval of a Certified Industrial Hygienist (CIH) to establish and implement practices and procedures for protecting the health of those employees exposed to lead. The Compliance Program shall establish methods for complying with any Federal, State or local regulations.

B. Services for MassDOT Representatives

The Contractor shall provide to not more than three representatives of the MassDOT, all the work place and worker protection requirements that the Contractor is required by law and regulations to provide to their own employees in order to maintain a safe and healthful work place.

Without limiting the Contractor's responsibilities under the prior paragraph, the Contractor shall provide to not less than three representatives of the MassDOT Department the following services:

1. Training: an initial and annual refresher training as required by the appropriate OSHA standards; Hazard Communication training (29 CFR 1926.59), including proper handling and disposal of hazardous waste.
2. Blood Tests: initial and periodic blood and zinc protoporphyrin (ZPP) sampling and analysis, and medical surveillance as required by OSHA health and safety standards for lead; verify that laboratories that conduct blood analysis meet the qualification requirements established by OSHA; conduct blood sampling and analysis within one month prior to the start of work and at a minimum of once every 2 months for the first 6 months of exposure, and a 6 months intervals thereafter; conduct blood tests within 5 days of separation and upon completion of the person's project activities that involve exposure to lead, even if this occurs prior to the completion of the Contractor's work on the project; supply the Massachusetts Blood Lead Registry (MBLR) and Engineer with the results of all blood tests prior to commencement of work; subsequent blood lead test results shall be supplied to MBLR and the Engineer within ten days of receipt; only certified laboratory copies of test results from OSHA-CDC approved laboratories may be submitted to MassDOT and the Department of Labor and Industries, Division of Occupational Hygiene, with more frequent testing to be done as required, in accordance with this specification and 29 CFR 1926.62; evaluate effectiveness of protection practices whenever a 10 μg/dl blood lead level increases between two results, or a single result in excess of 20 μg/dl.
3. Physical Exams: provide all physical examinations as required by the appropriate OSHA standard for lead.
4. Respirators and Protective Clothes: provide respirators to those who enter areas where airborne exposures exceed or are expected to exceed the Permissible Exposure Limit (PEL) or Threshold Limit Value (TVL); provide protective clothing and equipment to those whose exposure exceed the PEL or TLV.

5. Lavatory and Hand Washing Facility: provide clean lavatory and hand washing facilities in accordance with OSHA sanitation standard 29 CFR 1926.51 and provide showers when the exposure limit exceed the PEL or TLV.

C. Signs and Daily Logbook.

Signs warning that lead paint removal operations are being conducted shall be posted at all approaches to the work areas and in areas where workers will be exposed to concentrations above the PEL. At a minimum, such signs shall include the words:

WARNING
LEAD WORK AREA
POISON
NO EATING OR SMOKING
AUTHORIZED PERSONNEL ONLY,
RESPIRATORS REQUIRED IN THIS AREA

The lettering shall be black block, no smaller than 3 in. tall, and on a white, yellow, or orange background. Caution ribbons shall also be used where appropriate.

A daily sign in/out log which identifies persons by name, address, and affiliation, or work classification for all employees with the project, and the times of arrival and departure must be maintained at the work site, and submitted to the Engineer on a weekly basis when lead paint removal operations are being performed.

961.66: Environmental Protection and Monitoring

The Contractor shall comply with all Federal, State and municipal laws, regulations and ordinances that require protection of the environment, including laws and regulations whose purpose is to prevent contamination and pollution of the air, water and soil in and surrounding the work site, where lead paint being removed from a bridge under this contract is subject to abatement, containment, transportation and disposal.

A. Air Quality.

Baseline Monitoring

Pre-project monitoring shall be performed for a minimum of two days while no paint removal work is underway in order to establish baseline levels. Emissions from the project site will not be penalized by existing baseline levels. If the baseline levels are highly variable, the Engineer may require that periodic or full-time upwind monitoring be conducted. Include provisions for such monitoring in 961.69: Submittals, Paragraph B.

High Volume Ambient Air Monitoring

High volume ambient air monitoring shall be conducted in strict accordance with the requirements of 40 CFR 50, 310 CMR 7.00, and the equipment manufacturer's instructions.

The Contractor shall submit methods and procedures for locating the monitors, calibrating and conducting baseline and project monitoring, and completion of chain of custody forms. Include the name and qualifications of the State-certified laboratory proposed for use, and the test methods that will be utilized for the analysis of the filters.

Conduct the following monitoring activities under the observation of the Engineer: locating and calibration of the monitors, daily removal and replacement of the filters, and completion of the chain of custody forms.

TSP Lead Monitoring

The monitoring shall be in accordance with 40 CFR 50 for 5 out of the first 10 days at the beginning of each project location while paint removal, containment movement, and cleanup activities are underway. Monitoring during paint application is not required, and if performed, will not be counted as one of the 5 days of project monitoring.

The monitors shall be placed at the point of maximum environmental impact (usually downwind of the cleaning operation) and other locations of potential public or environmental exposure. Monitors shall be moved to maintain this condition due to shifting wind patterns.

For TSP-lead monitoring, emissions in excess of the value attained by the following formula or exceeding 150% of background levels shall be cause to shut down the project until the work activities and/or containment are modified to provide better control of emissions.

$$DA = (90 \div PD) \times 1.5\ \mu g/m^3$$

Where: $DA = the\ Daily\ Allowance\ in\ \mu g/m^3$
$PD = the\ number\ of\ preparation\ or\ paint\ disturbance\ days\ anticipated\ in\ a\ 90\ day\ period$

The above calculation provides an allowance criteria for a 24-hour period. In order to convert this value to an allowance corresponding to the hours worked, do the following:

$$ADA = DA \times (24 \div H)$$

Where: $ADA = the\ Adjusted\ Daily\ Allowance\ in\ \mu g/m^3$
$DA = the\ daily\ allowance\ in\ \mu g/m^3$
$H = the\ hours\ work\ in\ 24\ hours$

If the emissions are unacceptable at the end of the 5 days of monitoring, or a trend of exceedances is apparent from the 5 days of monitoring, the monitoring shall continue at the contractor's expense until 5 days of acceptable monitoring limits have been obtained.

After the initial 5 days of monitoring, if visible emissions are in excess of the stated duration for 2 days, additional monitoring shall be required for a period of 2 consecutive days of TSP monitoring. If the emissions are unacceptable after the 2 days of monitoring, the monitoring shall continue at the contractor's expense until 2 days of acceptable monitoring limits have been obtained.

The Contractor shall conduct additional ambient air monitoring after periods of prolonged shutdown or following any significant changes in work practices.

Laboratory Analysis and Report

The Contractor shall have all filters analyzed for lead using a State-certified laboratory. The analysis shall be conducted in accordance with 40 CFR 50. The Contractor shall provide the Engineer with verbal results of the laboratory analysis within 72 hours after the monitoring was performed, with a written summary report within seven days.

Visible Emissions

The Contractor shall conduct visible emissions assessments in accordance with 40 CFR 60, Appendix A, Method 22. This assessment is based on total visible emissions regardless of the opacity of the emission.

Visible emissions are permitted at the following duration provided they do not extend beyond the established regulated areas. Random airborne emissions of a cumulative duration of no more than 1% of the workday are permitted. This amounts to a duration of 5 minutes in an 8-hour workday. Visible emissions in excess of this criterion are cause for immediate project shut down until the cause of the emissions is corrected.

The visible emissions assessment will account for all locations where emissions of lead dust might be generated, including but not limited to, the containment or work area, dust collection and waste recovery equipment as applicable and waste containerizing areas. Observations and corrections of visible emissions and releases of dust debris are an ongoing daily requirement.

B. Soil Quality.

The Contractor shall not contaminate the soil. An approved impervious covering must be placed on the ground under the work and decontamination areas and under waste containers. In the event that it is not practical to place tarpaulins directly on the ground, shielding devices must be supported by suitable frame works to prevent falling contaminants from escaping.

Prior to the start of any work, the Contractor and the Engineer shall make a site inspection to determine the cleanliness of the area. Clean-up procedures that are required as a result of soil contamination caused by the Contractor shall be the responsibility of the Contractor. The Contractor shall pay all associated costs of the cleanup including, Licensed Site Professional services and documentation.

The Contractor shall perform a pre-job and post-job soil analysis for lead. The Engineer will select locations for sampling within the likely dispersion zone of airborne dust or spills of debris.

The number of sites will be sufficient to properly characterize project conditions. Particular attention will be paid to wind direction, height of the structure, and the dust-producing nature of the operation when selecting the sites. Samples around equipment, in debris containerizing areas, inside and around regulated areas, beneath and around the structure being prepared and other locations of potential public or environmental exposure will be included.

The Contractor shall collect samples prior to the commencement of activities in a given area (e.g., collect samples in equipment staging areas prior to mobilization in those areas, and collect samples around the structure prior to the erection of the containment). A plot plan showing actual locations of sample sites shall be given to the Engineer. Samples shall be collected in the identical locations upon completion of all project activities.

Sample Removal Criteria

The Contractor shall comply with the following minimum requirements for the collection of each sample:

a) Tools and resealable containers for the collection and storage of the samples shall be comprised of a material that will not contaminate the samples.
b) Place a 1 ft^2 template at each sample site. Remove plugs of ground (soil) measuring ¾ in. in diameter and ½ in. in depth from the four corners of the template and from the center. Place the 5 plugs into a single sample container. This represents a single sample from the test site.
c) Clean the sampling tool with deionized water and move the template 3 in. in any direction and collect a duplicate sample (5 plugs). Package the sample in a separate container.
d) Accurately measure and document the specific location of each sample site in order for the precise locations to be resampled upon project completion.
e) Identify each sample container with the following minimum information: date of collection, contract number, specific location of the sample, and name and signature of the person removing the sample. Complete a chain of custody record.

Repeat the procedure at each sampling location, cleaning the sampling tool prior to each use.

Acceptance Criteria for Ground (Soil) Analysis

The soil samples shall be analyzed for lead in accordance with EPA Method 3050 or approved equivalent method by a State-certified laboratory.

The ground (soil) is considered to have been impacted by project activities based on increases over the geometric mean pre-job lead concentration. If the geometric mean pre-job total lead concentration is less than 200 ppm, an impact is considered to have occurred if the post-job geometric mean lead concentration is an increase of 100 ppm or more. If the pre-job concentration is greater than 200 ppm, an impact is considered to have occurred if the post-job geometric mean lead concentration exceeds the pre-job geometric mean plus 2 standard deviations, or an increase of 100 ppm occurs, whichever is greater.

The Contractor shall provide the Engineer with verbal results of the laboratory analysis within 7 calendar days, and a written summary report within 14 calendar days after the sampling was performed.

C. Water Quality.

The Contractor shall take all necessary precautions to prevent debris due to paint related activities from entering the water. Any notification and clean-up procedures required to abate lead contamination in sediments or water shall be the responsibility of the Contractor. The Contractor shall protect all drains to prevent debris from entering the storm sewer system.

For bridges over water, the Contractor shall provide water booms, a method for anchoring the water booms and a procedure for removing the debris that inadvertently enters the water.

961.67: Containment

The Contractor shall design, install, and maintain a containment to retain water, debris, and paint used during cleaning, surface preparation, and coating operations. The containment shall be designed to reduce worker exposure to lead, protect vehicular traffic, pedestrians, and the surrounding environment.

Table 961.67-1 outlines the minimum requirements for containment design for various activities, such as: cleaning, surface preparation, and paint application. Containment classifications and

descriptions are based on SSPC – Guide 6, Guide for Containing Debris Generated During Paint Removal Operations.

Table 961.67-1: Minimum Requirements for Containment Design

	Dry Abrasive Blasting, Class 1A	**Power Washing or Wet Abrasive Blasting, Class 1W**	**Power Tool Cleaning (both vacuum-assisted and not), Class 2P**	**Coating Application, Class 3A**
Containment Materials	A1 Rigid or A2 Flexible			
Penetrability	B1 Air Impenetrable	B1 Air Impenetrable and B3 Water Impenetrable	B1 Air Impenetrable	B1 Air Impenetrable
Support Structure	D1 Fully Sealed	D1 Fully Sealed	D2 Partially Sealed	D2 Partially Sealed
Entryway	E2 Re-sealable Door	E2 Re-sealable Door	E3 Overlapping Door	E3 Overlapping Door
Air Make-Up	F1 Controlled Air	F2 Open Air Supply	F2 Open Air Supply	F2 Open Air Supply
Input Air Flow	G2 Natural Input Air			
Air Pressure	H1 Instrumentation and H2 Visual Verification	H3 Not Required	H3 Not Required	H3 Not Required
Air Movement	I1 Minimum Specified	I2 Not Specified	I2 Not Specified	I2 Not Specified
Exhaust Dust Filtration	J1 Air Infiltration	J2 Not Required	J2 Not Required	J1 Air Infiltration

A. Engineering.

The Contractor shall provide plans and calculations detailing the proposed method of containment and ventilation. The plans shall include an elevation view of the containment enclosure clearly showing any encroachments on the surroundings. The vertical clearance shall be maintained above any active travel lanes.

The plans shall contain details of the method of sealing joints, the entrance/exit openings, air intake points (including filters, louvers, and baffles), type/placement of lighting systems, and connections to the bridge. Methods of attachment that require welding, drilling, bolting, or any methods requiring alteration of the structure or part of it, are not allowed.

The Contractor shall analyze the bridge to determine its ability to safely support the proposed containment system, vehicular traffic, and the Contractor's vehicles and equipment. The following calculations are required: the maximum dead and live load imposed on the bridge by the containment system, and the maximum allowable load for the floor/platform. The calculations shall include an analysis of the stresses in all affected members and applicable load rating capacities for

Type H, Type 3, and Type 3S2 AASHTO truckloads. The stress limits for all loads shall not exceed 120% of the inventory level allowable stress.

If the containment system is suspended from the bridge, each connection to the bridge shall have a tension load cell attached. A multi-channel digital load indicator shall be connected to all load cells and located in an accessible area. The Contractor shall report load readings to the Engineer at scheduled intervals (or at times) directed by the Engineer. The load indicator shall be capable of storing peak load readings.

All containment systems shall be analyzed to determine the amount of stress applied to the bridge as a result of wind loads on the containment. The Contractor shall calculate an "allowable wind speed" which will be used, in the field, to determine the threshold for dismantling the containment system.

B. Material Requirements.

All tarps, drapes and plastic sheeting materials used for containment or ground cover shall be fire-retardant and impermeable to air and water. All materials shall be in good condition.

C. Lighting.

Light at the steel surface within the enclosure shall be maintained by the Contractor at a minimum of 30 fc as measured by a light meter. Such lighting shall be maintained throughout the surface preparation, painting, and inspection activities. The use of explosion-proof lighting is mandatory.

The Contractor shall maintain, as fully operational and functional, all existing lighting systems including navigation lights, aerial lighting, and roadway or parking lot lighting.

If existing lighting will be concealed, the Contractor shall install temporary lighting. A temporary lighting plan shall be included in the Contractor's submittal and forwarded to the Coast Guard or FAA, if appropriate, for approval in advance of the work.

D. Field Operations.

All debris and abrasive, which have accumulated, as the result of surface preparation shall be vacuum cleaned at a frequency specified in the Contractor's containment submittal, or more frequently if directed by the Engineer. Prior to removal or relocation to another point along the structure, all debris must be removed from the containment materials and equipment. The level of cleanliness shall be such that wind or physical contact during handling and transportation does not dislodge debris or dust.

E. Ventilation.

When negative pressure is required within a containment system, the designed system shall maintain a minimum negative pressure as measured by 0.76 mm (0.03 in.) of water column relative to external ambient air. Air velocity within the enclosure shall meet the minimum requirements of 30 m/min (100 ft/min) crossdraft and 18 m/min (60 ft/min) downdraft. Submittals shall include a description of the dust collection and filtration equipment, including the equipment data sheets and airflow capacity.

961.68: Handling of Hazardous Waste and Reporting Release Programs

The Contractor shall submit a plan to the Engineer detailing all aspects of waste management including an Emergency Response Contingency Plan in accordance with 310 CMR 30.00 and 310 CMR 40.00. The plan shall detail the methods for the collection, handling, sampling, testing, site storage, and disposal of wastewater, lead paint and related debris. The Contractor and the Department are the co-generators of the waste. The Department will provide the EPA identification number and the Contractor is responsible for all other waste management.

A. Waste Sampling, Testing and Classification.

All waste streams generated as part of the work shall be tested by TCLP for all eight metals to determine proper disposal. The Engineer shall be the final authority on what shall be tested for possible contamination. Four samples representative of each waste stream shall be collected and tested in accordance with 310 CMR 30.155B (EPA SW846 Method 1311)

The Engineer must be notified of the date and time of sample collection prior to sampling activities. The Contractor, in the presence of the Engineer, shall perform sampling for testing and a State certified laboratory shall perform testing. Chain of custody must be adhered to for sample removal. TCLP test results certified by the testing laboratory shall be provided to the Engineer. The following information must be contained in the laboratory report as a minimum:

- Contract number
- Bridge Identification Number (BIN)
- Identification of the waste stream analyzed
- Number of samples collected and tested
- Dates of sampling and testing
- Defined laboratory test procedures
- The names and signatures of sampling technicians and laboratory technicians
- Summary of test results

The Contractor shall provide the Engineer with an original signed copy of the report no later than 10 days after the samples have been collected.

Non-hazardous waste shall not be mixed with hazardous waste. The DEP requires that a mixture of non-hazardous waste with hazardous waste must be treated as hazardous.

All debris cleaned and collected from abutments, pier caps, girder flanges and other areas of collection shall be disposed of properly. Debris which include, but not limited to, sand, gravel, bituminous materials and bird excrement shall be packaged and stored separately from waste generated as a result of surface preparation. A representative sample of the debris shall be analyzed to determine its classification prior to disposal.

All wastes generated through the use of steel abrasives shall be treated as hazardous and identified as such to the treatment facility.

B. Waste Handling, Packaging, and Storage.

Lead paint and related debris must be collected daily and placed in DOT approved containers of good integrity (i.e. no dents, holes, missing lids or locking mechanisms, etc.). The Contractor shall

inspect drums weekly and the results recorded in an on-site logbook accessible to the Engineer. Containers shall be closed and clearly labeled to identify the contents. Hazardous wastes must be labeled with the words "HAZARDOUS WASTE," the name of the waste, the hazards associated with the waste, and the date when accumulation began in the container. The hazardous waste label shall also include the generators' name, address, and EPA identification number.

Containers shall be stored in a safe and suitable location at the job site. Storage shall be in a manner that protects the public and the environment (i.e. on a level impervious base, away from waterways, etc. Storage area(s) shall be approved by the Engineer prior to generating wastes.

Storage areas shall be labeled with the words "HAZARDOUS WASTE." Appropriate security (i.e. fencing, locked gated, etc.) must be maintained at the site to avoid injury, theft or vandalism with regards to hazardous waste. Once a container in the work area is full, it shall be moved to the secure storage area within 3 days. If a suitable location for hazardous waste storage does not exist on-site, the Contractor shall find an alternate storage site. The alternate storage shall only be allowed with documented permission by the Engineer and the DEP. Evidence of improper storage and handling shall be cause for immediate shutdown until corrective action is taken.

Storage of hazardous waste on site is limited to 90 days with the start date of initial accumulation in each container. The Engineer is to be informed one week in advance of the planned date(s) when hazardous waste is to be removed from the job site.

C. Waste Transportation and Disposal.

Hazardous waste shall only be removed from the site by DEP licensed haulers in the presence of the Engineer. Only EPA licensed Treatment Storage Disposal Facilities (TSDF) shall accept the hazardous waste. The Contractor shall submit the name, address, phone number, name of contact person and the EPA identification number of the TSDF. Before the start of work, the Contractor shall provide the Engineer with a letter of intent from the TSDF stating that they agree to accept and treat said waste in accordance with all state and federal regulations. All hazardous waste manifests must be signed by the Engineer upon removal of the waste. The Contractor shall provide the Engineer with a Certificate of Disposal upon receipt from the TSDF. The Engineer must receive a signed manifest copy directly from the TSDF.

D. Reportable Releases to the Environment.

The Contractor's on-site emergency response contingency plan shall outline steps to take in the event of a hazardous waste spill or release including procedures for notification to DEP in accordance with 310 CMR 30.00 and 310 CMR 40.00.

The Contractor is advised that a discharge of one or more pounds of lead with a particle size of 0.1 mm (4 mils) or less to the atmosphere, water or soil, within a 24-hour period, is considered to be a reportable release in accordance with 310 CMR 40.00 (40 CFR 300 and 40 CFR 302).

961.69: Submittals

The Contractor shall submit the following written programs and plans to the Engineer within 30 days of the Notice to Proceed. No work shall commence until the Engineer has approved all submittals with the exception of the Worker Health & Safety Program, which will only be received

by the Engineer. Reception of the Worker Health & Safety Submittal does not constitute approval by the MassDOT.

A. Worker Health & Safety Program.

The Contractor shall provide a site-specific compliance program prepared under the direction and approval of a Certified Industrial Hygienist (CIH), in accordance with 29 CFR 1926.62 and 29 CFR 1910.134.

The program shall describe all engineering, administrative, housekeeping and protective equipment that will be used to reduce the exposure of the employees to a level less than the PEL.

The program shall provide the name, address, accreditation, and qualifications for the Certified Industrial Hygienist and the firm(s) that will be utilized for monitoring, testing and analysis. The name and qualifications of the project's competent person shall be included along with an emergency contact person. The Program shall include the following elements:

- Employee Training Program
- Hazard Communication Training Program
- Medical Surveillance and Medical Removal Program
- Procedures for Exposure Monitoring / Initial Assessment
- Respiratory Protection Program
- Recordkeeping
- Protective Clothing and Equipment
- Personal Hygiene Facilities and Equipment
- Housekeeping

B. Environmental Protection and Monitoring Program.

The written program shall ensure the protection of the environment from project activity in accordance with this specification and 40 CFR 50 and 310 CMR 7.00.

The program shall detail programs for monitoring activities and provisions for complying with the results of any monitoring and analysis that is conducted. Included shall be a statement that corrective action will be implemented immediately in the event of unacceptable monitoring results. The program shall include the following elements:

- Procedures for High Volume Air Sampling
- Methods for monitoring and Establishing Baseline Levels
- Methods for Establishing Regulated Areas
- Assessment of Visible Emissions and Releases
- Methods for Sampling and Analysis for soil, waste water and debris

C. Containment.

The Contractor shall provide a written plan and drawings for the method employed for surface preparation, containment and ventilation. The submittal shall be approved and stamped by a Professional Engineer registered in the Commonwealth of Massachusetts. The submittal shall include the following:

- Methods and equipment to be used for precleaning (washing) and surface preparation

- Location of equipment and impact on traffic
- Engineering Calculations: Load-bearing capacity, Wind load and Ventilation
- Connection Details
- Lighting plan
- Drawings and Plans for installing, moving, and removing the containment.
- Provisions for Emergency breakdown of containment.
- Provisions for moving the containment out of navigation lanes when working over active waterways.
- Provisions for the containment of debris that might escape when working over land, streams, rivers, lakes, or other bodies of water.
- Descriptions and product data or cut sheets for all containment system materials and all equipment to be used
- Confirmation that appropriate notification and coordination with other organizations or agencies such as the Coast Guard and Railroad have been accomplished with regard to right of ways, containment clearances, and other project restrictions.

D. Hazardous Waste, Handling & Reporting of Release Programs.

The written program shall establish the procedures that will be followed for the proper handling, packaging and disposal of all waste generated during contract activities. The program shall be in accordance with applicable EPA regulations, the requirements of this specification and 310 CMR 30.00 & 310 CMR 40.00. The program shall include the following elements:

- Methods for Sampling, Testing and Classification
- Methods for Handling, Packaging and Storage
- Identification of Transporter and Treatment Storage and Disposal Facility
- Methods for Reporting Releases into the Environment
- Emergency Response Contingency Plan

COMPENSATION

961.80: Method of Measurement

The above work will be measured as a complete unit. For purpose of estimating partial payments, the work will be separated into distinct phases as listed below and the value of each will be assigned a percentage of the lump sum:

Containment	30%
Clean, Collect and Prime	35%
Intermediate Coat	10%
Finish Coat	10%
Final Inspection	15%

Partial payment for each phase will be based on the length of work completed, divided by the total length of the structure to be painted, or as determined by the Engineer.

Final inspection will be paid after the completion of punch list items, cleaning of the site(s), the removal of all equipment, materials and the removal of contaminated and hazardous waste generated during the cleaning operations.

961.81: Basis of Payment

The work will be paid at the contract price per Lump Sum which shall include full compensation for all labor, equipment, worker protection, environmental compliance, materials, tools, rigging, and all incidentals necessary to complete the work as specified.

Incidental to this work is the removal and replacement of, anti-missile fencing, protective screening, signs and sign supports. The Contractor shall determine if anti-missile fencing, protective screening, signs and sign supports are to be removed to facilitate complete cleaning and painting of the structure as specified. Removal shall be accomplished prior to cleaning activities and will be subject to the approval of the Engineer.

961.82: Payment Items

961.1* Clean and Paint (Overcoat) Bridge No. ___.....Lump Sum
961.2* Clean (Full Removal) and Paint Bridge No. ___.....Lump Sum

* - number assigned to the bridge being painted.

SUBSECTION 965: MEMBRANE WATERPROOFING FOR NEW BRIDGE DECKS

DESCRIPTION

965.20: General

Membrane waterproofing systems are defined as a thin impermeable membrane that is used to protect the concrete deck from penetration of moisture and deicing chemicals.

The work to be performed shall consist of the furnishing and application of an approved membrane system and all concrete surface preparation work necessary to install the membrane system. The membrane waterproofing system applied to the surface of the bridge deck as indicated on the plans shall consist of the primer, spray applied membrane (either methyl methacrylate, polyurea, or polyurethane methyl methacrylate), aggregate keycoat, and polymer modified tack coat.

MATERIALS

965.30: General

Materials shall meet the requirements specified in the following Subsections of Division III, Materials.

Spray-Applied Waterproofing Membrane.....M9.08.1

CONSTRUCTION METHODS

965.40: Submittals

The Contractor shall submit to the Engineer for approval the following documents:

1. Initial submission (at least 30 days prior to application):
    - The membrane system to be installed.

    - The manufacturer's installation instructions for the applicable system.
    - Safety data sheets (SDS) for all components.
    - Cleaning solvents approved by the membrane manufacturer.
2. At the pre-application meeting (at least 14 days prior to application):
    - Manufacturer's written approval of the Applicator's qualifications.
    - The QC Plan in accordance with Subsection 965: Membrane Waterproofing for New Bridge Decks.
    - Installation procedure including storage and protection instructions as well as handling and mixing instructions.
    - List of application equipment to be used.
    - Manufacturer's written approval of the proposed polymer modified tack coat and the application rate that it shall be applied at.
    - Certificate of Compliance certifying that the aggregate for the keycoat meets the required hardness.
3. A minimum of 48 hours prior to installation a certificate of analysis for the proposed polymer modified tack coat shall be submitted by the Supplier of the tack coat to the Engineer for approval.
4. Upon completion of installation:
    - All QC installation test results for the tests specified in the materials section, including the name, address, and contact person of the laboratory that performed the tests and the date of the tests.
    - A Certificate of Compliance, from the membrane waterproofing system manufacturer, certifying that the membrane waterproofing system materials meet the requirements of the manufacturer and the contract specifications.

965.41: Preconstruction

Membrane waterproofing shall be installed in accordance with the manufacturer's instructions. The handling, mixing, and addition of membrane components shall be performed in a safe manner to achieve the desired results in accordance with the manufacturer's recommendations. Care shall be taken to prevent adjacent areas from overspray or other contamination.

965.42: Applicator Qualifications

The Contractor applying the waterproofing system shall be certified by the membrane waterproofing system manufacturer and have at least 2 years of experience in membrane installation. The Engineer shall receive the manufacturer's written approval of the contractor's qualifications at least 30 days prior to the application of any system component. This approval shall apply only to the named individuals performing the application.

965.43: Material Delivery and Storage

All components of the membrane system shall be delivered to the site in the manufacturer's original packaging, clearly identified with the products type and batch number. The storage area for all components shall be cool, dry, out of direct sunlight, and comply with relevant health and safety regulations. Copies of safety data sheets for all components shall be given to the Engineer and kept on site at the Contractor's field office.

965.44: Pre-Application Meeting

A minimum of 14 days before the anticipated start of membrane application, the Contractor shall schedule and conduct a pre-application meeting at the site to review the approved submittals, and other pertinent matters related to the application including the schedule for coordination between trades. At a minimum, the Contractor, the subcontractor performing the application and the Engineer shall be present at the meeting.

965.45: Mockup to Validate Bond Strength

For those projects where the concrete will be aged less than 28 days the manufacturer shall concur that the system is acceptable for use with the shortened aging period and a mockup shall be required. The intent is to validate the bond strength using the membrane waterproofing manufacture's primer and membrane.

In order to emulate the actual placement conditions, the mockup shall take place as close as possible to the intended date of the waterproofing application but be a minimum of 7 days before concrete placement. The mockup activities shall be representative of what will take place during the specified final bridge placement. It shall include the placement and surface preparation of the concrete and installation of membrane waterproofing system.

Inspection and testing shall be in accordance with Tables 965.63-1 and 965.64-1. The results of moisture and adhesion testing performed on a mockup of the bridge deck and closure pours shall meet these specifications. The mockup shall simulate the actual job conditions in all respects including air temperature, transit equipment, travel conditions, admixtures, forming, placement equipment, and personnel. If the mockup is unable to validate that the waterproofing membrane meets the project requirements, then the Engineer may require the Contractor to conduct additional mockups.

Removal of the mockup after its completion shall be the responsibility of the Contractor. In addition to the requirements contained herein, all weather and concrete temperature requirements contained in Subsection 901: Cement Concrete shall be satisfied.

Acceptance of the mockup shall be the responsibility of the Engineer.

965.46: Application

The installation procedure shall consist of preparation of the concrete surface and application of primer, membrane, aggregate keycoat, and polymer modified tack coat. Special attention shall be paid to the bridge deck surface preparation prior to the membrane waterproofing system application. The membrane system shall be installed in accordance with the manufacturer's requirements. The Contractor shall be responsible for the field testing including, but not limited to, adhesion bond testing, deck moisture content measurement, and all other required documentation and reporting.

The membrane waterproofing system shall not be applied in either wet, damp, or foggy weather, or when the ambient temperature is 40°F or below or is forecast to fall below 40°F during the application period. The temperature of the concrete deck surface shall also exceed the dew point by at least 5°F.

The membrane waterproofing shall not be placed until the Contractor is ready to follow within 24 hours with the first layer of hot mix asphalt pavement.

Where the areas to be waterproofed are bound by a vertical surface including, but not limited to, a curb or a wall, the membrane waterproofing system shall be continued up the vertical as necessary. A neat finish with well-defined boundaries and straight edges shall be provided.

A. Concrete Surface Preparation.

Concrete surfaces which are to be waterproofed shall be screeded to the true cross section and sounded. All spalls and depressions shall be repaired prior to the application of the primer. Depressions shall be filled to a smooth flush surface with 1:2 mortar (one part cement to two parts sand) or an approved rapid setting patching mortar that is compatible with the membrane waterproofing system. Other surfaces shall be trimmed free of rough spots, projections, or other defects which might cause puncture of the membrane so that the surface profile of the prepared concrete surface shall not exceed a ¼ inch amplitude, peak to valley.

The use of resin or wax-based deck curing membranes are not acceptable. Unless a mockup is completed in accordance with 965.45: Mockup to Validate Bond Strength, the concrete shall be aged a minimum of 28 days, including curing time, before application of the membrane waterproofing system.

Immediately prior to the application of the primer, the concrete to which the membrane is to be applied shall be cleaned of all existing bond inhibiting materials in accordance with ASTM D4259 or as required by the manufacturer. Dust or loose particles shall be removed using clean, dry, oil-free compressed air or industrial vacuums. The surface preparation shall produce a clean dry surface and ensure that the concrete surface is free of asphaltic product, surface laitance, oil staining, soiling, and dust.

Any exposed steel components to receive membrane waterproofing shall be blast cleaned in accordance with the Society for Protective Coatings (SSPC) SSPC-SP6 or as required by the manufacturer and coated with the membrane waterproofing system within the same work shift.

B. Applying Primer.

The primer shall only be applied when the temperature of the concrete deck surface exceeds the dew point by at least 5°F and when the concrete deck surface has a moisture content of 5% or less, as confirmed by a portable electronic surface moisture meter supplied by the Contractor.

The primer shall be applied in a manner to ensure full coverage and shall consist of one coat with an overall coverage rate of 125-175 ft^2/gal unless otherwise recommended in the manufacturer's written instructions. All components shall be measured and mixed in accordance with the manufacturer's recommendations. The primer shall be spray applied using a single or multiple component spray system approved for use by the manufacturer. If required by site conditions, brush or roller application shall be allowed. The primer shall be allowed to cure tack-free for a minimum of 30 min or as required by the manufacturer's instructions, whichever time is greater, prior to application of the first lift of waterproofing membrane.

A second coat of primer shall be required if the first coat is absorbed by the concrete. The membrane shall be applied within the primer re-coat drying time allowed by the manufacturer but

in no case shall it exceed 24 hr. Beyond this period, the surface shall be prepared again and re-primed following the manufacturer's recommendations prior to membrane application.

C. Applying Membrane.

The waterproofing membrane shall be applied following the approved mixing and application procedure. The membrane shall be spray applied, with the mixing of the two components taking place at the nozzle and shall be applied to the primed deck in accordance with the manufacturer's instructions. The spray equipment shall be controlled so that the quantities applied may be monitored and shall allow for coverage rates to be checked.

Following the application of the membrane waterproofing system, the cured surface shall be visually inspected. If any defects or pinholes are found, an appropriate quantity of membrane material shall be mixed and repaired in accordance with 965.46: Application, Part D. In all cases, the thickness of the repair shall be sufficient to bring the area up to the specified thickness. The thickness of the repair patch, measured over peaks, shall be a minimum of 80 mils or the thickness used to pass the ASTM C1305 Crack Bridging Test, whichever is greater.

For multi-stage construction, the subsequent stage membrane application shall overlap the existing cured membrane from the previous stage to form a continuous layer with a 6-in. overlap onto the existing membrane. The existing membrane shall be cleaned of all contamination including tack coat material or dirt to an edge distance of a least 6 in. and wiped with a solvent as approved by the membrane waterproofing manufacturer.

D. Repairs.

If an area of membrane requires repair or if the membrane becomes damaged, a patch repair shall be carried out to restore the integrity of the membrane waterproofing system. The damaged area shall be cut back to sound materials and wiped with a solvent up to a width of at least 6 in. beyond the periphery of the damaged area, removing contaminants. The concrete shall be primed as necessary followed by the application of the membrane. A continuous layer shall be obtained over the concrete with a 6-in. overlap onto the existing membrane. The solvent shall be as approved by the membrane waterproofing manufacturer. Repairs shall comply with the manufacturer's guidelines for any over-coating times.

Where the membrane is to be joined to existing cured material and at joints, the new application shall overlap the existing membrane/joint by at least 4 in. The existing membrane/joint shall be cleaned of all contamination including tack coat material or dirt to an edge distance of a least 6 in. and wiped with a solvent as approved by the membrane waterproofing manufacturer.

If pin holes or holidays are observed in the membrane surface they shall be repaired in accordance with the manufacturer's instructions and the approved Contractor Quality Control Plan (QC Plan).

In all cases, the thickness of the repair shall be sufficient to bring the area up to the specified thickness. The thickness of the repair patch, measured over peaks, shall be a minimum of 80 mils or the thickness used to pass the ASTM C1305 Crack Bridging Test, whichever is greater.

E. Applying Aggregate for Keycoat.

Following the membrane application, an additional layer of membrane or resin, compatible with the membrane, shall be spray applied to a thickness of 30 to 40 mils into which an aggregate

approved by the membrane manufacturer shall be broadcast ensuring a minimum coverage of 95%. The application rate shall be designated by the manufacturer. Loose aggregate shall be removed with brooms or oil/moisture-free compressed air before applying the tack coat.

For multi-stage construction, the aggregate keycoat of the previous stage shall be applied to a limit of 6-in. from the stage construction joint to allow the subsequent stage membrane material to bond directly to the existing membrane. The application of the aggregate keycoat for the subsequent stage shall cover the 6-in. overlap.

F. Applying Tack Coat.

The polymer modified tack coat shall be applied in accordance with the membrane manufacturer's recommendations after a minimum of three hours from initial membrane application. The tack coat shall be allowed to cure for a minimum of 1 hr prior to HMA paving. The tack coat application rate shall be in accordance with the manufacturer's recommendation. The application rate of the tack coat shall be set at a rate that achieves the specified residual rate and coverage. Tack coat shall be applied to cover a minimum of 95% of the membrane surface. The tack coat application shall be monitored by Quality Control personnel in accordance with the approved QC Plan.

G. HMA Pavement Over Membrane.

Placement of the HMA surface shall be in accordance with Subsection 450: Hot Mix Asphalt Pavement and the contract specifications. During paving, a light soap spray should be applied to the paving equipment wheels to prevent tack coat pick-up.

965.47: Protection of Exposed Surfaces

The Contractor shall exercise care in the application of the waterproofing membrane system to prevent surfaces not receiving treatment from being spattered or marred, such as the face of curbs, copings, finished surfaces, substructure exposed surfaces, and outside faces of the bridge. Any material that spatters on these surfaces shall be removed and the surfaces cleaned to the satisfaction of the Engineer.

CONTRACTOR QUALITY CONTROL

965.60: General

The Contractor shall provide a Quality Control System (QC System) and a QC Plan adequate to ensure that all materials and workmanship meet the required quality levels for each specified Quality Characteristic. The Contractor shall provide qualified QC personnel and QC laboratory facilities and perform Quality Control inspection, sampling, testing, data analysis, corrective action (when necessary), and documentation as outlined further below.

965.61: Contractor Quality Control Plan

The Contractor shall provide and maintain a QC Plan which should sufficiently document the QC processes of all Contractor parties (i.e. Prime Contractor, Subcontractors, Producers) performing work required under this specification.

A. QC Plan Submittal Requirements.

At the preconstruction meeting, the Contractor shall be prepared to discuss the QC Plan. Information to be discussed shall include the proposed QC Plan submittal date, QC organization, and sources of materials. The Contractor shall submit the QC Plan to the Engineer for approval not less than 30 days prior to the start of any work activities related to membrane waterproofing installation (including preparation of underlying surface) addressed in 965.40: Submittals through 965.47: Protection of Exposed Surfaces. The Contractor shall not start work on the subject work items without an approved QC Plan.

B. QC Plan Format and Contents.

The QC Plan shall be structured to follow the format and section headings outlined in the MassDOT Model QC Plan. The pages of the QC Plan shall be sequentially numbered. The QC Plan shall address, in sufficient detail, the specific information requested under each section and subsection contained in the MassDOT Model QC Plan.

C. QC Plan Approval and Modifications.

Approval of the QC Plan will be based on the inclusion of the required information. Revisions to the QC Plan may be required prior to approval for any part of the QC Plan that is determined by the Department to be insufficient. Approval of the QC Plan does not imply any warranty by the Engineer that the QC Plan will result in completed work that complies with the specifications. It remains the responsibility of the Contractor to demonstrate such compliance. The Contractor may modify the QC Plan as work progresses when circumstances necessitate changes in Quality Control personnel, laboratories, or procedures. In such case, the Contractor shall submit an amended QC Plan to the Department for approval a minimum of three calendar days prior to the proposed changes being implemented.

965.62: Quality Control Personnel Requirements

The Contractor's Quality Control organization shall, at a minimum, consist of the personnel qualified by the manufacturer to perform the required inspection and testing. Every effort should be made to maintain consistency in the QC organization; however, substitution of qualified personnel shall be allowed. When circumstances necessitate substitution of QC personnel not originally listed in the approved QC Plan, the Contractor shall submit an amended QC Plan for approval in accordance with 965.61: Contractor Quality Control Plan, Part C.

965.63: Quality Control Inspection

The Contractor shall perform QC inspection of all work items addressed under this specification. Inspection activities during placement may be performed by qualified production personnel (e.g. Skilled Laborers, Foremen, and Superintendents). However, the Contractor's QC personnel shall have overall responsibility for QC inspection. The Contractor shall not rely on the results of the Engineer's Acceptance inspection for QC purposes. The Engineer shall be provided the opportunity to monitor and witness all QC inspection.

QC inspection activities must address the following four primary components:

a. Equipment
b. Materials

c. Environmental Conditions
d. Workmanship

The minimum frequency of QC inspection activity shall be in accordance with the requirements below and as outlined in the approved QC Plan. The Contractor shall document the results and findings of QC inspection.

The quality of each waterproofing membrane surface will be inspected and evaluated on the basis of Lots and Sublots. A Lot is defined as an isolated quantity of work which is assumed to be produced by the same controlled process. A Lot shall constitute no greater than the entire waterproofing membrane surface area on the bridge deck completed within the same construction season using the same placement process. Each Lot shall be divided into Sublots of equal sizes unless specified otherwise below.

All inspection reports shall be submitted to the Engineer within 72 hours of the test completion.

A. QC Inspection for Preparation of Underlying Surface.

The Contractor's personnel will perform QC inspection during preparation of the underlying surface in accordance with the requirements of 965.46: Application, Part A. The minimum items to be inspected shall be as outlined in Table 965.63-1. The Contractor shall identify in the QC Plan the specific inspection activities necessary to ensure the quality of the work, including any additional inspection activities not specifically listed in the table.

B. QC Inspection for Placement of Waterproofing Membrane.

The Contractor's QC personnel will perform QC inspection at the site of waterproofing membrane field placement to ensure that the production and placement processes are providing work conforming to the contract and manufacturer requirements. The minimum items to be inspected for each waterproofing membrane Lot shall be in accordance with the requirements of 965.43: Material Delivery and Storage through 965.47: Protection of Exposed Surfaces and as outlined in Table 965.63-1. The Contractor shall identify in the QC Plan the specific inspection activities necessary to ensure the quality of the work, including any additional inspection activities not specifically listed in the table. Inspection shall include:

a. Pin Hole/Holidays: The surface of the membrane shall be inspected for pin holes and/or holidays. All pin hole/holidays shall be located, marked for repair, documented, and repaired in accordance with a repair procedure developed by the manufacturer and approved by the Engineer.
b. Coverage Rates: Rates for all layers shall be monitored by checking quantity of material used against the area covered.
c. Visual inspections shall be conducted throughout the application process. The Contractor shall take progress photos for incorporation with the final review report to the Engineer.

Table 965.63-1: Minimum QC Inspection of Waterproofing Membrane Operations

Inspection Component	Inspection Attribute	Minimum Inspection Frequency	Point of Inspection	Inspection Method
Equipment	As specified in QC Pan	Per QC Plan	Per QC Plan	Per QC Plan
Materials	Primer (Correct Type)	Per QC Plan	Per QC Plan	Check Manufacturer COC
	Membrane (Correct Type)	Per QC Plan	Per QC Plan	Check Manufacturer COC
	Aggregate (Correct Type)	Per QC Plan	Per QC Plan	Check Manufacturer COC
	Tack Coat (Correct Type)	Per QC Plan	Per QC Plan	Check Manufacturer COC
Environmental Conditions	Temperature of Air & Underlying Surface	1 per Day	At Project Site	Check Measurement
	Underlying Surface (Soundness)	Per QC Plan	Underlying Surface	Visual Check
	Surface (Standing Moisture)	Per QC Plan	Underlying Surface & Membrane Surface	Visual Check
	Surface (Cleanliness)	Per QC Plan	Underlying Surface & Membrane Surface	Visual Check
Workmanship	Pin Hole/Holidays	Per QC Plan	Membrane Surface	Visual Check
	Membrane Coverage Rate	Per QC Plan	From Distributor	Check Measurement
	Aggregate Coverage Rate	Per QC Plan	Membrane Surface	Visual Check
	Tack Coat Application Rate	Per QC Plan	From Distributor	Check Measurement

965.64: Quality Control Sampling and Testing Requirements

The Contractor's QC personnel will perform QC sampling and testing at the site of membrane waterproofing placement to ensure that the production and placement processes are providing work conforming to the contract and manufacturer's requirements. The Engineer will not sample or test for Quality Control or assist in controlling the Contractor's operations. All QC sampling and testing shall be in accordance with the current AASHTO, ASTM, NETTCP, or Department procedures specified in Table 965.64-1. The Contractor shall furnish approved containers for all material samples. The Engineer shall be provided the opportunity to monitor and witness all QC sampling and testing.

The following testing shall be conducted and recorded on a test report form to be submitted to the Engineer. All reports shall be submitted to the Engineer within 72 hours of the test completion.

a. Deck moisture: The concrete deck's surface moisture content shall be measured to determine if it is suitable to allow for installation to proceed.
b. Primer Adhesion: Random tests for adequate tensile bond strength shall be conducted in accordance with ASTM D7234 using the membrane Manufacture's primer. Minimum bond strength of 100 psi and failure in the concrete will be required for acceptance. Testing shall be at a frequency of 1 test per 5,000 ft^2 with a minimum of 3 tests per day. Areas smaller than 5,000 square feet shall receive a minimum of 3 tests.
c. Film Thickness:
   - Wet film thickness shall be checked every 300 ft^2 in accordance with ASTM D4414 using a gauge pin or standard comb type thickness gauge or a magnetic gauge. Film thickness checks shall be carried throughout the application process.
   - Dry Film Thickness: If the membrane waterproofing system cures too quickly to perform wet film thickness testing, dry film thickness shall be checked every 300 ft^2 in accordance with ASTM D6132 using magnetic or ultrasonic gauges or using a destructive method. If a destructive method is used, areas shall be repaired in accordance with 965.46: Application, Part C.
d. Membrane Adhesion: Random tests for adequate tensile bond strength shall be conducted in accordance with ASTM D7234 using the membrane Manufacture's primer and membrane. The portion of the membrane to be tested shall be separated from the rest of the membrane surface prior to performing the test so only that portion under the dolly receives the tensile force. A minimum bond strength of 100 psi and failure in the concrete will be required for acceptance. Testing shall be at a frequency of 1 test per 5,000 ft^2 with a minimum of 3 tests per day. Areas smaller than 5,000 ft^2 shall receive a minimum of 3 tests.

The Contractor shall take a representative sample of the membrane from that day's installation. The samples shall consist of two 10-in. by 10-in. square samples of the membrane with smooth surfaces. The primer and aggregate shall not be incorporated into the sample. The sample shall be sprayed on a non-adhesive surface using the same application techniques used for the deck. The sample shall be removed from the non-adhesive surface by the Contractor in a manner that does not damage the sample and that sample shall be delivered to the Engineer for Department testing.

Table 965.64-1: Minimum Quality Control Sampling & Testing of Waterproofing Membrane Lots

Quality Characteristic	Test Method(s)	Sublot Size	Minimum Test Frequency	Point of Sampling	Engineering Limits
Deck Concrete Moisture	Manufacturer's Recommendation	5,000 ft^2	1 per Sublot (see Note 1)	Deck Concrete Surface	≤ 5%
Primer Adhesion to Concrete	ASTM D7234	5,000 ft^2	1 per Sublot (see Note 1)	Primed Concrete Surface	≥ 100 psi minimum; and failure in concrete
Film Thickness	Wet: ASTM D4414 Dry: ASTM D6132 or other approved method	300 ft^2	1 per Sublot (see Note 1)	Membrane Surface	≥ Thickness used to pass ASTM C1305
Membrane Adhesion to Concrete	ASTM D7234	5,000 ft^2	1 per Sublot (see Note 1)	Membrane Surface	≥ 100 psi minimum; and failure in concrete
Note 1: In the event that the total daily production is less than three Sublots, a minimum of three random QC samples shall be obtained for the day's production.					

DEPARTMENT ACCEPTANCE

965.70: General

The Department is responsible for performing all Acceptance activities and making the final Acceptance determination for each membrane waterproofing surface. The Department's Acceptance system will include monitoring the Contractor's QC activity and performing Acceptance inspection and testing in order to determine the quality and corresponding payment for each Lot.

965.71: Acceptance Inspection

The Engineer will perform Acceptance inspection of all work items addressed under Subsection 965: Membrane Waterproofing for New Bridge Decks to ensure that materials and completed work are in conformance with the contract requirements. Acceptance inspection is intended to visually assess the quality of each Lot produced and placed and will address only the inspection components of Materials and Workmanship in support of the Department's final Acceptance determination.

All Acceptance inspection activities by the Department will be performed independent of the Contractor's QC inspection.

Table 965.71-1: Department Acceptance Inspection of Waterproofing Membrane Operations

Inspection Component	Inspection Attribute	Minimum Inspection Frequency	Point of Inspection	Inspection Method
Materials	Primer (Correct Type)	1 Per Day	At Placement Site	Check Manufacturer COC
	Membrane (Correct Type)	1 Per Day	At Placement Site	Check Manufacturer COC
	Aggregate (Correct Type)	1 Per Day	At Placement Site	Check Manufacturer COC
	Tack Coat (Correct Type)	1 Per Day	At Placement Site	Check Manufacturer COC
Workmanship	Pin Hole/Holidays	25% of Sublots	Membrane Surface	Visual Check
	Membrane Coverage Rate	25% of Sublots	From Distributor	Check Measurement
	Aggregate Coverage Rate	25% of Sublots	Membrane Surface	Visual Check
	Tack Coat Application Rate	25% of Sublots	From Distributor	Check Measurement

965.72: Acceptance Sampling and Testing Requirements

The two 10-in. by 10-in. samples fabricated by the Contractor during installation shall be submitted to the Department for testing.

Table 965.72-1: Department Acceptance Sampling and Testing of Waterproofing Membrane Lots

Quality Characteristic	Test Method(s)	Engineering Limits
Minimum Thickness (Membrane only)	ASTM D6132 or other approved method	≥ thickness used to pass ASTM C1305
Percent Elongation at Break	ASTM D638	≥ 130%
Tensile Strength	ASTM D638 Type IV @ 2 in./min	> 1,100 psi
Shore Hardness	ASTM D2240 (see Note 1)	≥ 50 Type 00
Note 1: ASTM D2240 shall be modified in accordance with ASTM C836 Section 6.5.		

965.73: Lot Acceptance Determination Based on Inspection Results

The Engineer's Acceptance inspection results will be used in the final Acceptance determination for all Lots. Prior to final Acceptance of each Lot produced and placed, the Engineer will periodically evaluate all Acceptance inspection information for the prepared underlying surface and the Lot. The materials and product workmanship for the completed work will be evaluated for conformance with the plans and the requirements specified in 965.40: Submittals through 965.47: Protection of Exposed Surfaces.

When the Acceptance information identifies deficiencies in either material quality or product workmanship for any underlying surface location or waterproofing membrane Sublot(s), the location or Sublot(s) will be isolated and further evaluated by the Engineer through additional Acceptance inspection (or sampling and testing, if relevant or possible). Depending upon the findings of the additional Acceptance inspection activity, the Engineer will determine the disposition of the nonconforming work in accordance with Subsection 5.03: Conformity with Plans and Specifications.

965.74: Lot Acceptance Determination Based on Testing Data

Evaluation of Testing Data

Prior to final Acceptance of each Lot produced and placed, the Engineer will periodically evaluate all available Acceptance testing data for the Lot.

Conformance with Engineering Limits

The Engineer will evaluate all Acceptance testing data and Contractor QC testing data for each Lot to determine conformance with the Engineering Limits in Tables 965.63-1 and 965.72-1. Each Sublot test value for the Acceptance Quality Characteristics identified in the tables shall be within the Engineering Limits.

If a Sublot test result is outside of the Engineering Limits, the Contractor and Engineer will further assess the Sublot quality to determine whether the material in the Sublot can remain in place. The Engineer will determine the disposition of the Sublot in accordance with Subsection 5.03: Conformity with Plans and Specifications.

If the Engineer's assessment determines that the material quality is not sufficient to permit the Sublot to remain in place the Sublot shall be removed and replaced. When a nonconforming Sublot is corrected or replaced, the Engineer will perform Acceptance testing of the Sublot and evaluate the test results for conformance with the Engineering Limits. Once the above requirements have been met, the Engineer will accept all completed Sublots.

965.75: Final Lot Acceptance Determination

For each Lot produced and placed, the Engineer will evaluate all Acceptance inspection and testing data for the Lot after all Sublots are complete in place. The final review and visual inspection shall be conducted jointly by the Contractor and Engineer. Irregularities or other items that do not meet the requirements of the specifications and plans shall be addressed/repaired at this time, at no additional cost to the Department.

After each Lot is complete, including any corrective action, the Engineer will perform a final evaluation of all Acceptance data and Contractor QC data for the Lot. The Engineer will accept the Lot if the Engineer's evaluation of all inspection and testing data for the Lot is in conformance with this specification and the contract documents.

COMPENSATION

965.80: Method of Measurement

Membrane Waterproofing for Bridge Decks will be measured by the square foot of the membrane system complete in place with no allowance for overlapping or for edges turned up or carried into recesses for seals, except that the area of the full membrane turned down in back of the backwalls and extended up the face of the curb or under and in back of median curbs shall be included for payment.

965.81: Basis of Payment

Payment under this Item shall be made at the unit bid price per square foot, which includes the primer, spray applied membrane, aggregate for keycoat, polymer modified tack coat, and all labor, materials, equipment, safety devices, tools, inspections and incidentals necessary to complete all work specified under this Item.

965.82: Payment Items

965. Membrane Waterproofing for Bridge Decks .....Square Foot

SUBSECTION 966: MEMBRANE WATERPROOFING FOR BRIDGE DECK REPAIRS

DESCRIPTION

966.20: General

Membrane waterproofing applied to the repaired deck surface as indicated on the plan and elsewhere as directed shall consist of one of the following systems:

- Sheet membrane - either reinforced rubberized asphalt or reinforced tar and resin.
- Hot applied rubberized asphalt membrane. This system shall not be used on grades in excess of 3 percent.

MATERIALS

966.30: General

Materials shall meet the requirements specified in the following Subsections of Division III, Materials:

Asphalt Emulsions.....M3.03.1
Sheet Membrane M9.08.2
Hot Applied Rubberized Asphalt Membrane M9.08.3
Primer.....M9.09.1

CONSTRUCTION METHODS

966.40: Application

A. Preparation of Surface.

No waterproofing shall be done in wet, damp or foggy weather, nor when the ambient temperature is 40°F or below, without permission of the Engineer.

The membrane waterproofing on bridge deck repairs shall not be placed unless the Contractor is ready to follow within 24 hours with the first layer of hot mix asphalt pavement; a longer period of time will be allowed only with the approval of the Engineer.

Immediately prior to the membrane application, the concrete surface shall be thoroughly swept and blown clean with an air compressor to remove any loose debris. If the concrete surface is damp it shall be dried by use of a propane gas torch or similar equipment.

B. Applying Primer.

The primer shall be applied to all surfaces at a rate of 0.015 gal per yd^2. The primer shall be thoroughly mixed and continuously agitated during application. It shall be applied by spray or squeegee. It shall thoroughly dry before application of the rubberized asphalt membrane. Should the membrane not be placed over the primed surface within 8 hours the surface shall be re-primed.

C. Applying Membrane.

(1) Sheet Membranes

This system shall consist of the application of preformed reinforced rubberized asphalt membrane. Composition and dimensional requirements shall be as stipulated by the manufacturer of the sheet membrane.

Membrane Application

Membrane application shall be in accordance with the manufacturer's instructions. The preformed membrane sheets shall be applied to the primed surfaces either by hand or by mechanical applicators.

The membrane sheet shall be placed in such a manner that a shingling effect is achieved in the direction that water will drain. After being laid, the membrane sheets shall be rolled with hand rollers or other apparatus as necessary to develop a firm and uniform bond with the primed concrete surface. Wrinkles and air bubbles shall be eliminated to the extent possible.

A mastic, approved by the Sheet Membrane manufacturer, shall be applied as a bead along the exposed edge of the membrane sheet that extends up the barrier railing or curb face and that terminates in the high-side gutter after the sheets have been installed.

Any tears, cuts, or narrow overlaps shall be patched, using a satisfactory adhesive and by placing sections of membrane sheet over the defective area in such a manner that the patch extends at least 6 in. beyond the defect.

(2) Hot Applied Rubberized Asphalt Membranes

Membrane Application

Melting of the rubberized asphalt membrane shall be in accordance with the manufacturer's instructions. The kettle shall be equipped with a suitable agitator and temperature gauges for the kettle.

Sufficient lead time shall be allowed for heating of the rubberized asphalt so that it will be in a fluid state at the time scheduled for application. Caution should be observed that the melting temperature does not exceed the manufacturer's recommendation. When fluid, the material shall be drawn off in suitable containers and poured onto the primed and dried deck surface.

It shall be evenly spread with a special spray nozzle or silicone squeegees at a uniform rate to yield a coating at a minimum thickness of ⅛ in. and an average of $^{3}/_{16}$ in. All horizontal surfaces shall be completely covered and vertical surfaces (curbing, edging, etc.) shall be covered up to 4 in. above the deck surface.

Any defects shall be repaired in accordance with the manufacturer's recommendations prior to HMA pavement overlayment.

Immediately following the application of the hot applied rubberized asphalt membrane and before it cools, the protective covering shall be laid parallel to the roadway centerline covering the entire area of membrane waterproofing.

D. Repairs.

If an area of membrane requires repair or if the membrane becomes damaged, a patch repair shall be carried out to restore the integrity of the membrane waterproofing system. The damaged area shall be cut back to sound materials to a width of at least 6 in. beyond the periphery of the damaged area, removing contaminants. The concrete shall be primed as necessary followed by the application of the membrane. A continuous layer shall be obtained over the concrete with a 6-in. overlap onto the existing membrane. The solvent shall be as approved by the membrane waterproofing manufacturer. Repairs shall comply with the manufacturer's guidelines.

Where the membrane is to be joined to existing cured material and at joints, the new application shall overlap the existing membrane/joint by at least 4 in. The existing membrane/joint shall be cleaned of all contamination including tack coat material or dirt to an edge distance of a least 6 in.

If pin holes or holidays are observed in the membrane surface they shall be repaired in accordance with the manufacturer's instructions.

E. Applying Tack Coat.

Tack coat, meeting 966.30: General, shall be applied in accordance with the membrane manufacturer's recommendations after a minimum of three hours from initial membrane application. The tack coat application rate shall be in accordance with the manufacturer's recommendation. The application rate of the tack coat shall be set at a rate that achieves the specified residual rate and coverage.

F. HMA Pavement Over Membrane.

Placement of the HMA surface shall be in accordance with Subsection 450: Hot Mix Asphalt Pavement and the contract specifications. To eliminate any possible damage to the membrane and in accordance with 450.50: HMA Pavement on Bridges, the HMA overlayment shall be applied as soon as possible. Caution must be observed to assure that the paver does not cause damage to the membrane. During paving, a light soap spray should be applied to the paving equipment wheels to prevent tack coat pick-up.

966.41: Protection of Exposed Surfaces

The Contractor shall exercise care in the application of the waterproofing membrane system to prevent surfaces not receiving treatment from being spattered or marred, such as the face of curbs, copings, finished surfaces, substructure exposed surfaces, and outside faces of the bridge. Any material that spatters on these surfaces shall be removed and the surfaces cleaned to the satisfaction of the Engineer.

CONTRACTOR QUALITY CONTROL

966.60: General

The Contractor shall provide Quality Control (QC) activities to ensure that their operations will provide waterproofing that conforms to the specified material and workmanship requirements.

966.61: Quality Control Inspection

The Contractor shall perform QC inspection of all work items addressed under this specification. Inspection activities during placement may be performed by qualified production personnel (e.g. Skilled Laborers, Foremen, and Superintendents). The Contractor shall not rely on the results of the Engineer's Acceptance inspection for QC purposes. The Engineer shall be provided the opportunity to monitor and witness all QC inspection.

QC inspection activities must address the following four primary components:

a. Equipment.
b. Materials.
c. Environmental Conditions.
d. Workmanship.

The minimum frequency of QC inspection activity shall be in accordance with the requirements below. The Contractor shall document the results and findings of QC inspection.

A. QC Inspection for Preparation of Underlying Surface.

The Contractor's personnel will perform QC inspection during preparation of the underlying surface in accordance with the requirements of 966.40: Application, Part A. The minimum items to be inspected shall be as outlined in Table 966.61-1.

B. QC Inspection for Placement of Waterproofing Membrane.

The Contractor will perform QC inspection at the site of waterproofing membrane field placement to ensure that the production and placement processes are providing work conforming to the

contract and manufacturer requirements. The minimum items to be inspected for each waterproofing membrane shall be in accordance with the requirements of 966.40: Application, Parts C through F, and as outlined in Table 966.61-1. Inspection shall include:

a. Pin Hole/Holidays: The surface of the membrane shall be inspected for pin holes and/or holidays. All pin hole/holidays shall be located, marked for repair, documented, and repaired in accordance with a repair procedure approved by the manufacturer.
b. Visual inspections shall be conducted throughout the application process. The Contractor shall take progress photos for incorporation with the final review report to the Engineer.

Table 966.61-1: Minimum QC Inspection of Waterproofing Membrane Operations

Inspection Component	Inspection Attribute	Minimum Inspection Frequency	Point of Inspection	Inspection Method
Equipment	As specified by Contractor	As specified by Contractor	As specified by Contractor	As specified by Contractor
Materials	Primer (Correct Type)	1 per Day	As specified by Contractor	Check Manufacturer COC
	Membrane (Correct Type)	1 per Day	As specified by Contractor	Check Manufacturer COC
	Tack Coat (Correct Type)	1 per Day	Per QC Plan	Check Manufacturer COC
Environmental Conditions	Temperature of Air & Underlying Surface	1 per Day	At Project Site	Check Measurement
	Underlying Surface (Soundness)	Entire Surface	Underlying Surface	Visual Check
	Surface (Standing Moisture)	Entire Surface	Underlying Surface & Membrane Surface	Visual Check
	Surface (Cleanliness)	Entire Surface	Underlying Surface & Membrane Surface	Visual Check
Workmanship	Pin Hole/Holidays	Entire Surface	Membrane Surface	Visual Check
	Membrane Coverage Rates	Entire Surface	From Distributor	Visual Check
	Tack Coat Application Rate	1 per Day	From Distributor	Check Measurement

DEPARTMENT ACCEPTANCE

966.70: General

The Department is responsible for performing all Acceptance activities and making the final Acceptance determination for each membrane waterproofing surface. The Department's

Acceptance system will include monitoring the Contractor's QC activity and performing Acceptance inspection in order to determine the quality and corresponding payment.

966.71: Acceptance Inspection

The Engineer will perform Acceptance inspection of all work items addressed under Subsection 966: Membrane Waterproofing for Bridge Deck Repairs to ensure that materials and completed work are in conformance with the contract requirements. Acceptance inspection is intended to visually assess the quality of the materials and work and will address only the inspection components of Materials and Workmanship in support of the Department's final Acceptance determination.

All Acceptance inspection activities by the Department will be performed independent of the Contractor's QC inspection.

Table 966.61-1: Minimum QC Inspection of Waterproofing Membrane Operations

Inspection Component	Inspection Attribute	Minimum Inspection Frequency	Point of Inspection	Inspection Method
Materials	Primer (Correct Type)	1 Per Day	At Placement Site	Check Manufacturer COC
	Membrane (Correct Type)	1 Per Day	At Placement Site	Check Manufacturer COC
	Tack Coat (Correct Type)	1 Per Day	At Placement Site	Check Manufacturer COC
Workmanship	Pin Hole/Holidays	Entire Surface	Membrane Surface	Visual Check
	Membrane Coverage Rates	Entire Surface	At Placement Site	Visual Check
	Tack Coat Application Rate	1 per day	At Placement Site	Check Measurement

966.72: Acceptance Determination

The Engineer's Acceptance inspection results will be used in the final Acceptance determination. Prior to final Acceptance, the Engineer will periodically evaluate all Acceptance inspection information for the prepared underlying surface and the waterproofing membrane. The materials and product workmanship for the completed work will be evaluated for conformance with the plans and the requirements specified in 966.40: Application and 966.41: Protection of Exposed Surfaces.

When the Acceptance information identifies deficiencies in either material quality or product workmanship for any underlying surface location or waterproofing membrane, the location will be isolated and further evaluated by the Engineer through additional Acceptance inspection. Depending upon the findings of the additional Acceptance inspection activity, the Engineer will determine the disposition of the nonconforming work in accordance with Subsection 5.03: Conformity with Plans and Specifications.

The final review and visual inspection shall be conducted jointly by the Contractor and Engineer. Irregularities or other items that do not meet the requirements of the specifications and plans shall be addressed/repaired at this time, at no additional cost to the Department.

After the work is complete, including any corrective action, the Engineer will perform a final evaluation of all Acceptance data and Contractor QC data. The Engineer will accept the work if the Engineer's evaluation of all inspection data is in conformance with this specification and the contract documents.

COMPENSATION

966.80: Method of Measurement

Membrane waterproofing for bridge deck repairs will be measured by the square foot of surface covered with no allowance for overlapping or for edges turned up or carried into recesses for seals, except that the area of the full membrane turned down in back of the backwalls and extended under and in back of curb or edging will be included for payment.

966.81: Basis of Payment

The membrane waterproofing will be paid for at the contract unit price per square foot under the item for Membrane Waterproofing for Bridge Deck Repairs, complete in place. Tack coat shall be paid under item 452. Tack Coat.

966.82: Payment Items

966. Membrane Waterproofing for Bridge Deck Repairs.....Square Foot

SUBSECTION 970: DAMP-PROOFING

DESCRIPTION

970.20: General

Damp-proofing to be applied as shown on the plans shall consist of a primer and damp-proofing material. If material other than that specified herein is permitted to be used, the method of application shall conform to the published specifications of the manufacturer.

MATERIALS

970.30: General

Materials shall meet the requirements specified in the following Subsections of Division III, Materials.

Primer.....M9.09.1
Damp-proofing.....M9.09.2

CONSTRUCTION METHODS

970.40: General

Concrete surfaces shall be allowed to dry for a period of at least 5 days after the removal of forms before damp-proofing is applied.

Surfaces to be damp-proofed shall be made reasonably smooth and free from all projections and holes. All holes in concrete surfaces shall be satisfactorily filled with 1 part cement to 2 parts sand mortar before damp-proofing is applied. Concrete surfaces shall be properly cured before being damp-proofed. Surfaces shall be dry and immediately before the application of the damp-proofing shall be thoroughly cleaned of dust and all loose material. Damp-proofing shall not be done during wet, damp, or foggy weather, or when the ambient temperature is 40°F or below or is forecast to fall below 40°F during the application period. The temperature of the concrete surface shall also exceed the dew point by at least 5°F.

One coat of primer shall be uniformly applied to the surface in accordance with the manufacturer's recommendation. The material for damp-proofing shall be mopped or sprayed on the designated surfaces in two coats. Application methods, rates, temperature constraints shall be as recommended by the manufacturer.

The initial coat of damp-proofing shall be allowed to dry thoroughly before a second coat is applied. The final coat shall be thoroughly dry before any fill is placed against it.

CONTRACTOR QUALITY CONTROL

970.60: General

The Contractor shall provide Quality Control (QC) activities to ensure that their operations will provide damp-proofing that conforms to the specified material and workmanship requirements.

970.61: Damp-proofing Materials and Workmanship

The Contractor shall verify that they are using the correct damp-proofing materials as specified under 970.30: General. All damp-proofing operations shall exhibit satisfactory workmanship including ensuring a dry, smooth, and clean concrete surface which is cured properly, as well as correct application of the primer and damp-proofing.

COMPENSATION

970.80: Method of Measurement

Damp-proofing will be measured by the actual area of surface covered in square foot.

970.81: Basis of Payment

Damp-proofing will be paid for at the contract unit price per square foot of surface and shall include the primer and all materials, equipment and labor to install the damp-proofing complete in place.

970.82: Payment Items

970. Damp-Proofing.....Square Foot

SUBSECTION 971: ASPHALTIC BRIDGE JOINT SYSTEM

DESCRIPTION

971.20: General

The work shall include the furnishing and installation of a polymeric binder and aggregate system composed of specially blended, polymer modified asphalt and selected aggregate, placed into a prepared joint blockout as shown on the plans. The system shall provide a flexible waterproof bridge joint capable of accommodating a total movement of up to 2 in. from maximum expansion to maximum contraction, and maintain a continuous load bearing surface. Incidental to this system shall be the placement of the non-sag joint sealer and backing rod through the safety curb and sidewalk deck joint as shown on the plans.

MATERIALS

971.40: General

Materials shall meet the requirements specified in the following Subsections of Division III, Materials:

Polyurethane Joint Sealer, Non-Sag M9.14.4
Asphaltic Binder for Asphaltic Bridge Joint System M9.17.0
Aggregate for Asphaltic Bridge Joint System M9.17.1
Backer Rod M9.17.2
Bridge Plate for Asphaltic Bridge Joint System M9.17.3

CONSTRUCTION METHODS

971.60: General

A qualified employee of the manufacturer or an installer certified by the manufacturer and approved by the Department shall be at the job site prior to the beginning of the joint construction process to instruct the work crews in proper joint construction procedures and shall remain on the job site for the duration of the joint installation.

The minimum ambient air temperature during installation shall be 40°F and rising.

The Contractor shall produce uniform and parallel surfaces in the forming and placement of the blockout area within the reinforced concrete deck slabs as detailed on the plans. The formed blockout area shall be protected by the Contractor to prevent any edge damage by any site equipment throughout the ongoing construction process.

The Contractor shall produce the required gap width within the full depth of the joint as dimensioned on the plans. If the existing curb stones bridge the existing sidewalk and safety curb joint gaps, they shall be modified by saw cutting a smooth face which shall be aligned and placed to maintain the uniform joint gap.

Immediately prior to placing any binder, the blocked out section and the joint gap shall be inspected full depth and any debris shall be removed. Immediately thereafter the blockout, sidewalk and safety curb gap, and road surface 6 in. either side of the blockout shall be thoroughly

cleaned and dried using a hot compressed air (H.C.A.) lance capable of producing flame-retarded air stream at a temperature of at least 2,000°F. The lance's blast orifice shall be capable of producing 150 psi of pressure.

The backer rod shall be installed in the sidewalk and safety curb gap to the proper depth to ensure a correct width/depth ratio as specified by the manufacturer. The backer rod shall be set in accordance with the plans. There will be no splicing of the backer rod at the curb lines.

The binder shall be melted and heated to the application temperature in a double jacketed, hot oil, heat transfer kettle, or as recommended by the manufacturer. The kettle shall be equipped with a continuous agitation system and temperature controls that can accurately maintain the material temperatures.

The binder shall be poured into the joint gap. The binder shall overfill the roadway joint gap to allow the binder to be spread onto the adjacent concrete deck in order to form a bond breaker between the deck and the bridge plate.

For sidewalk, curb, and median joint gaps a non-sag polyurethane joint sealer compatible with the asphaltic binder shall be used.

The bridge plate shall be centered and placed over the entire length of the roadway joint gap. The plate shall be secured by placing locating pins through the pre-drilled holes into the joint gap backer rod. The bridge plate sections shall not overlap.

The horizontal and vertical surfaces of the joint blockout joint shall be coated immediately with hot binder before pouring hot binder over the floor area of the joint. The coating shall be continuous and adhere to the surfaces.

The aggregate shall be heated to a temperature of 300°F to 390°F in a suitable rotating drum blending unit with a heat source attached or by a secure H.C.A. lance to remove moisture. Temperature of the aggregate shall be controlled by a hand held calibrated digital temperature sensor or other means as approved by the Engineer.

The heated aggregate and polymeric binder shall be combined in the blending unit with sufficient binder to thoroughly coat each aggregate individually while avoiding an excess of binder. In no instance shall the amount of the binder added to the blending unit be less than 15% by weight. The binder used for coating is not included in the above percentage.

The coated aggregate shall be placed in the blockout in layers and raked level as recommended by the joint material manufacturer.

The final layer shall be raked level and compacted flush with adjacent deck surface. This layer shall be compacted to the point of refusal with a 1.5-ton to 2.5-ton roller to ensure the proper density and interlocking of the aggregate in the layer.

Immediately following the compaction, the surface of the joint and surrounding road shall be dried and cleaned using the H.C.A. lance.

Sufficient binder shall immediately be spread over the joint and adjacent road surface to fill surface voids and seal the surface stone. The finished joint shall then be dusted with a fine, dry aggregate to prevent tackiness.

QUALITY CONTROL

971.70: General

The Contractor shall have sufficient mixers and personnel at the site to assure continuous and timely installation of the joint.

The Manufacturer shall document and submit the successful performance of their material in a similar Asphaltic Bridge Joint System.

The Installer shall have previously demonstrated the ability to have successfully produced a joint of similar nature and shall provide documentation of a working joint to the Department.

The Contractor shall furnish Certified Test reports, Materials Certificates and Certificates of Compliance for the asphaltic polymeric binder, the aggregate, and the joint sealer. The backer rod and locating pins require Certificates of Compliance.

COMPENSATION

971.80: Method of Measurement

Item 971. Asphaltic Bridge Joint System will be paid for at the contract unit bid price per foot, as measured between curb lines complete in place.

Item 971.1 Asphaltic Bridge Joint System will be paid for at the contract unit bid price per cubic foot. The volume measurement shall consist of the product of (1) the distance between the curbs along the length of the joint times (2) the width of the asphaltic plug joint noted on the plans times (3) the average depth of the installation across the centerline of the joint.

The joint treatment at the safety curb, sidewalk and median shall be considered incidental to the work to be done under these items.

971.81: Basis of Payment

Payment shall be considered full compensation for installation of the Asphaltic Bridge Joint System including all labor, material, equipment, manufacturer's representative and all items incidental to the satisfactory completion of the work.

Removal of existing joints and materials will be paid for under separate Item.

971.82: Payment Items

971. Asphaltic Bridge Joint System.....Foot
971.1 Asphaltic Bridge Joint System.....Cubic Foot

SUBSECTION 972: STRIP SEAL BRIDGE JOINT SYSTEM

DESCRIPTION

972.20: General

The work shall consist of furnishing and installing strip seal bridge joint systems. This system shall consist of structural steel components, bolts, nuts, washers, lock washers, expansion anchors, preformed neoprene seal and lubricant-adhesive, and elastomeric concrete, all combined in the manner required by the Contract Documents so that a fully operational, waterproof system will seal the joint over which it is installed.

MATERIALS

972.40: General

Materials shall meet the requirements specified in the following Subsections of Division III, Materials:

Epoxy-Resin Base Bonding System for Concrete.....M4.05.5
Elastomeric Concrete.....M4.07.0
Structural Steel.....M8.05.0
Steel Extrusions.....M8.05.7
Galvanized Coatings.....M7.10.0
Neoprene Seal.....M9.17.4

CONSTRUCTION METHODS

972.60: General

The joint system shall be installed in strict accordance with the manufacturer's instructions and this Subsection. In the event of a conflict, the more stringent requirement shall rule. A representative of the strip seal joint manufacturer shall be present throughout the installation. The representative shall be fully conversant in all respects with the correct installation methods. The representative shall be responsible to advise both the Engineer and the Contractor, that the proper installation method is being followed.

972.61: Preparation of Surfaces, Handling, and Storage

The preformed recess or blockout that is to receive the joint system shall be air blown or vacuum-cleaned such that all loose or foreign matter is removed prior to installation of the system. The blockout shall be constructed to the dimensions shown on the approved shop drawings. The concrete substrate must be clean (free of dirt, coatings, rust, grease, oil and other contaminants), sound, and durable. New concrete must have been cured for a minimum of 14 days and all laitance removed. Suitable preparation methods include sandblasting, chipping and scarification.

The joint system shall be stored, inspected and handled in accordance with the manufacturers requirements and approved by the Engineer. No material shall be dropped, thrown, or dragged upon the ground. Material shall be kept clean, properly drained and stored on proper supports above the ground. All material shall be adequately shored, braced, or clamped to resist lateral forces that might occur. Permanent distortion of the steel extrusions will be cause for rejection of

material. Galvanizing shall be in accordance with M7.10.0: Galvanized Coatings and 960.64: Galvanizing and shall be done before other coatings are applied.

972.62: Pre-Installation Inspection

Immediately prior to installation, the steel extrusions shall be inspected by the Engineer for proper alignment and anchor effectiveness. No bends or kinks in the steel extrusions shall be allowed, nor shall the straightening of such bends or kinks be allowed. Steel extrusion segments exhibiting bends or kinks shall be removed from the work site and replaced with new steel extrusion segments at the Contractor's expense. Anchorage bars or studs and their welds shall be inspected visually. Any anchorage bars or studs that do not have complete attachment weld shall be replaced.

972.63: Field Preparation

In order for the steel extrusion segments to be installed properly, they must be set at a width that is directly dependent upon the ambient temperature at the start of installation, as shown on the shop drawings. Before casting the elastomeric concrete, the setting dimension shall be adjusted under the direction of the Engineer to correspond to the proper ambient temperature setting as shown on the approved shop drawings. The width setting shall be accomplished through the use of mechanical devices supplied by the strip seal bridge joint system fabricator. After the steel extrusions have been set to their proper line and grade and securely attached to their supports, the mechanical devices shall be removed.

972.64: Field Splicing of Steel Extrusions

If the system is to be installed in sections, the manufacturer will ship the joint with the appropriate ends beveled for field welding in accordance with the field splice detail shown on the approved shop drawings and the approved welding procedure specifications. Once the first joint section is installed and the elastomeric concrete has been cast, the adjacent length shall be field welded.

972.65: Placement and Finishing of Elastomeric Concrete

Prior to the placement of elastomeric concrete in the prepared blockout, the inside bottom faces of the steel extrusions shall be aligned and spaced using the manufacturer’s support devices. The steel extrusions shall not be unsupported or cantilevered into the joint blockout.

Foam backer rod shall be placed inside the seal cavities of the steel extrusions prior to the placement of the elastomeric concrete. The backer rod will remain inside the steel extrusions until such time as the neoprene seal is about to be placed inside the extrusions.

The equipment used for the mixing and placement of the elastomeric concrete shall be supplied by the manufacturer or shall be approved by the manufacturer. The mixing and placement of elastomeric concrete shall be in accordance with the joint manufacturers written instructions. Proper consolidation of the elastomeric concrete shall be achieved around all embedded elements. A minimum clearance of ½ in. between the bottom of the steel extrusions and the concrete substrate shall be consistent throughout the length of the joint ensuring proper flow and consolidation of the elastomeric concrete. Bonding agent must be used as a primer on the properly prepared joint blockout prior to the installation of the elastomeric concrete. The aggregate component and the liquid component of the elastomeric concrete shall be thoroughly mixed until

all aggregate is completely coated (approximately 1 minute). This mix shall then be poured into the properly prepared blockout.

972.66: Installation of Neoprene Seal

The neoprene seals shall be field installed in continuous lengths spanning the entire roadway width. The neoprene seal shall be prefabricated in the shop to the final dimensions of the joint. Field splices or repairs of the neoprene seal shall not be permitted. To ensure proper fit of the seal and increase the ease of installation, dirt, spatter or standing water shall be removed from the steel extrusion using a brush, scraper or compressed air. Prior to installation, the neoprene strip seal lugs shall be thoroughly coated with a lubricant-adhesive that is approved and supplied by the strip seal joint manufacturer.

972.67: Watertight Integrity Test

At least five workdays after the joint system has been fully installed, the Contractor shall test the entire (full length) joint system for watertight integrity to the satisfaction of the Engineer. The entire joint system shall be covered with water, either ponded or flowing, for a minimum duration of 15 minutes. The concrete surfaces under the joint shall be inspected, during this 15 minute period and also for a minimum of 45 minutes after the supply of water has stopped, for any evidence of dripping water or moisture. Water tightness shall be interpreted to be no dripping water on any surface on the underside of the joint.

Should the joint system exhibit any evidence of water leakage, the Contractor shall locate the place(s) of leakage and take all measures necessary to stop the leakage. All methods proposed by the Contractor to stop the leakage shall be approved by the Engineer. This work shall be done at the Contractor's expense. A subsequent water integrity test shall be performed subject to the same conditions and consequences as the original test.

COMPENSATION

972.80: Method of Measurement

Item 972. Strip Seal Bridge Joint System will be paid for at the contract unit price per foot, as measured along the joint centerline between curb lines complete in place.

The additional plates, angles, and all related hardware required at the safety curb, sidewalk and median shall be considered incidental to the work to be done under this item.

972.81: Basis of Payment

Payment shall be considered full compensation for installation and testing of the Strip Seal Bridge Joint System including all labor, material, equipment, manufacturer’s representative and all items incidental to the satisfactory completion of the work.

Removal of existing joints and materials will be paid for under a separate Item.

972.82: Payment Items

972. Strip Seal Bridge Joint System .....Foot

SUBSECTION 975: METAL BRIDGE RAILINGS, PROTECTIVE SCREENS AND SNOW FENCES

DESCRIPTION

975.20: General

Work under this item shall consist of furnishing and erecting metal bridge railing, protective screens, and snow fences in accordance with the plans and specifications.

MATERIALS

975.40: General

Materials shall meet the requirements specified in the following Subsections of Division III, Materials:

Paint and Protective Coatings	M7
Anodized Coatings	M7.20.0
Powder Coatings	M7.25.0
Bridge Railing, Aluminum	M8.13.0
Aluminum Handrail and Protective Screen Type I and Type II	M8.13.3
Bridge Railing, Steel, Type S3-TL4	M8.13.1
Molded Fabric Bearing Pad	M9.16.2

The Contractor will be required to submit specifications showing the chemical and physical analyses to the Department for approval.

CONSTRUCTION METHODS

975.60: Shop Drawings

The Contractor shall furnish the Engineer with complete detail or shop drawings of the proposed work in accordance with the requirements of Subsection 5.02: Plans and Detail Drawings. No material for the bridge railings, protective screens, and snow fences shall be fabricated before the approval of the detail or shop drawings by the Engineer.

975.61: Fabrication

Fabrication of the Metal members can only be performed by fabricators who are approved by the Department as specified in 960.61: Design, Fabrication and Erection. All steel, except for the pickets and the anchor plates shall be blast cleaned prior to fabrication in accordance with 960.61: Design, Fabrication and Erection, Paragraph C. The blast cleaning shall conform to Steel Structures Painting Council Surface Preparation Specification "Near White Blast Cleaning," SSPC-SP10. Aluminum components shall be cleaned of any foreign matter. In assembly and during welding, the component parts of built up members shall be held by sufficient clamps or by other adequate means to keep parts straight and in close contact.

Welding and fabrication of steel shall conform to the AASHTO Standard Specifications for Highway Bridges and the ANSI/AASHTO/AWS D1.5 Bridge Welding Code. If the members are tubular sections, the fabrication and welding shall conform to the ANSI/AWS D1.1 Structural Welding Code-

Steel. Welding and fabrication of aluminum shall conform to AASHTO and the ANSI/AWS D1.2 Structural Welding Code-Aluminum.

After welding aluminum members, all exposed joints in the rail or cap plate elements shall be finished by grinding or filing to produce a neat appearance. All welding of aluminum members shall be completed prior to anodizing.

Prior to galvanizing, the fabricator shall ensure that all rail and rail components are smooth and without sharp protrusions that would present an injury hazard to pedestrians. Any drain holes necessary to ensure safe galvanizing shall be drilled by the fabricator.

975.62: Setting Railing and Protective Screens

Anchor bolts for Type II Protective Screen and Aluminum Handrail shall be tightened ⅓ turn past snug-tight conditions. Anchor bolt nuts for the S3-TL4 steel bridge railing shall be tightened ⅛ turn past snug-tight conditions and shall have between $^{3}/_{16}$ in. and ⅜ in. of exposed thread after tightening.

A. Aluminum.

The three-rail aluminum railing, Protective Screen Type II posts, and snow fence posts shall be set plumb except in those locations where roadway grade is less than 1.50% in which case they shall be set normal to the grade. Handrail posts shall be set to normal grade. Longitudinal members shall follow the grade of the coping. During the erection of the railing, protective screens, and snow fence, care shall be taken to ensure proper grade and alignment in order to prevent springing or bending of the railing, protective screens, and snow fence during erection. Where required on curves, the rails shall be accurately formed to the required radius.

Protective Screen Type I and Type II components and snow fence components shall be carefully adjusted prior to fixing in place to ensure proper matching or interlocking at abutting joints, and correct alignment and camber throughout their length. Holes for field connections to be drilled in the field shall be drilled with the screen railing in place in the structure at the proper grade and alignment. Field welding of aluminum components shall not be allowed.

Base plates shall be set on ⅛-in. thick molded fabric bearing pads. If additional shimming of the base plates is required, the shims shall be made from fully annealed aluminum alloy sheets or plates.

The anchor cages for Protective Screen Type II, Snow Fence, and Aluminum Handrails shall be accurately set as shown on the drawings. The ferrules shall have a plastic cap in the bottom to act as a seal and shall have a temporary bolt installed while the concrete is being placed. Caps shall be installed in the tops of the ferrules if the temporary bolts are removed prior to erecting the posts. Protective Screen Type I posts shall be attached with extruded aluminum clamps to the steel tabs on the back of the steel bridge railing posts.

B. Steel.

The post shall be set plumb except in those locations where the roadway grade is less than 1.50% in which case they shall be set normal to the grade. The rails shall follow the profile grade of the bridge at the vertical dimensions shown on the plans. When the bridge is on a vertical curve, the

bridge rail shall be shop cambered to follow the profile grade of the bridge. The rails may follow chords for shallow curves if the deviation at the post from the theoretical curve is ±½ in. or less.

Care shall be taken for bridge railing layouts with both horizontal and vertical curves or angles. Field bending of the tube sections will not be allowed.

Base plates shall be set on ⅛-in. thick molded fabric bearing pads. If additional shimming of the base plates is required, the shims shall be of the same material as the base plates. The edges of the base plates shall be caulked to make a watertight joint.

975.63: Galvanizing

The galvanizing bath for structural components, excluding hardware, shall contain nickel (0.05% to 0.09% by weight).

Galvanized members requiring shop assembly shall be welded and drilled prior to galvanizing. The fabricator shall ensure that all welds are cleaned thoroughly in accordance with the AASHTO/AWS Bridge Welding Code and AASHTO M 111M/M 111 and shall have a suitable surface to accept the galvanizing.

All bolts, screws, nuts and washers shall be hot dipped galvanized in accordance with AASHTO M 232M/M 232 or mechanically galvanized in accordance with ASTM B695. The screws may be electroplate galvanized.

The posts, base plates, rails, pickets, angles and splice tubes shall be galvanized after fabrication in accordance with AASHTO M 111M/M 111.

975.64: Painting

Aluminum bridge railing shall not be painted.

Galvanized hardware need not be shop painted; however, any part of the bolts, screws, nuts and washers that are accessible after installation shall be painted in the field in accordance with 975.65: Touch-up and Repairs.

Prior to painting, the galvanizer shall ensure that all rails and rail components are smooth and have a suitable surface for accepting the paint. All runs shall be removed by grinding.

The galvanized surface shall be prepared for painting by one of the following methods.

Method 1: The two-coat paint system shall be applied within 12 hours of galvanizing. The surface shall be blast cleaned immediately before painting (maximum of 8 hours) in accordance with requirements of SSPC SP7 “Brush-Off Blast Cleaning” or other method producing equivalent results and uniform profile, to achieve a 1.0 to 1.5 mil anchor profile as indicated by Keane Tator Surface Profile Comparator or similar device. All detrimental material, i.e., dirt, grease, other foreign matter, shall be removed prior to blasting.

Method 2: The two-coat paint system shall be applied within 15 days of galvanizing. In preparation for the two-coat painting system, the surface shall be blast cleaned in accordance with the requirements of SSPC SP7 “Brush-Off Blast Cleaning,” or other method producing equivalent results and uniform profile, to achieve a 1.0 to 1.5 mil anchor profile as indicated by a Keane Tator Profile Comparator or similar device. All detrimental material such as oil, grease, dirt, other foreign matter,

shall be removed prior to blast cleaning. The blast cleaning shall be performed prior to the formation of "white rust" on the galvanized surface. If "white rust" is detected, the steel shall be stripped and re-galvanized in accordance with these specifications.

The preparation shall be followed by a pretreatment of zinc or iron phosphate. The phosphate shall be applied to the blast cleaned material within eight hours of blast cleaning. Phosphating shall be applied in accordance with the manufacturer's recommendations. The material shall be painted within twelve hours of phosphating. The applicator shall submit the procedure for phosphating to the Engineer for approval prior to performing the work.

The phosphating applicator shall maintain a record of in-process quality checks on the solutions.

The prime coat material shall be a polyamide epoxy applied to a minimum dry film thickness of 3.0 mils and force cured as given below for the finish coat.

The finish coat material shall be a two component, catalyzed aliphatic urethane applied by airless spray to a minimum dry film thickness of 3.0 mils.

The color and the corresponding Color Number as found in Federal Standard 595B, "Colors Used in Government Procurement," shall be stated on the Plans. The fabricator shall submit to the Engineer for approval, paint chips of the intended color prior to any work being done under this heading.

All finish coat material shall be applied under conditions within the following tolerances:

Air Temperature: ..... 50°F to 90°F
Surface Temperature: ..... 50°F to 90°F
Humidity ..... 65% maximum

The finish coat shall be cured in a booth maintained at 150°F for 2 to 4 hours.

Should the coating system fail within one year after the project has been accepted, the damaged coating shall be repaired by the Contractor at no cost to the Department. The method of repair shall be acceptable to the Department.

975.65: Touch-up and Repairs

Should any damage occur to the coating during shipping or handling at the job site, the contractor shall repair and touchup any damaged areas to the satisfaction of the Engineer and the following:

Touch-up of the galvanizing before the finish coat is applied shall be accomplished by applying a galvanizing repair paint in accordance with M7.04.11. The dry film thickness of the applied repair paint shall not be less than 3.0 mils. Applications shall be in accordance with the Manufacturer's instructions.

Field touch-up procedures shall conform to the recommendations of the company that performed the initial painting. Touch-up of the finish coat shall be by applying a coating of a two-part urethane, as supplied by the company that performed the initial painting, to achieve a dry film thickness of at least 3.0 mils. Prior to the application of the paint, remove all damaged coatings down to a solidly adhered coating and apply galvanizing repair paint as a primer. Allow the primer to dry for at least four hours.

The Contractor shall also use the touch-up paint material to paint the galvanized hardware used in the field erection of the railing that has not been finish coated previously.

All paint used for touch-up and repair shall be the same manufacturer's brand and lot number as was used in the shop.

The Contractor shall be careful to not damage the anodized aluminum surfaces. Protective Screen Type I and Type II fabric and Snow Fence fabric shall be wrapped to prevent damage during shipment and storage. Touch- up coating shall be applied by spray to the fabric after installation. Touch up of the anodized surface will be at the Contractor's expense and shall be subject to the approval of the Engineer.

975.66: Inspection

Inspection may be done at the mill and or fabricating plant by the Engineer or the Engineer's representative (Verification Inspector). The Contractor shall give 3 business days' notice to the Engineer prior to starting the work so that the Department may arrange for inspection. The contractor shall give the same notice when material is being shipped between the fabricator, galvanizer and painter so that inspection may be arranged. No material shall be shipped to a project until the Verification Inspector affixes their stamp to the material. Material shipped without such stamp shall be rejected and immediately removed from the job site.

COMPENSATION

975.80: Method of Measurement

Metal bridge railings, protective screens, and snow fence shall be measured by the foot from end to end of the top rail. Curved portions shall be measured along the centerline of the top rail.

975.81: Basis of Payment

Metal bridge railing, protective screens, and snow fence shall be paid for at the contract unit price per foot under the item of railing, screen, or fence required, complete in place.

975.82: Payment Items

975.1	Metal Bridge Railing (3 Rail), Steel (Type S3-TL4)	Foot
975.2	Metal Bridge Railing (3 Rail), Aluminum (Type AL-3)	Foot
975.3	Protective Screen Type I	Foot
975.4	Protective Screen Type II	Foot
975.5	Aluminum Handrail	Foot
975.6	Snow Fence 3-Foot High	Foot
975.7	Snow Fence 4-Foot High	Foot

SUBSECTION 983: REVETMENT

DESCRIPTION

983.20: General

Revetment shall consist of slope protection of the required type at the location shown on the plans and in accordance with these specifications and in close conformity with the lines and grades shown on the plans or established by the Engineer.

983.21: Classification

A. Dumped Riprap.

This work shall consist of angular shaped stones dumped in place to form a well graded mass with a minimum of voids, in location where damage may be caused by water conditions and below water level as a foundation for slope paving.

B. Riprap.

This work shall consist of a protective covering of angular shaped stones laid on slopes in front of abutments, wingwalls, piers and elsewhere as required, to insure protection of structures and embankments.

C. Slope Paving.

Slope paving shall consist of angular shaped stones, having a reasonably flat face, carefully placed on slopes to insure their protection.

D. Special Slope Paving under Bridges.

This special slope paving is intended for use on slopes under bridges where not in contact with flowing water and shall consist of quarry stone, precast concrete blocks or cement concrete laid on slopes in uniform courses under bridges.

E. Channel Paving and Grouted Channel Paving.

Channel Paving, of the type specified, shall be placed as protective covering along the slopes around culvert inlets or outlets, around foundations, bridge berms and dikes.

F. Modified Rockfill.

This work shall consist of slope protection of ditches and at ends of cross-culverts.

MATERIALS

983.40: General

Materials shall meet the requirements specified in the following Subsections of Division III, Materials:

Dumped Riprap	M2.02.2
Modified Rockfill	M2.02.4
Riprap	M2.02.0
Slope Paving	M2.06.0
Special Slope Paving under Bridge (Quarry Stone)	M2.06.1
Special Slope Paving under Bridge (Precast Concrete Blocks)	M4.05.3
Channel Paving	M2.06.2
4,000 psi, 1.5-inch, 565 Cement Concrete	M4.02.00
Reinforcing Steel	M8.01.0
Preformed Bituminous Joint Filler for Concrete	M3.05.5
Hot Applied Crack Sealer	M3.05.2
Crushed Stone for Drainage Foundation	M2.01.1
Mortar	M4.02.15

CONSTRUCTION METHODS

983.60: General

Areas to be protected by revetment shall be free of brush, trees, stumps and other organic material and be dressed to a smooth surface. All soft or spongy material shall be removed to the depth shown on the plans or as directed by the Engineer and replaced with approved materials.

A toe trench as shown on the plans shall be dug and maintained until the revetment is placed.

Protection for structure foundations shall be provided as early as the foundation construction permits. The area to be protected shall be cleaned of waste materials and the surface to be protected prepared as shown on the plans.

Where shown on the plans a foundation shall be placed on the area before the stone is placed. The foundation will be specified as either gravel borrow or crushed stone and at least 12 in. in thickness.

983.61: Dumped Riprap

Stone for riprap shall be placed on the prepared slope or area in a manner which will produce a reasonably well graded mass of stone with the minimum practicable percentage of voids and minimum thickness of 2 ft. Riprap protection shall be placed to its full course thickness at one operation and in such a manner as to avoid displacing the underlying material. Placing of riprap protection in layers or by dumping into chutes or by similar methods likely to cause segregation will not be permitted.

The larger stones shall be well distributed, and the entire mass of stone shall conform approximately to the gradation specified in M2.02.2: Dumped Riprap. All material going into riprap

protection shall be so placed and distributed that there will be no large accumulations of either the larger or smaller sizes of stone.

It is the intent of these specifications to produce a fairly compact riprap protection in which all sizes of material are placed in their proper proportions. Hand placing or rearranging of individual stones by mechanical equipment may be required to the extent necessary to secure the results specified.

The riprap protection shall be placed in conjunction with the construction of the embankment with only sufficient lag in construction of the riprap protection as may be necessary to allow for proper construction of the portion of the embankment protected and to prevent mixture of embankment and riprap material.

In no case will the elevation of the embankment be greater than 5 ft above the elevation of the riprap material.

983.62: Riprap

The stones shall be placed upon an approved bed of gravel, crushed stone or other acceptable material, to the lines and grades shown on the plans and as directed.

Each stone shall be carefully placed by hand or machine, on a prepared bed, normal to the slope and firmly bedded thereon.

The larger stones shall be placed closely together and the intervening spaces filled with smaller stones in such a manner that the entire surface will form a compact mass.

983.63: Slope Paving

The stones shall be placed upon an approved bed of gravel, crushed stone or other acceptable material, to the lines and grades shown on the plans and as directed. The larger stones shall be placed closely together throughout the surface and the interstices carefully chinked with smaller stones. All stones shall be securely bedded, with the exposed surfaces approximately parallel to and within 6 in. of the slope shown on the plans. When the paving cannot be laid to the required line and grade below water, a suitable foundation of dumped riprap shall be constructed.

983.64: Special Slope Paving Under Bridges

A. General.

This type of slope paving shall consist of either quarry stone, precast concrete blocks or cement concrete and shall be firmly bedded on a 6-in. gravel foundation. The finished paving shall have a continuous surface of uniform appearance, approximately parallel to and within 3 in. of the slope shown on the plans.

B. Quarry Stone or Precast Concrete Blocks.

The paving shall be laid in uniform courses with broken joints not exceeding 2 in. in width. The joints shall then be filled with sand or fine gravelly material to within 2 in. of the paved surface. Cement mortar (M4.02.15: Cement Mortar) shall then be placed in the joints to the top of the paved surface.

C. Cement Concrete.

The paving shall be placed as specified in Subsection 901: Cement Concrete; the surface shall be finished as specified in 901.68: Joints, Paragraph C.

983.65: Channel Paving and Grouted Channel Paving

All stones shall be placed upon an approved bed to the lines and grades shown on the plans and as directed. The larger stones shall be placed as closely together as poss1ble throughout the surface. All stones shall be securely bedded and laid so that the exposed surfaces will be approximately parallel to and within 3 in. of the grade shown on the plans. The finished paving shall present a continuous uniform surface of stonework.

Grouting, when required, shall be done after the paving is completely in place. The paving stones shall be sprinkled with water immediately before placing the grout. The grout shall conform to M4.02.15: Cement Mortar.

983.66: Modified Rockfill

Stone shall be placed on the prepared area in a manner which will produce a reasonably well graded mass with a minimum practical percentage of voids and a minimum thickness of 1 ft. The stone will be placed to its full thickness in one operation and in such a manner as to avoid displacing the underlying material.

It is the intent of these specifications to produce a fairly compact Rockfill protection in which all sizes of material are placed in their proper proportions.

Hand-placing or rearranging of individual stones by mechanical equipment may be required to the extent necessary to secure the results specified.

Modified Rockfill shall be placed in conjunction with the adjacent construction as shown on the plans.

COMPENSATION

983.80: Method of Measurement

The quantity of Dumped Riprap, Riprap and Modified Rockfill shall be the weight of the stones.

Slope Paving, Special Slope Paving under Bridges, Channel Paving and Grouted Channel Paving will be measured in place by the square yard on the surface of the paved slope as constructed.

983.81: Basis of Payment

No deduction from the excavation pay quantities will be made for stone taken from excavation and used in any type of revetment, provided that any additional filling material made necessary by such use shall be furnished as specified in Subsection 4.09: Rights In the Use of Materials Found on the Work.

Excavation below the original ground surface at the toe of slopes when required in the construction of revetment will be paid for under the item for Class A Trench Excavation, but where the excavation is made along the slopes of an existing or proposed channel, such excavation will be paid for under the Item for Channel Excavation.

Excavation in cuts when required in the construction of revetment, will be paid for at the contract unit price per cubic yard under the Item of Earth Excavation or Bridge Excavation, whichever is applicable.

Gravel Borrow required in the construction of revetment will be paid for under the contract unit price per cubic yard for Item 151. Gravel Borrow, complete in place.

Crushed stone when required for foundation revetment will be paid for at the contract unit price per ton for Crushed Stone for Drainage Foundations.

The tonnage of Dumped Riprap, Riprap and Modified Rockfill will be paid for at the contract unit price per ton for the kind of stone required, complete in place.

Slope Paving, Special Slope Paving under Bridges, Channel Paving and Grouted Channel Paving will be paid at the contract unit price per square yard, complete in place.

983.82: Payment Items

983.	Dumped Riprap	Ton
983.1	Riprap	Ton
984.	Stone and Stone Chips for Waterway Revetments, Groins, Jetties Breakwaters and Mounds	Ton
985.	Slope Paving	Square Yard
986.	Modified Rockfill	Ton
987.	Special Slope Paving under Bridge – Option	Square Yard
987.1	Special Slope Paving under Bridge – Quarry Stone	Square Yard
987.12	Special Slope Paving under Bridge – Quarry Stone (Grouted)	Square Yard
987.2	Special Slope Paving under Bridge – Precast Concrete Blocks	Square Yard
987.3	Special Slope Paving under Bridge – Cement Concrete	Square Yard
988.	Channel Paving	Square Yard
988.1	Grouted Channel Paving	Square Yard

SUBSECTION 995: BRIDGE STRUCTURE

DESCRIPTION

995.20: General

Work included in this section shall consist of constructing bridge structures in accordance with the designs and to the lines and grades shown on the plans, and in accordance with these specifications complete in place including the furnishing and installation of all materials that are part of the structures. The work also includes approach slabs, wing walls and retaining walls when specified.

The work under this section does not include the various classes of excavation, hot mix asphalt pavement, any work on piles, backfill, revetments, temporary structure, removal of present superstructure, cofferdams, control of water, or other items noted in the contract.

MATERIALS

995.40: General

The materials to be used shall be in accordance with the applicable sections of these specifications and/or the Special Provisions for each respective item included in the construction of the structure.

CONSTRUCTION METHODS

995.60: General

The method of construction shall be in accordance with the applicable sections of these specifications and the Special Provisions for each respective item.

COMPENSATION

995.81: Basis of Payment

The above work will be paid for at the contract lump sum price under the respective item of "Bridge Structures." Where more than one structure is included in the Contract the following provisions shall apply to each structure. The schedule is for the purpose of estimating partial payments, and it shall not affect the contract terms in any way.

Except as stipulated in the following paragraphs, the payment shall be a lump sum for each bridge structure complete in place. In general, payment will include the full compensation for all concrete (including approach slabs, and all concrete sidewalks adjacent to the wingwalls), prestressed concrete beams and deck beams, steel reinforcement for structures, structural steel, shear connectors, bituminous damp-proofing, membrane waterproofing, protective course, curbing, edging, scuppers, drains, bridge railings, concrete penetrant sealer, and incidental work such as flashings, waterstops, fillers, tile under sidewalk; brickwork at parapet walls, crushed stone for weep holes, fastenings, painting and other materials, equipment and labor that are indicated or implied as part of the construction for the bridge structure. Payment for each bridge structure includes all work indicated on the plans under one bridge number even though two or more structures may be included under one bridge number, due to a wide center reservation or some other physical feature. Walls, other than wingwalls or connecting walls between the structures, will not be included for payment under an item for Bridge Structure.

When the Engineer orders changes from the contract plans of a bridge structure, the cost of such changes will be negotiated based on the provisions of Subsection 4.03: Extra Work and Subsection 9.03: Payment for Extra Work.

Where more than one structure is included in the contract under separate items, the foregoing paragraphs apply to each structure separately, and only to the structure for which changes are ordered.

Placing concrete on the deck in excess of that shown on the plans, to compensate for camber of structural steel, will not be considered a change from the plans. Full compensation for the additional concrete is included in the lump sum bid price.

Basis for Partial Payments.

Within 10 days after Notice to Proceed, the Contractor shall submit, in duplicate, for approval by the Engineer, a schedule of quantities and unit prices for the major components of the respective items for Bridge Structure as listed in the Special Provisions. The approval of the schedule by the Engineer shall not be considered as a guarantee to the Contractor that the quantities shown on the schedule are the approximate quantities actually included in the structure as indicated on the plans. The schedule is only for the purpose of estimating partial payments, and it shall not affect the contract terms in any way.

The volume occupied by the tile under the sidewalk shall be considered as an equivalent volume of cement concrete. Fillers, flashings, brickwork at parapet walls, tar paper, fastenings, painting and other materials and work shall be included with the appropriate components.

The schedule shall list the item, the quantity and the unit of measurement, the Contractor's price per unit, the amount for the item, and the total that the Contractor bid for the lump sum.

Each schedule applies only to the respective bridge structure. Similar materials and constructions at other locations are not included in the schedule.

995.82: Payment Items

995. Bridge Structure Bridge No. ( ).....Lump Sum

SUBSECTION 996: NOISE BARRIER STRUCTURE

DESCRIPTION

996.20: General

Work included in this section shall consist of constructing noise barrier structures in accordance with the plans and these specifications to provide a satisfactory structure, complete in place.

MATERIALS

996.40: General

All structural steel shall be new and in conformance with Subsection 960: Structural Steel and Miscellaneous Metal Products.

Materials shall meet the requirements specified in the following Subsections of Division III, Materials:

Anchor bolts.....M8.01.5
Galvanizing.....M7.10.0
Paint and protective coatings.....M7.
Reinforcement steel.....M8.01.0
Epoxy coating for reinforcing bars.....M8.01.07
4,000 psi, ¾-inch, 565 Cement Concrete.....M4.02.00
Elastomeric bearing pads.....M9.14.5
Joint sealer.....M9.14.4
Backer rod.....M9.17.2

CONSTRUCTION METHODS

996.60: General

The method of construction shall be in accordance with the plans and these specifications.

The Contractor shall submit shop drawings in accordance Subsection 5.02: Plans and Detail Drawings. The shop drawings shall include all pertinent dimensions, reinforcing steel, pick points and precasting details.

The Contractor shall submit an erection procedure in accordance with 960.61: Design, Fabrication and Erection.

All open excavations shall be suitably covered or filled in to the satisfaction of the Engineer at the end of the shift.

996.61: Weep Holes

Weep holes, if required, shall be located as shown on the plans or as directed by the Engineer. They shall be located to avoid reinforcing steel. The Contractor shall propose a method for locating rebar that is satisfactory to the Engineer.

The weep holes shall be cored in a manner which results in a smooth bore hole and which does not break or chip either panel surface at the edge of the hole.

COMPENSATION

996.80: Method of Measurement

The Noise Barrier Structure shall be measured by the square foot, one face. The length of each wall section shall be measured centerline of post to centerline of post. The height of each wall panel shall be measured vertically from the bottom of the lowest panel to the top of the wall panel.

Noise Barrier Foundations shall be measured vertically by the foot, from the bottom of the shaft to the top of the concrete.

Weep Holes for Noise Barrier Structure shall be measured by each hole installed.

996.81: Basis of Payment

The above work will be paid for at the contract unit price under the respective item of Noise Barrier Structure, Noise Barrier Foundation, and Weep Hole for Noise Barrier Structure.

Payment for Noise Barrier Structure shall include all panels including coloring, surfacing and anti-graffiti protection application, post assemblies including galvanizing and painting, signs, access doorways, hand holes, bearing pads, caulking, hardware, brick, plates, nuts, washers, temporary post supports, grout and mortar, and any and all incidental work necessary to construct the structure complete in place.

Payment for Noise Barrier Foundation shall include all earth support, water control, grouting of pre-cast foundations concrete, reinforcing steel, anchor bolts, and any and all incidental work necessary to construct the foundations complete in place and ready to accept the posts.

Payment for Weep holes for Noise Barrier Structure will be made at the contract unit price each, complete in place.

Payment for excavation, test pits, crushed stone, geotextile fabric and clearing and grubbing shall be made under the respective items.

996.82: Payment Items

945.101	Drilled Shaft Excavation 3.0 Foot Diameter	Foot
945.201	Rock Socket Excavation 3.0 Foot Diameter	Foot
945.301	Obstruction Excavation 3.0 Foot Diameter	Foot
996.1	Noise Barrier Structure Square	Foot
996.11	Noise Barrier Foundation	Foot
996.2	Weep Hole for Noise Barrier Structure	Each

Appendix F – Diesel Retrofit Program

CERTIFICATION OF CONSTRUCTION EQUIPMENT STANDARD COMPLIANCE FORM

Contract Number: _____

Description: _____

Location (City/Town): _____

I, _____ authorized signatory for _____ whose principal place of business is at _____ do hereby certify that any and all large non-road (greater than 50 brake horsepower) diesel construction equipment (DCE) to be used in this contract meets the EPA particulate matter (PM) Tier emission standards in effect for non-road diesel engines for the applicable engine power group or has emission control devices such as, oxidation catalysts or particulate filters, installed on the exhaust system side of the diesel combustion engine equipment. Said equipment or devices meet the requirements of this specification.

I am submitting on behalf of _____ a list of said diesel construction equipment, labeled "Diesel Retrofit Data" that will be used in connection with this contract. The said list includes, but is not limited to the number of vehicles subject to this certification and the number of vehicles retrofitted by vehicle type. The said list shall also be signed, certifying that the information is correct and accurate as of the date of signature and is signed under pains and penalty of perjury.

I acknowledge that this certificate is being furnished as a requirement under this contract and is subject to applicable State and federal laws, both criminal and civil.

Signature _____ Date _____

Title: _____

Company: _____

DIESEL CONSTRUCTION EQUIPMENT DATA SHEET

Contractor Name: _____ Contract Number: _____

Description: _____

Location (City/Town): _____

Equip. Type	Own/Rent	Equip. Make	Equip. Model & Year	Fuel Type	Equip. VIN	Equip. HP Rating	ECD Type DOC/DPF	ECD Manufact.	ECD Make	ECD Model	ECD Certif.	ECD Installation Date

Appendix G – MGL Chapter 30 Law Sections

CHAPTER 30. GENERAL PROVISIONS RELATIVE TO STATE DEPARTMENTS, COMMISSIONS, OFFICERS AND EMPLOYEES

Chapter 30: Section 39F. Construction contracts; assignment and subrogation; subcontractor defined; enforcement of claim for direct payment; deposit, reduction of disputed amounts

Section 39F. (1) Every contract awarded pursuant to sections forty-four A to L, inclusive, of chapter one hundred and forty-nine shall contain the following subparagraphs (a) through (i) and every contract awarded pursuant to section thirty-nine M of chapter thirty shall contain the following subparagraphs (a) through (h) and in each case those subparagraphs shall be binding between the general contractor and each subcontractor.

(a) Forthwith after the general contractor receives payment on account of a periodic estimate, the general contractor shall pay to each subcontractor the amount paid for the labor performed and the materials furnished by that subcontractor, less any amount specified in any court proceedings barring such payment and also less any amount claimed due from the subcontractor by the general contractor.

(b) Not later than the sixty-fifth day after each subcontractor substantially completes his work in accordance with the plans and specifications, the entire balance due under the subcontract less amounts retained by the awarding authority as the estimated cost of completing the incomplete and unsatisfactory items of work, shall be due the subcontractor; and the awarding authority shall pay that amount to the general contractor. The general contractor shall forthwith pay to the subcontractor the full amount received from the awarding authority less any amount specified in any court proceedings barring such payment and also less any amount claimed due from the subcontractor by the general contractor.

(c) Each payment made by the awarding authority to the general contractor pursuant to subparagraphs (a) and (b) of this paragraph for the labor performed and the materials furnished by a subcontractor shall be made to the general contractor for the account of that subcontractor; and the awarding authority shall take reasonable steps to compel the general contractor to make each such payment to each such subcontractor. If the awarding authority has received a demand for direct payment from a subcontractor for any amount which has already been included in a payment to the general contractor or which is to be included in a payment to the general contractor for payment to the subcontractor as provided in subparagraphs (a) and (b), the awarding authority shall act upon the demand as provided in this section.

(d) If, within seventy days after the subcontractor has substantially completed the subcontract work, the subcontractor has not received from the general contractor the balance due under the subcontract including any amount due for extra labor and materials furnished to the general contractor, less any amount retained by the awarding authority as the estimated cost of completing the incomplete and unsatisfactory items of work, the

subcontractor may demand direct payment of that balance from the awarding authority. The demand shall be by a sworn statement delivered to or sent by certified mail to the awarding authority, and a copy shall be delivered to or sent by certified mail to the general contractor at the same time. The demand shall contain a detailed breakdown of the balance due under the subcontract and also a statement of the status of completion of the subcontract work. Any demand made after substantial completion of the subcontract work shall be valid even if delivered or mailed prior to the seventieth day after the subcontractor has substantially completed the subcontract work. Within ten days after the subcontractor has delivered or so mailed the demand to the awarding authority and delivered or so mailed a copy to the general contractor, the general contractor may reply to the demand. The reply shall be by a sworn statement delivered to or sent by certified mail to the awarding authority and a copy shall be delivered to or sent by certified mail to the subcontractor at the same time. The reply shall contain a detailed breakdown of the balance due under the subcontract including any amount due for extra labor and materials furnished to the general contractor and of the amount due for each claim made by the general contractor against the subcontractor.

(e) Within fifteen days after receipt of the demand by the awarding authority, but in no event prior to the seventieth day after substantial completion of the subcontract work, the awarding authority shall make direct payment to the subcontractor of the balance due under the subcontract including any amount due for extra labor and materials furnished to the general contractor, less any amount (i) retained by the awarding authority as the estimated cost of completing the incomplete or unsatisfactory items of work, (ii) specified in any court proceedings barring such payment, or (iii) disputed by the general contractor in the sworn reply; provided, that the awarding authority shall not deduct from a direct payment any amount as provided in part (iii) if the reply is not sworn to, or for which the sworn reply does not contain the detailed breakdown required by subparagraph (d). The awarding authority shall make further direct payments to the subcontractor forthwith after the removal of the basis for deductions from direct payments made as provided in parts (i) and (ii) of this subparagraph.

(f) The awarding authority shall forthwith deposit the amount deducted from a direct payment as provided in part (iii) of subparagraph (e) in an interest-bearing joint account in the names of the general contractor and the subcontractor in a bank in Massachusetts selected by the awarding authority or agreed upon by the general contractor and the subcontractor and shall notify the general contractor and the subcontractor of the date of the deposit and the bank receiving the deposit. The bank shall pay the amount in the account, including accrued interest, as provided in an agreement between the general contractor and the subcontractor or as determined by decree of a court of competent jurisdiction.

(g) All direct payments and all deductions from demands for direct payments deposited in an interest-bearing account or accounts in a bank pursuant to subparagraph (f) shall be made out of amounts payable to the general contractor at the time of receipt of a demand for direct payment from a subcontractor and out of amounts which later become payable to the general contractor and in the order of receipt of such demands from subcontractors.

All direct payments shall discharge the obligation of the awarding authority to the general contractor to the extent of such payment.

(h) The awarding authority shall deduct from payments to a general contractor amounts which, together with the deposits in interest-bearing accounts pursuant to subparagraph (f), are sufficient to satisfy all unpaid balances of demands for direct payment received from subcontractors. All such amounts shall be earmarked for such direct payments, and the subcontractors shall have a right in such deductions prior to any claims against such amounts by creditors of the general contractor.

(i) If the subcontractor does not receive payment as provided in subparagraph (a) or if the general contractor does not submit a periodic estimate for the value of the labor or materials performed or furnished by the subcontractor and the subcontractor does not receive payment for same when due less the deductions provided for in subparagraph (a), the subcontractor may demand direct payment by following the procedure in subparagraph (d) and the general contractor may file a sworn reply as provided in that same subparagraph. A demand made after the first day of the month following that for which the subcontractor performed or furnished the labor and materials for which the subcontractor seeks payment shall be valid even if delivered or mailed prior to the time payment was due on a periodic estimate from the general contractor. Thereafter the awarding authority shall proceed as provided in subparagraph (e), (f), (g) and (h).

(2) Any assignment by a subcontractor of the rights under this section to a surety company furnishing a bond under the provisions of section twenty-nine of chapter one hundred forty-nine shall be invalid. The assignment and subrogation rights of the surety to amounts included in a demand for direct payment which are in the possession of the awarding authority or which are on deposit pursuant to subparagraph (f) of paragraph (1) shall be subordinate to the rights of all subcontractors who are entitled to be paid under this section and who have not been paid in full.

(3) “Subcontractor” as used in this section (i) for contracts awarded as provided in sections forty-four A to forty-four H, inclusive, of chapter one hundred forty-nine shall mean a person who files a sub-bid and receives a subcontract as a result of that filed sub-bid or who is approved by the awarding authority in writing as a person performing labor or both performing labor and furnishing materials pursuant to a contract with the general contractor, (ii) for contracts awarded as provided in paragraph (a) of section thirty-nine M of chapter thirty shall mean a person approved by the awarding authority in writing as a person performing labor or both performing labor and furnishing materials pursuant to a contract with the general contractor, and (iii) for contracts with the commonwealth not awarded as provided in forty-four A to forty-four H, inclusive, of chapter one hundred forty-nine shall also mean a person contracting with the general contractor to supply materials used or employed in a public works project for a price in excess of five thousand dollars.

(4) A general contractor or a subcontractor shall enforce a claim to any portion of the amount of a demand for direct payment deposited as provided in subparagraph (f) of

paragraph 1 by a petition in equity in the superior court against the other and the bank shall not be a necessary party. A subcontractor shall enforce a claim for direct payment or a right to require a deposit as provided in subparagraph (f) of paragraph 1 by a petition in equity in the superior court against the awarding authority and the general contractor shall not be a necessary party. Upon motion of any party the court shall advance for speedy trial any petition filed as provided in this paragraph. Sections fifty-nine and fifty-nine B of chapter two hundred thirty-one shall apply to such petitions. The court shall enter an interlocutory decree upon which execution shall issue for any part of a claim found due pursuant to sections fifty-nine and fifty-nine B and, upon motion of any party, shall advance for speedy trial the petition to collect the remainder of the claim. Any party aggrieved by such interlocutory decree shall have the right to appeal therefrom as from a final decree. The court shall not consolidate for trial the petition of any subcontractor with the petition of one or more subcontractors or the same general contract unless the court finds that a substantial portion of the evidence of the same events during the course of construction (other than the fact that the claims sought to be consolidated arise under the same general contract) is applicable to the petitions sought to be consolidated and that such consolidation will prevent unnecessary duplication of evidence. A decree in any such proceeding shall not include interest on the disputed amount deposited in excess of the interest earned for the period of any such deposit. No person except a subcontractor filing a demand for direct payment for which no funds due the general contractor are available for direct payment shall have a right to file a petition in court of equity against the awarding authority claiming a demand for direct payment is premature and such subcontractor must file the petition before the awarding authority has made a direct payment to the subcontractor and has made a deposit of the disputed portion as provided in part (iii) of subparagraph (e) and in subparagraph (f) of paragraph (1).

(5) In any petition to collect any claim for which a subcontractor has filed a demand for direct payment the court shall, upon motion of the general contractor, reduce by the amount of any deposit of a disputed amount by the awarding authority as provided in part (iii) of subparagraph (e) and in subparagraph (f) of paragraph (1) any amount held under a trustee writ or pursuant to a restraining order or injunction.

Chapter 30: Section 39K. Public building construction contracts; payments

Section 39K. Every contract for the construction, reconstruction, alteration, remodeling, repair or demolition of any public building by the commonwealth, or by any county, city, town, district, board, commission or other public body, when the amount is more than five thousand dollars in the case of the commonwealth and more than two thousand dollars in the case of any county, city, town, district, board, commission or other public body, shall contain the following paragraph:— Within fifteen days (30 days in the case of the commonwealth, including local housing authorities) after receipt from the contractor, at the place designated by the awarding authority if such a place is so designated, of a periodic estimate requesting payment of the amount due for the preceding month, the awarding authority will make a periodic payment to the contractor for the work

performed during the preceding month and for the materials not incorporated in the work but delivered and suitably stored at the site (or at some location agreed upon in writing) to which the contractor has title or to which a subcontractor has title and has authorized the contractor to transfer title to the awarding authority, upon certification by the contractor that he is the lawful owner and that the materials are free from all encumbrances, but less (1) a retention based on its estimate of the fair value of its claims against the contractor and less (2) a retention for direct payments to subcontractors based on demands for same in accordance with the provisions of section thirty-nine F, and less (3) a retention not exceeding five per cent of the approved amount of the periodic payment. After the receipt of a periodic estimate requesting final payment and within sixty-five days after (a) the contractor fully completes the work or substantially completes the work so that the value of the work remaining to be done is, in the estimate of the awarding authority, less than one per cent of the original contract price, or (b) the contractor substantially completes the work and the awarding authority takes possession for occupancy, whichever occurs first, the awarding authority shall pay the contractor the entire balance due on the contract less (1) a retention based on its estimate of the fair value of its claims against the contractor and of the cost of completing the incomplete and unsatisfactory items of work and less (2) a retention for direct payments to subcontractors based on demands for same in accordance with the provisions of section thirty-nine F, or based on the record of payments by the contractor to the subcontractors under this contract if such record of payment indicates that the contractor has not paid subcontractors as provided in section thirty-nine F. If the awarding authority fails to make payment as herein provided, there shall be added to each such payment daily interest at the rate of three percentage points above the rediscount rate than charged by the Federal Reserve Bank of Boston commencing on the first day after said payment is due and continuing until the payment is delivered or mailed to the contractor; provided, that no interest shall be due, in any event, on the amount due on a periodic estimate for final payment until fifteen days (twenty-four days in the case of the commonwealth) after receipt of such a periodic estimate from the contractor, at the place designated by the awarding authority if such a place is so designated. The contractor agrees to pay to each subcontractor a portion of any such interest paid in accordance with the amount due each subcontractor.

The awarding authority may make changes in any periodic estimate submitted by the contractor and the payment due on said periodic estimate shall be computed in accordance with the changes so made, but such changes or any requirement for a corrected periodic estimate shall not affect the due date for the periodic payment or the date for the commencement of interest charges on the amount of the periodic payment computed in accordance with the changes made, as provided herein; provided, that the awarding authority may, within seven days after receipt, return to the contractor for correction, any periodic estimate which is not in the required form or which contains computations not arithmetically correct and, in that event, the date of receipt of such periodic estimate shall be the date of receipt of the corrected periodic estimate in proper form and with arithmetically correct computations. The date of receipt of a periodic estimate received on a Saturday shall be the first working day thereafter. The provisions of section thirty-nine G shall not apply to any contract for the construction,

reconstruction, alteration, remodeling, repair or demolition of any public building to which this section applies.

All periodic estimates shall be submitted to the awarding authority, or to its designee as set forth in writing to the contractor, and the date of receipt by the awarding authority or its designee shall be marked on the estimate. All periodic estimates shall contain a separate item for each filed subtrade and each sub-subtrade listed in sub-bid form as required by specifications and a column listing the amount paid to each subcontractor and sub-subcontractor as of the date the periodic estimate is filed. The person making payment for the awarding authority shall add the daily interest provided for herein to each payment for each day beyond the due date based on the date of receipt marked on the estimate.

A certificate of the architect to the effect that the contractor has fully or substantially completed the work shall, subject to the provisions of section thirty-nine J, be conclusive for the purposes of this section.

Notwithstanding the provisions of this section, at any time after the value of the work remaining to be done is, in the estimation of the awarding authority, less than 1 per cent of the adjusted contract price, or the awarding authority has determined that the contractor has substantially completed the work and the awarding authority has taken possession for occupancy, the awarding authority may send to the general contractor by certified mail, return receipt requested, a complete and final list of all incomplete and unsatisfactory work items, including, for each item on the list, a good faith estimate of the fair and reasonable cost of completing such item. The general contractor shall then complete all such work items within 30 days of receipt of such list or before the contract completion date, whichever is later. If the general contractor fails to complete all incomplete and unsatisfactory work items within 45 days after receipt of such items furnished by the awarding authority or before the contract completion date, whichever is later, subsequent to an additional 14 days' written notice to the general contractor by certified mail, return receipt requested, the awarding authority may terminate the contract and complete the incomplete and unsatisfactory work items and charge the cost of same to the general contractor and such termination shall be without prejudice to any other rights or remedies the awarding authority may have under the contract. The awarding authority shall note any such termination in the evaluation form to be filed by the awarding authority pursuant to the provisions of section 44D of chapter 149.

Chapter 30: Section 39N. Construction contracts; equitable adjustment in contract price for differing subsurface or latent physical conditions

Section 39N. Every contract subject to section forty-four A of chapter one hundred and forty-nine or subject to section thirty-nine M of chapter thirty shall contain the following paragraph in its entirety and an awarding authority may adopt reasonable rules or

regulations in conformity with that paragraph concerning the filing, investigation and settlement of such claims:

If, during the progress of the work, the contractor or the awarding authority discovers that the actual subsurface or latent physical conditions encountered at the site differ substantially or materially from those shown on the plans or indicated in the contract documents either the contractor or the contracting authority may request an equitable adjustment in the contract price of the contract applying to work affected by the differing site conditions. A request for such an adjustment shall be in writing and shall be delivered by the party making such claim to the other party as soon as possible after such conditions are discovered. Upon receipt of such a claim from a contractor, or upon its own initiative, the contracting authority shall make an investigation of such physical conditions, and, if they differ substantially or materially from those shown on the plans or indicated in the contract documents or from those ordinarily encountered and generally recognized as inherent in work of the character provided for in the plans and contract documents and are of such a nature as to cause an increase or decrease in the cost of performance of the work or a change in the construction methods required for the performance of the work which results in an increase or decrease in the cost of the work, the contracting authority shall make an equitable adjustment in the contract price and the contract shall be modified in writing accordingly.

Chapter 30: Section 39O. Contracts for construction and materials; suspension, delay or interruption due to order of awarding authority; adjustment in contract price; written claim

Section 39O. Every contract subject to the provisions of section thirty-nine M of this chapter or subject to section forty-four A of chapter one hundred forty-nine shall contain the following provisions (a) and (b) in their entirety and, in the event a suspension, delay, interruption or failure to act of the awarding authority increases the cost of performance to any subcontractor, that subcontractor shall have the same rights against the general contractor for payment for an increase in the cost of his performance as provisions (a) and (b) give the general contractor against the awarding authority, but nothing in provisions (a) and (b) shall in any way change, modify or alter any other rights which the general contractor or the subcontractor may have against each other.

(a) The awarding authority may order the general contractor in writing to suspend, delay, or interrupt all or any part of the work for such period of time as it may determine to be appropriate for the convenience of the awarding authority; provided however, that if there is a suspension, delay or interruption for fifteen days or more or due to a failure of the awarding authority to act within the time specified in this contract, the awarding authority shall make an adjustment in the contract price for any increase in the cost of performance of this contract but shall not include any profit to the general contractor on such increase; and provided further, that the awarding authority shall not make any adjustment in the contract price under this provision for any suspension, delay, interruption or failure to act

to the extent that such is due to any cause for which this contract provides for an equitable adjustment of the contract price under any other contract provisions.

(b) The general contractor must submit the amount of a claim under provision (a) to the awarding authority in writing as soon as practicable after the end of the suspension, delay, interruption or failure to act and, in any event, not later than the date of final payment under this contract and, except for costs due to a suspension order, the awarding authority shall not approve any costs in the claim incurred more than twenty days before the general contractor notified the awarding authority in writing of the act or failure to act involved in the claim.

SITE PLANS FOR

INFRASTRUCTURE IMPROVEMENTS CRANBERRY HIGHWAY AND COUNTY ROAD EXTENSION

ROCHESTER, MA 02770

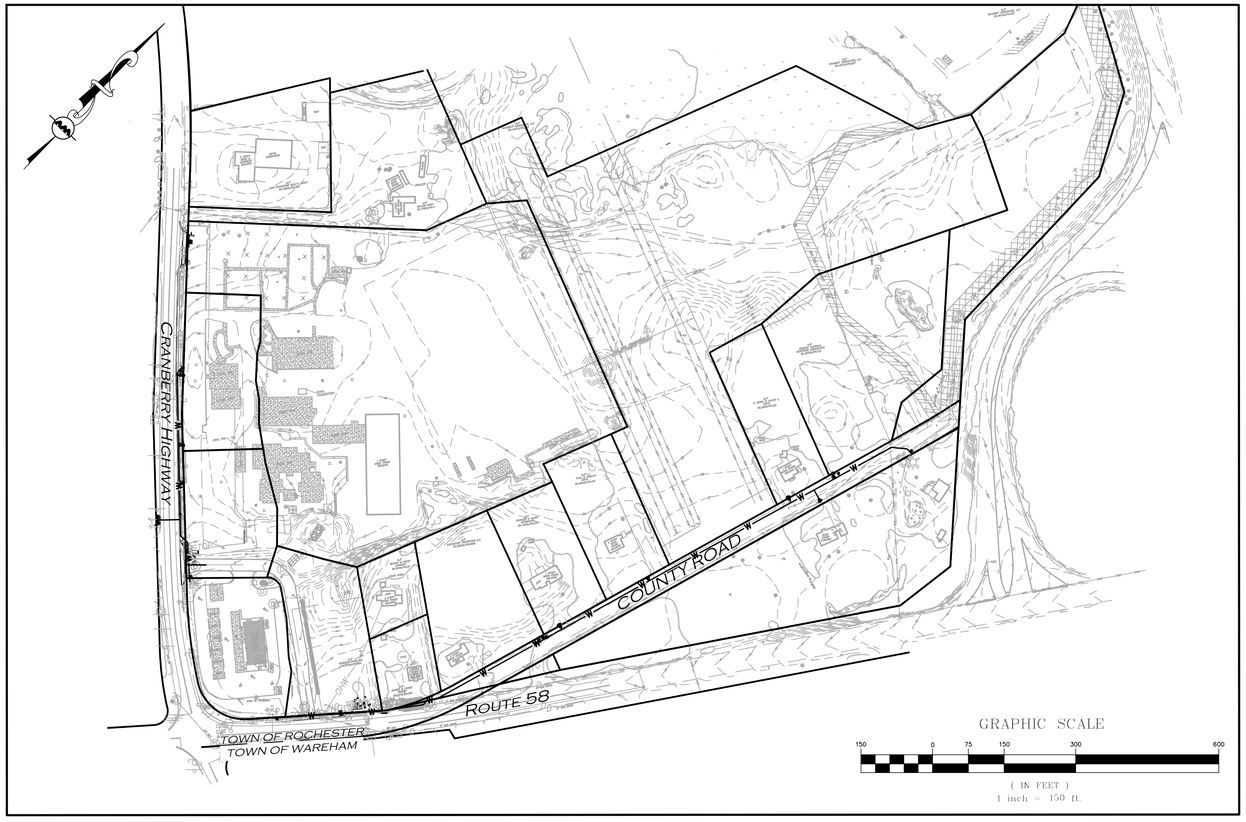

APPLICANT:
TOWN OF ROCHESTER
1 CONSTITUTION WAY
ROCHESTER, MA 02770

SITE ENGINEER/SURVEYOR:
ALLEN & MAJOR ASSOCIATES, INC.
10 MAIN ST
LAKEVILLE, MA 02347

ALLEN & MAJOR ASSOCIATES, INC.

LIST OF DRAWINGS

DRAWING TITLE	SHEET NO.	ISSUED
OVERVIEW	C-1	01-30-2024
EROSION CONTROL & SITE PREP PLAN	C-2	01-30-2024
LAYOUT & MATERIALS PLAN	C-3 - C-4	01-30-2024
GRADING AND DRAINAGE PLAN	C-5	01-30-2024
UTILITIES PLAN	C-6 - C-7	01-30-2024
DETAILS	C-8 - C-9	01-30-2024

PREPARED BY:

ALLEN & MAJOR ASSOCIATES, INC.
civil engineering ◆ land surveying
environmental consulting ◆ landscape architecture
www.allenmajor.com
10 MAIN STREET
LAKEVILLE, MA 02347
TEL: (508) 923-1010
FAX: (508) 923-6309

WOBURN, MA ◆ LAKEVILLE, MA ◆ MANCHESTER, NH

M:\PROJECTS\2518-01\CIVIL\DRAWINGS\CURRENT\MASSWORKS CONSTRUCTION DRAWINGS\C-2518-01_LINEWORK - MASSWORKS.DWG

NOTES

1. APPLICABLE WORK AND MATERIALS SHALL COMPLY WITH ALL MASSDOT REGULATIONS AND ORDINANCES, AND O.S.H.A. STANDARDS. ALL CONSTRUCTION SHALL CONFORM TO THE APPLICABLE REGULATIONS OF MASSDOT SPECIFICATIONS. CONTRACTOR TO NOTIFY DESIGN ENGINEER OF ANY DISCREPANCIES BETWEEN THE PLANS AND TOWN REGULATIONS AND/OR SPECIFICATIONS.
2. THE CONTRACTOR IS SPECIFICALLY CAUTIONED THAT THE LOCATION AND/OR ELEVATION OF EXISTING UTILITIES AND STRUCTURES AS SHOWN ON THESE PLANS IS BASED ON RECORDS OF VARIOUS UTILITY COMPANIES AND WHERE POSSIBLE, MEASUREMENTS TAKEN IN THE FIELD. THIS INFORMATION IS NOT TO BE RELIED ON AS BEING EXACT OR COMPLETE. THE LOCATION OF ALL UNDERGROUND UTILITIES AND STRUCTURES SHALL BE VERIFIED IN THE FIELD BY THE CONTRACTOR PRIOR TO THE START OF CONSTRUCTION. THE CONTRACTOR MUST CONTACT THE APPROPRIATE UTILITY COMPANY, ANY GOVERNING PERMITTING AUTHORITY, AND "CALL BEFORE YOU DIG" AT LEAST 72 HOURS PRIOR TO ANY EXCAVATION WORK TO REQUEST EXACT FIELD LOCATION OF UTILITIES, AND THE ENGINEER SHALL BE NOTIFIED IN WRITING OF ANY UTILITIES INTERFERING WITH THE PROPOSED CONSTRUCTION AND APPROPRIATE REMEDIAL ACTION TO BE TAKEN BEFORE PROCEEDING WITH THE WORK.
3. THE CONTRACTOR SHALL BE RESPONSIBLE FOR ESTABLISHING AND MAINTAINING ALL CONTROL POINTS AND BENCHMARKS NECESSARY FOR THE WORK.
4. THE CONTRACTOR IS RESPONSIBLE FOR OBTAINING AND PAYING FOR ANY PERMITS AND/OR CONNECTION FEES REQUIRED TO CARRY OUT THE WORK INCLUDING BUT NOT LIMITED TO DEMOLITION.
5. IT SHALL BE THE RESPONSIBILITY OF THE CONTRACTOR TO RELOCATE ALL EXISTING UTILITIES WHICH CONFLICT WITH THE PROPOSED IMPROVEMENTS SHOWN ON THE PLAN. THE CONTRACTOR SHALL PROTECT AND/OR CAP OFF ALL EXISTING ON-SITE UTILITY SERVICES DESIGNATED ON THESE DRAWINGS. SERVICES SHALL BE CAPPED OFF WHERE SAME ENTER THE PERIMETER OF THE PROPERTY LINE.
6. ALL DIMENSIONS AND RADII ARE TO THE FACE OF CURB UNLESS OTHERWISE NOTED. ALL CURBING MATERIAL SHALL BE AS NOTED WITH A 6" REVEAL UNLESS OTHERWISE NOTED.
7. SYMBOLS AND ABBREVIATIONS BASED ON THE STANDARD PLAN SYMBOLS AND LEGEND BY THE MASSACHUSETTS DEPARTMENT OF TRANSPORTATION.
8. INSTALLATION OF ALL MAINS, VALVES, HYDRANTS AND SERVICES SHALL BE IN ACCORDANCE WITH THE LATEST PUBLISHED WFD SPECIFICATIONS AND RATE SCHEDULES.
9. FIRE HYDRANTS SHALL BE PAINTED IN ACCORDANCE WITH THE WFD COLOR SCHEME.
10. CONTRACTOR SHALL FURNISH AND INSTALL ALL FITTINGS SHOWN ON THE PLANS INCLUDING, BUT NOT LIMITED TO, FITTINGS NECESSARY TO MAINTAIN A 5' DEPTH OF BURY OVER THE WATER LINE.
11. ALL AREAS OF SAWCUT SHALL BE FURNISHED TO PRE-EXISTING CONDITIONS AFTER TRENCHING FOR WATER LINE (ASPHALT, GRAVEL, ETC.) WITH THICKNESS TO MATCH EXISTING.

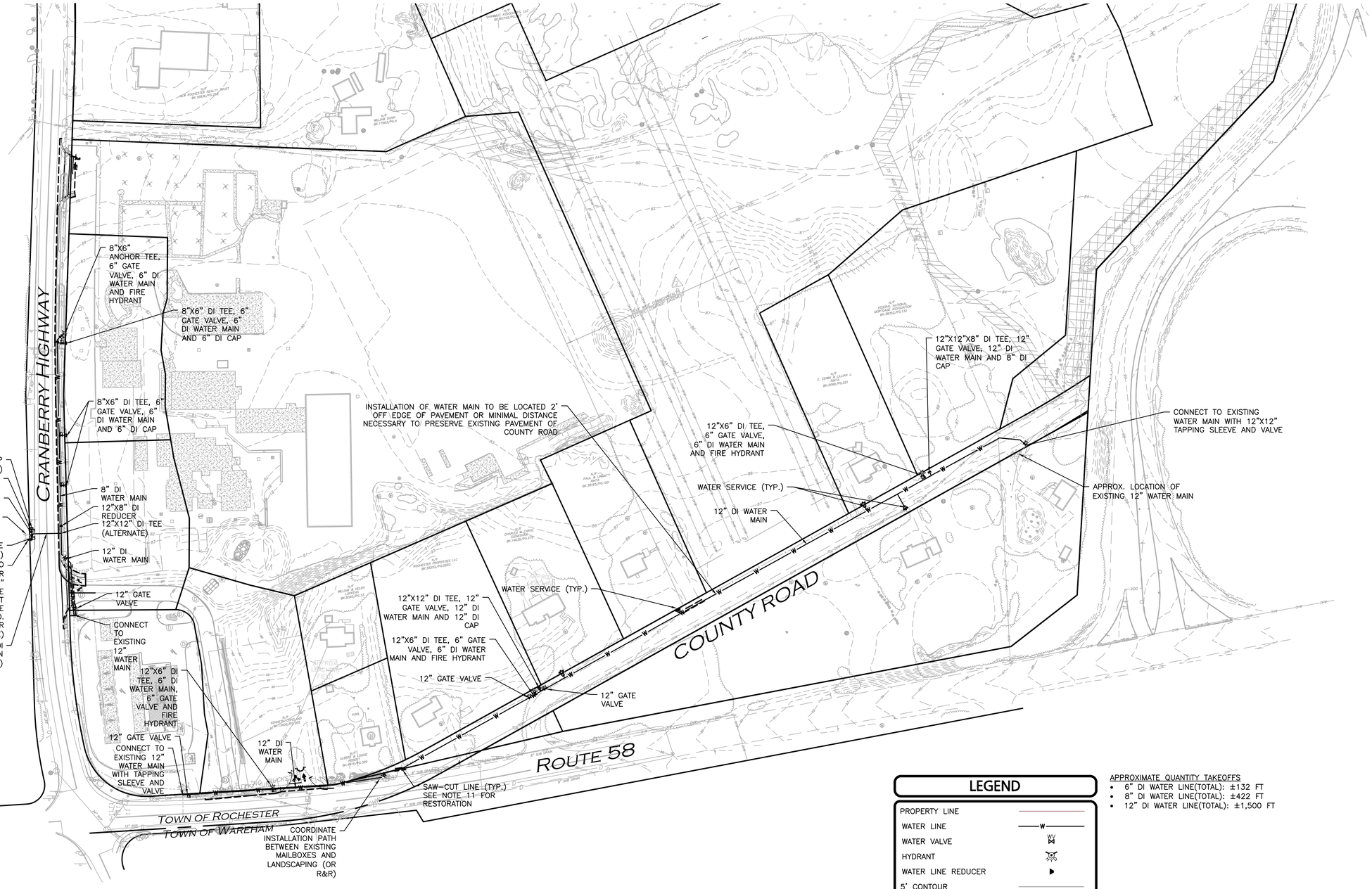

LEGEND

PROPERTY LINE	
WATER LINE	W
WATER VALVE	WV
HYDRANT	
WATER LINE REDUCER	▶
5' CONTOUR	
1' CONTOUR	
TREE LINE	

APPROXIMATE QUANTITY TAKEOFFS

- 6" DI WATER LINE(TOTAL): ±132 FT
- 8" DI WATER LINE(TOTAL): ±422 FT
- 12" DI WATER LINE(TOTAL): ±1,500 FT

GRAPHIC SCALE

80 0 40 80 160 320

(IN FEET)
1 inch = 80 ft.

ISSUED FOR REVIEW

01-30-2024

PROFESSIONAL ENGINEER FOR
ALLEN & MAJOR ASSOCIATES, INC.

REV	DATE	DESCRIPTION

APPLICANT\OWNER:

TOWN OF ROCHESTER
1 CONSTITUTION WAY
ROCHESTER, MA 02770

PROJECT: INFRASTRUCTURE IMPROVEMENTS CRANBERRY HIGHWAY AND COUNTY ROAD EXTENSION
ROCHESTER, MA

PROJECT NO.	2518-01	DATE:	01-30-2024
SCALE:	1" = 80'	DWG. NAME:	C2518-01_
DESIGNED BY:	JS/PLC	CHECKED BY:	PLC

PREPARED BY:

ALLEN & MAJOR ASSOCIATES, INC.
civil engineering ◆ land surveying
environmental consulting ◆ landscape architecture
www.allenmajor.com
10 MAIN STREET
LAKEVILLE MA 02347
TEL: (508) 923-1010
FAX: (508) 923-6309

WOBURN, MA ◆ LAKEVILLE, MA ◆ MANCHESTER, NH

DRAWING TITLE: OVERVIEW PLAN

SHEET No. C-1

M:\PROJECTS\2518-01\CIVIL\DRAWINGS\CURRENT\MASSWORKS CONSTRUCTION DRAWINGS\C-2518-01_LINEWORK - MASSWORKS.DWG

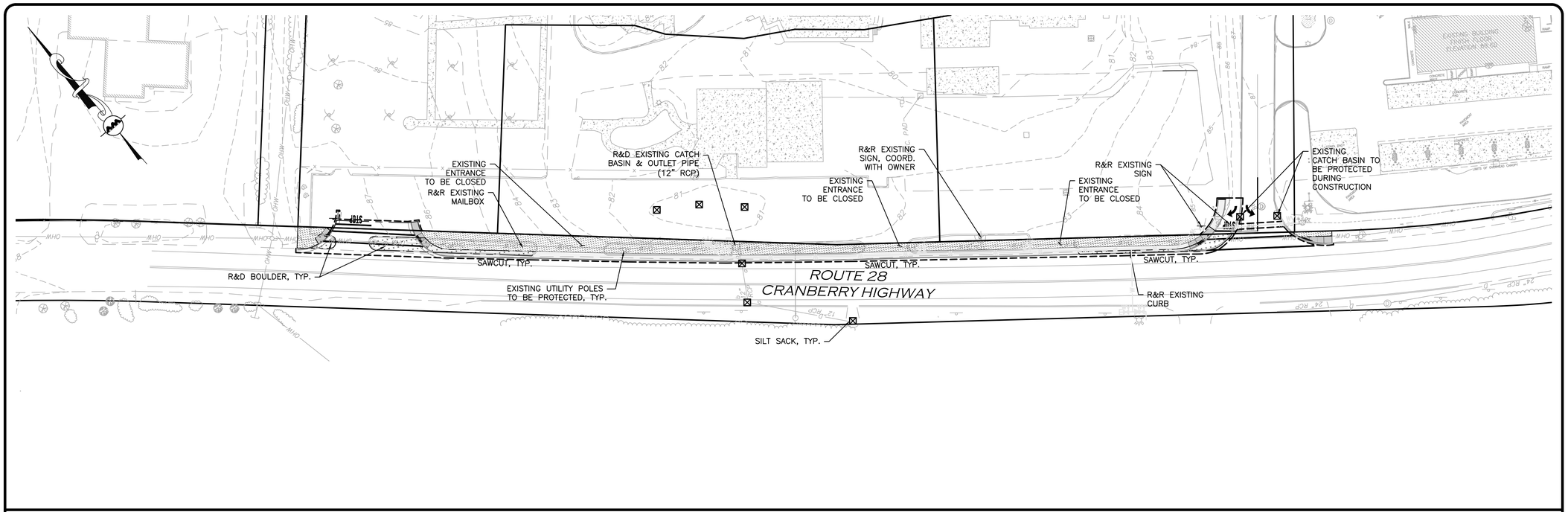

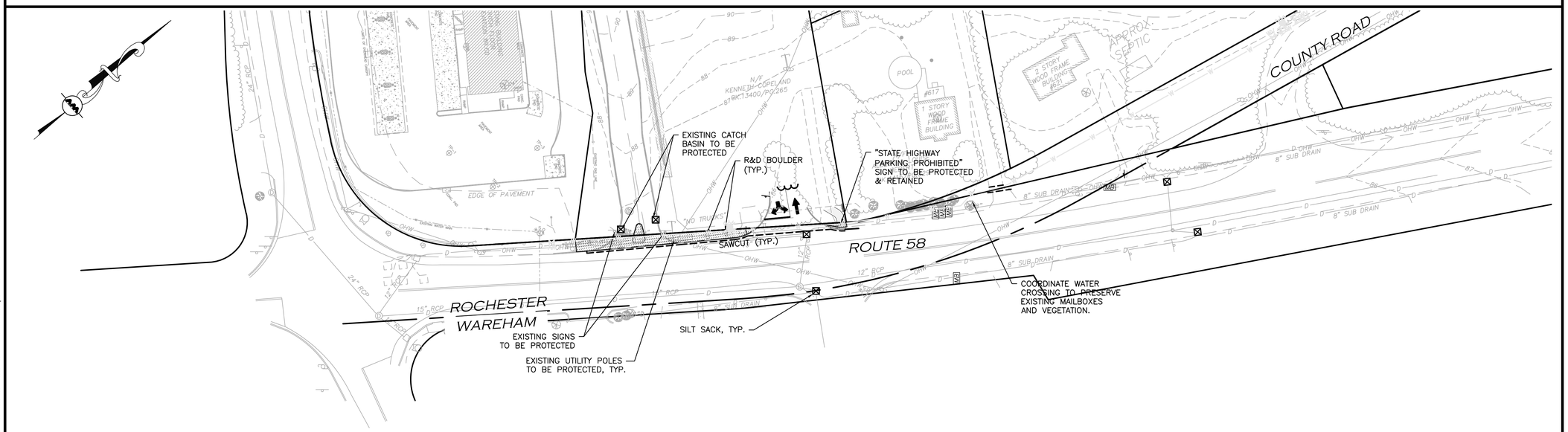

LEGEND:

PROPERTY LINE	
R&D (REMOVE & DISPOSE)	
R&D* (REMOVE & DISPOSE)	
REMOVE & RESET	R&R
CATCH BASIN FILTER	⊠
SAW-CUT LINE	

NOTES:

1. ALL BOULDERS EXISTING WITHIN STATE HIGHWAY LAYOUT TO BE REMOVED AND DISPOSED.
2. R&D* AREAS TO RECEIVE LOAM BORROW AND SEED TO RESTORE DISTURBED AREAS.
3. ROUTE 58 CURB CUT IS TO BE DONE IN 2 PHASES TO ENSURE CONTINUED ACCESS TO SEASONS CORNER MARKET. EXISTING ENTRANCE SHALL REMAIN OPERATIONAL DURING PHASE 1 AS PROPOSED ENTRANCE IS BUILT. PROPOSED ENTRANCE BECOMES OPERATIONAL IN PHASE 2 AS EXISTING ENTRANCE IS CLOSED.

GRAPHIC SCALE

20 0 10 20 40 80

(IN FEET)
1 inch = 20 ft.

DIG SAFE

BEFORE YOU DIG
CALL 811 OR
1-888-DIG-SAFE
1-888-344-7233

M:\PROJECTS\2518-01\CIVIL\DRAWINGS\CURRENT\MASSWORKS CONSTRUCTION DRAWINGS\C-2518-01_LINEWORK - MASSWORKS.DWG

ISSUED FOR REVIEW

01-30-2024

PROFESSIONAL ENGINEER FOR
ALLEN & MAJOR ASSOCIATES, INC.

REV	DATE	DESCRIPTION

APPLICANT\OWNER:

TOWN OF ROCHESTER
1 CONSTITUTION WAY
ROCHESTER, MA 02770

PROJECT: INFRASTRUCTURE IMPROVEMENTS CRANBERRY HIGHWAY AND COUNTY ROAD EXTENSION
ROCHESTER, MA

PROJECT NO.	2518-01	DATE:	01-30-2024
SCALE:	1" = 20'	DWG. NAME:	C2518-01_
DESIGNED BY:	JS/PLC	CHECKED BY:	PLC

PREPARED BY:

ALLEN & MAJOR ASSOCIATES, INC.
civil engineering ◆ land surveying
environmental consulting ◆ landscape architecture
www.allenmajor.com
10 MAIN STREET
LAKEVILLE MA 02347
TEL: (508) 923-1010
FAX: (508) 923-6309
WOBURN, MA ◆ LAKEVILLE, MA ◆ MANCHESTER, NH

DRAWING TITLE: EROSION CONTROL & SITE PREP PLAN

SHEET No. C-2

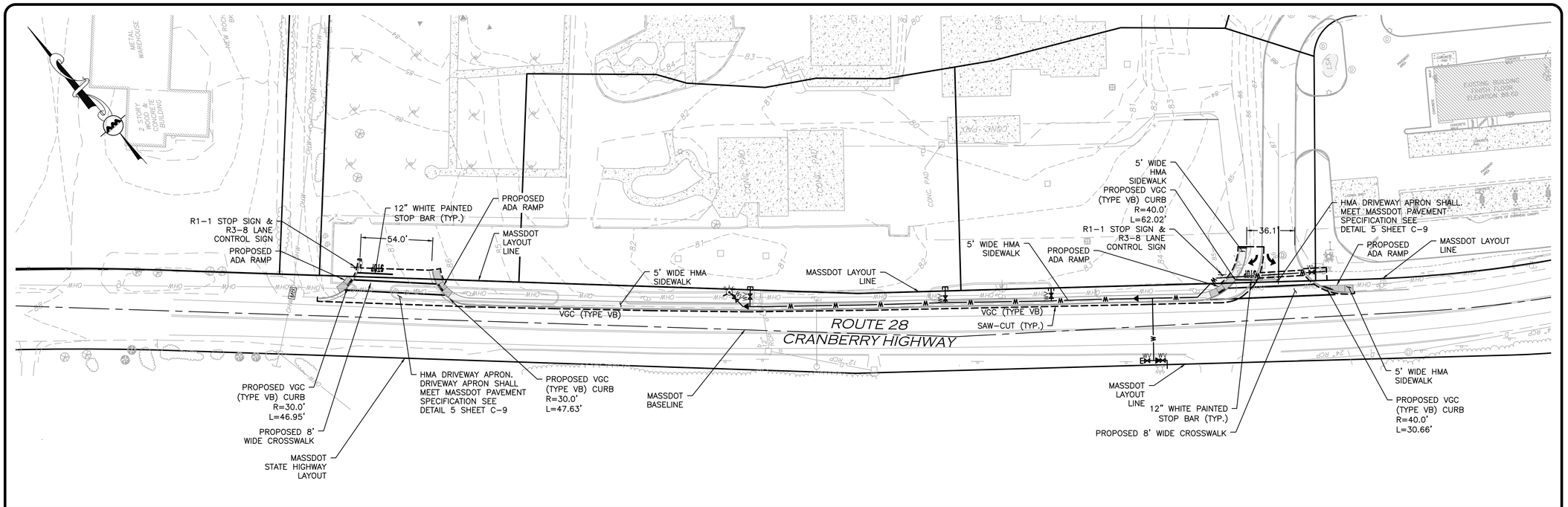

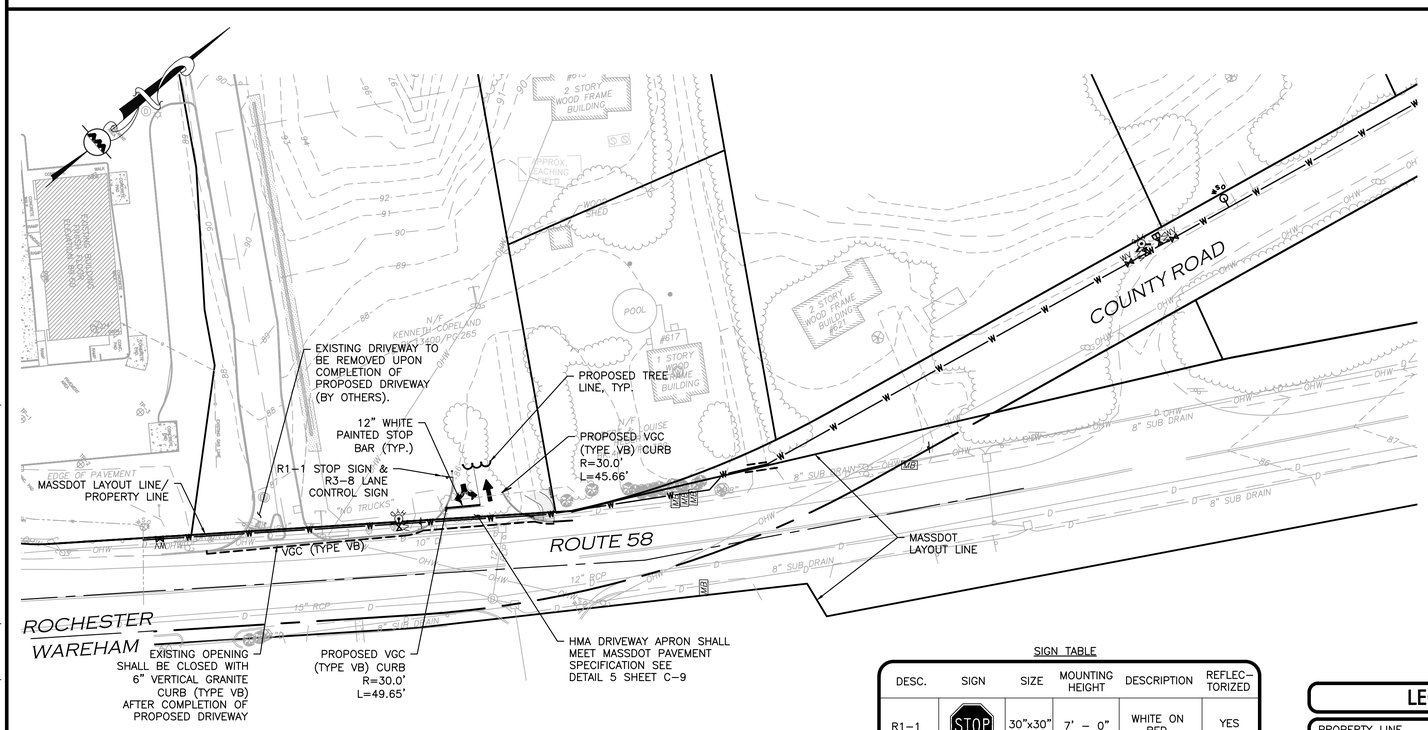

DIG SAFE

BEFORE YOU DIG
CALL 811 OR
1-888-DIG-SAFE
1-888-344-7233

SIGN TABLE

DESC.	SIGN	SIZE	MOUNTING HEIGHT	DESCRIPTION	REFLEC-TORIZED
R1-1	STOP	30"x30"	7' - 0"	WHITE ON RED	YES
R3-8	ONLY ONLY	30"x30"	7' - 0"	BLACK ON WHITE	YES
W11-1		24"x24"	ABOVE W16-1	BLACK ON YELLOW	YES
W16-1	SHARE THE ROAD	18"x24"	4' (MIN.) 5' (MAX.)	BLACK ON YELLOW	YES

TRAFFIC AND SAFETY SIGNAGE SHALL COMPLY WITH MUTCD STANDARDS.

LEGEND:

- PROPERTY LINE
- SIGN
- CURB
- TRAFFIC ARROWS
- SIDEWALK
- ADA ACCESSIBLE RAMP
- ROADWAY STRIPING
- ADA DET. WARNING SURFACE

NOTES:

1. ALL CURBING WITHIN STATE HIGHWAY LAYOUT TO BE GRANITE TYPE VB.
2. ALL SIDEWALKS WITHIN STATE HIGHWAY LAYOUT TO BE HOT MIXED ASPHALT PER DETAIL 7 ON SHEET C-9.
3. ROUTE 58 CURB CUT IS TO BE DONE IN 2 PHASES TO ENSURE CONTINUED ACCESS TO SEASONS CORNER MARKET. EXISTING ENTRANCE SHALL REMAIN OPERATIONAL DURING PHASE 1 AS PROPOSED ENTRANCE IS BUILT. PROPOSED ENTRANCE BECOMES OPERATIONAL IN PHASE 2 AS EXISTING ENTRANCE IS CLOSED.
4. ALL SIDEWALK TERMINUSES SHALL HAVE REBAR #4 PROTRUDING 12" FROM THE END OF THE CONCRETE WHICH SHALL BE BURIED UNDER THE SOIL FOR FUTURE DEVELOPMENT.
5. LOAM AND SEED ALL DISTURBED AREAS UNLESS OTHERWISE NOTED INCLUDING ROAD SHOULDERS.

GRAPHIC SCALE

40 0 20 40 80 160

(IN FEET)
1 inch = 40 ft.

ISSUED FOR REVIEW

01-30-2024

PROFESSIONAL ENGINEER FOR
ALLEN & MAJOR ASSOCIATES, INC.

REV	DATE	DESCRIPTION

APPLICANT\OWNER:

TOWN OF ROCHESTER
1 CONSTITUTION WAY
ROCHESTER, MA 02770

PROJECT: INFRASTRUCTURE IMPROVEMENTS CRANBERRY HIGHWAY AND COUNTY ROAD EXTENSION
ROCHESTER, MA

PROJECT NO.	2518-01	DATE:	01-30-2024
SCALE:	1" = 20'	DWG. NAME:	C2518-01_
DESIGNED BY:	JS/PLC	CHECKED BY:	PLC

PREPARED BY:

ALLEN & MAJOR ASSOCIATES, INC.
civil engineering ◆ land surveying
environmental consulting ◆ landscape architecture
www.allenmajor.com
10 MAIN STREET
LAKEVILLE MA 02347
TEL: (508) 923-1010
FAX: (508) 923-6309
WOBURN, MA ◆ LAKEVILLE, MA ◆ MANCHESTER, NH

DRAWING TITLE: LAYOUT & MATERIALS PLAN

SHEET No. C-3

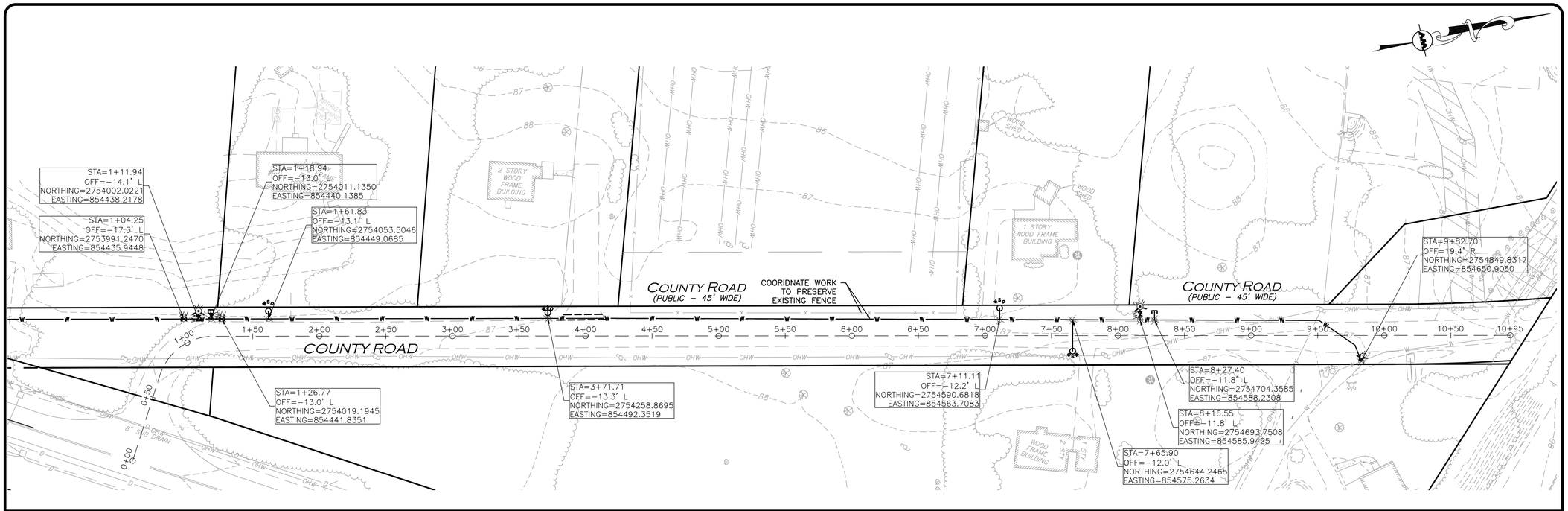

NOTES:

1. LOAM AND SEED ALL DISTURBED AREAS UNLESS OTHERWISE NOTED INCLUDING ROAD SHOULDERS.
2. ALIGNMENT TO COUNTY ROAD EXTENSION IS SHOWN APPROXIMATE.
3. STATIONING IS APPROXIMATE TO THE BASELINE. INSTALLATION OF MAIN, GATE VALVES, AND APPURTENANCES SHOULD BE INSTALLED IN AREAS OF MINIMAL INTRUSION TO EXISTING RIGHT OF WAY AND PROPERTIES ALONG COUNTY ROAD.

GRAPHIC SCALE

40 0 20 40 80 160

(IN FEET)
1 inch = 40 ft.

DIG SAFE

BEFORE YOU DIG
CALL 811 OR
1-888-DIG-SAFE
1-888-344-7233

M:\PROJECTS\2518-01\CIVIL\DRAWINGS\CURRENT\MASSWORKS CONSTRUCTION DRAWINGS\C-2518-01_LINEWORK - MASSWORKS.DWG

ISSUED FOR REVIEW

01-30-2024

PROFESSIONAL ENGINEER FOR
ALLEN & MAJOR ASSOCIATES, INC.

REV	DATE	DESCRIPTION

APPLICANT\OWNER:

TOWN OF ROCHESTER
1 CONSTITUTION WAY
ROCHESTER, MA 02770

PROJECT: INFRASTRUCTURE IMPROVEMENTS CRANBERRY HIGHWAY AND COUNTY ROAD EXTENSION
ROCHESTER, MA

PROJECT NO.	2518-01	DATE:	01-30-2024
SCALE:	1" = 20'	DWG. NAME:	C2518-01_
DESIGNED BY:	JS/PLC	CHECKED BY:	PLC

PREPARED BY:

ALLEN & MAJOR ASSOCIATES, INC.
civil engineering ◆ land surveying
environmental consulting ◆ landscape architecture
www.allenmajor.com
10 MAIN STREET
LAKEVILLE MA 02347
TEL: (508) 923-1010
FAX: (508) 923-6309
WOBURN, MA ◆ LAKEVILLE, MA ◆ MANCHESTER, NH

DRAWING TITLE: LAYOUT PLAN

SHEET No. C-4

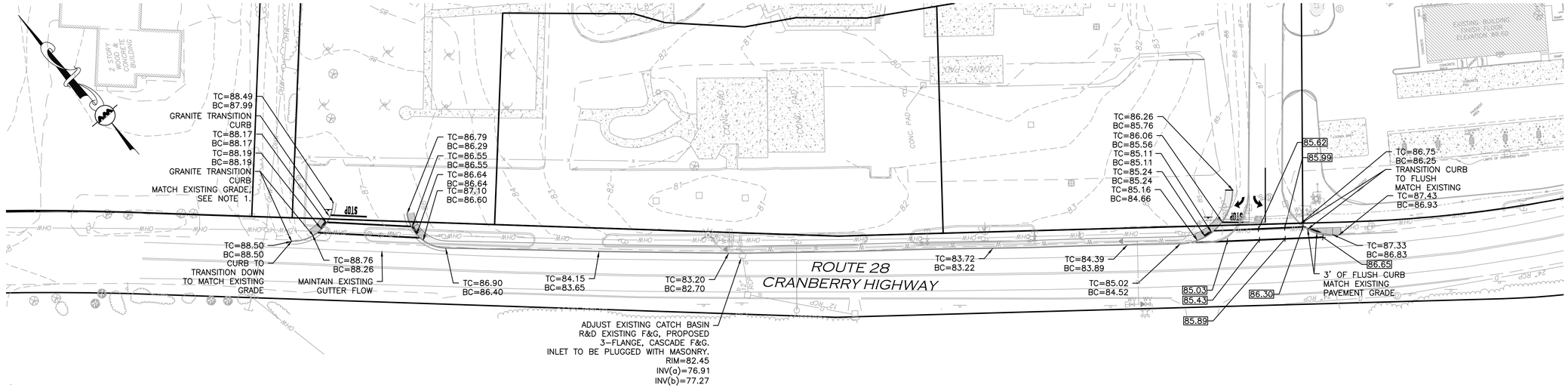

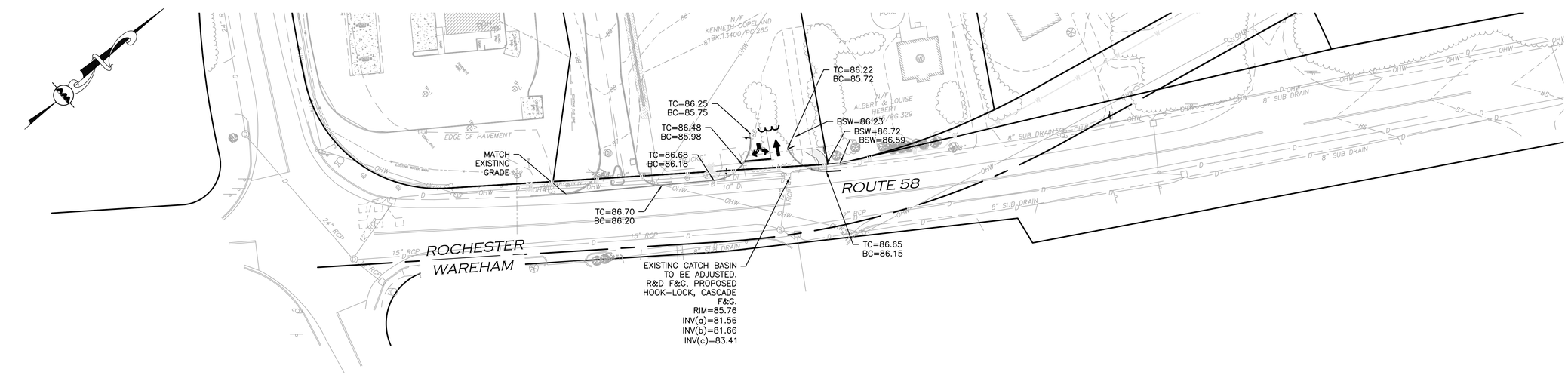

LEGEND

SPOT GRADE	82.40

GRAPHIC SCALE

20 0 10 20 40 80

(IN FEET)
1 inch = 20 ft.

DIG SAFE

BEFORE YOU DIG
CALL 811 OR
1-888-DIG-SAFE
1-888-344-7233

M:\PROJECTS\2518-01\CIVIL\DRAWINGS\CURRENT\MASSWORKS CONSTRUCTION DRAWINGS\C-2518-01_LINEWORK - MASSWORKS.DWG

ISSUED FOR REVIEW

01-30-2024

PROFESSIONAL ENGINEER FOR
ALLEN & MAJOR ASSOCIATES, INC.

REV	DATE	DESCRIPTION

APPLICANT\OWNER:

TOWN OF ROCHESTER
1 CONSTITUTION WAY
ROCHESTER, MA 02770

PROJECT: INFRASTRUCTURE IMPROVEMENTS CRANBERRY HIGHWAY AND COUNTY ROAD EXTENSION
ROCHESTER, MA

PROJECT NO.	2518-01	DATE:	01-30-2024
SCALE:	1" = 20'	DWG. NAME:	C2518-01_
DESIGNED BY:	JS/PLC	CHECKED BY:	PLC

PREPARED BY:

ALLEN & MAJOR ASSOCIATES, INC.
civil engineering ◆ land surveying
environmental consulting ◆ landscape architecture
www.allenmajor.com
10 MAIN STREET
LAKEVILLE MA 02347
TEL: (508) 923-1010
FAX: (508) 923-6309
WOBURN, MA ◆ LAKEVILLE, MA ◆ MANCHESTER, NH

DRAWING TITLE: GRADING & DRAINAGE PLAN

SHEET No. C-5

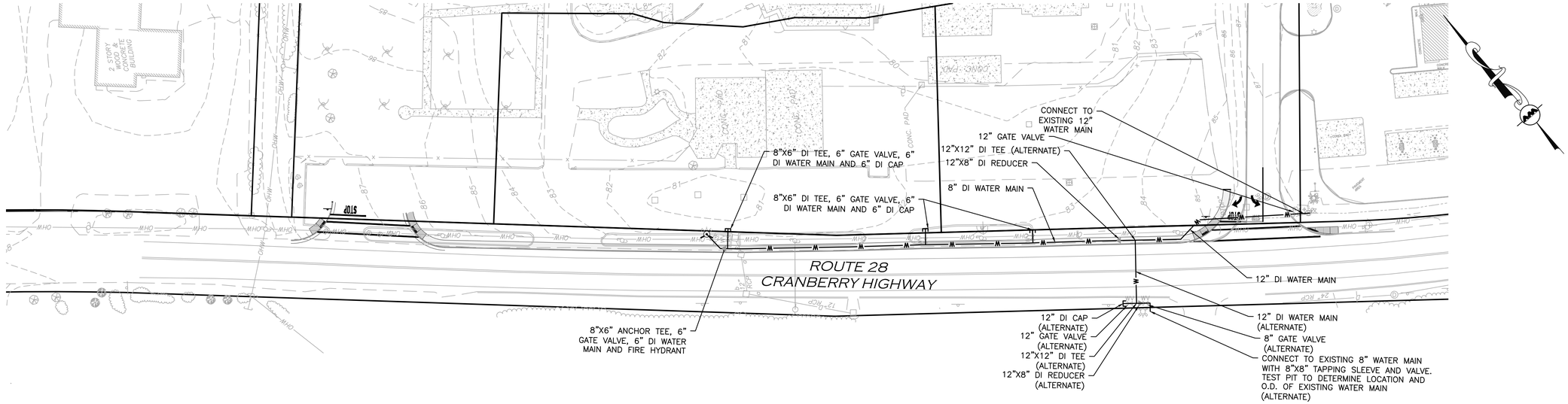

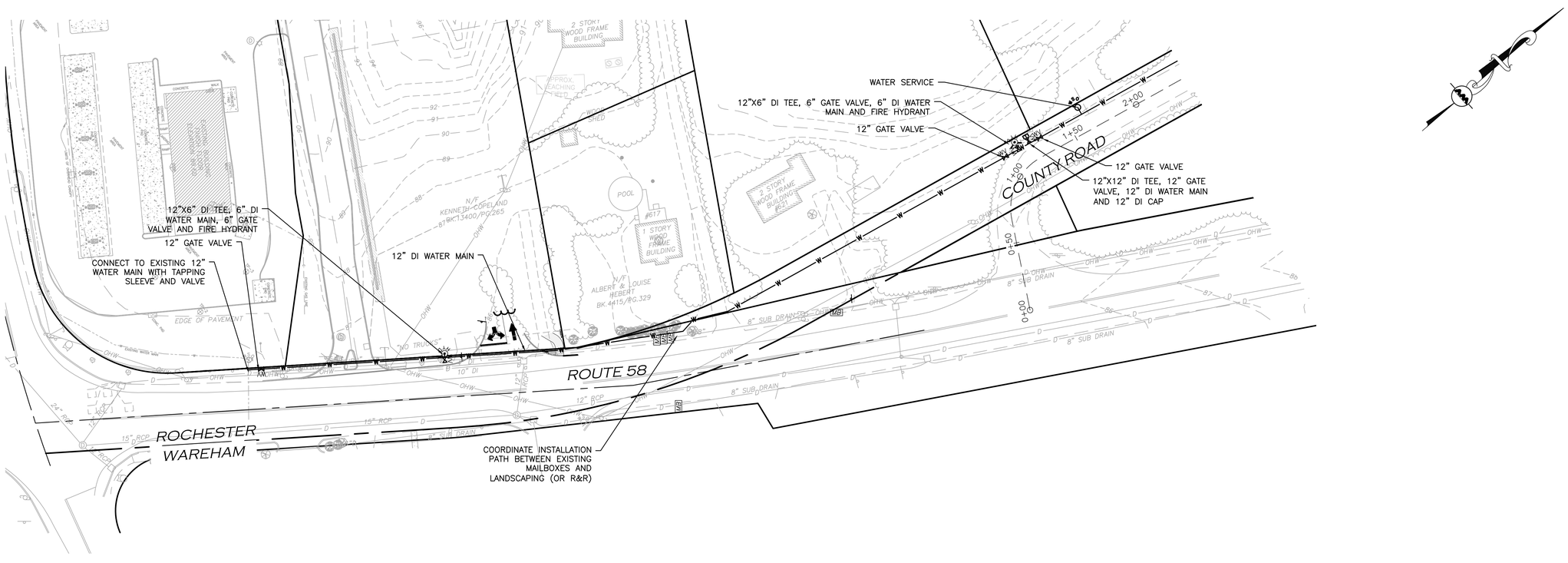

DIG SAFE

BEFORE YOU DIG
CALL 811 OR
1-888-DIG-SAFE
1-888-344-7233

NOTES:

1. ALL WATER SERVICE CURB STOP LOCATIONS SHALL BE COORDINATED WITH PROPERTY OWNER AND WAREHAM FIRE DISTRICT PRIOR TO INSTALLATION.

GRAPHIC SCALE

40 0 20 40 80 160

(IN FEET)
1 inch = 40 ft.

ISSUED FOR REVIEW

01-30-2024

PROFESSIONAL ENGINEER FOR
ALLEN & MAJOR ASSOCIATES, INC.

REV	DATE	DESCRIPTION

APPLICANT\OWNER:

TOWN OF ROCHESTER
1 CONSTITUTION WAY
ROCHESTER, MA 02770

PROJECT: INFRASTRUCTURE IMPROVEMENTS CRANBERRY HIGHWAY AND COUNTY ROAD EXTENSION
ROCHESTER, MA

PROJECT NO.	2518-01	DATE:	01-30-2024
SCALE:	1" = 40'	DWG. NAME:	C2518-01_
DESIGNED BY:	JS/PLC	CHECKED BY:	PLC

PREPARED BY:

ALLEN & MAJOR ASSOCIATES, INC.
civil engineering ◆ land surveying
environmental consulting ◆ landscape architecture
www.allenmajor.com
10 MAIN STREET
LAKEVILLE MA 02347
TEL: (508) 923-1010
FAX: (508) 923-6309

WOBURN, MA ◆ LAKEVILLE, MA ◆ MANCHESTER, NH

DRAWING TITLE: UTILITIES PLAN

SHEET No. C-6

M:\PROJECTS\2518-01\CIVIL\DRAWINGS\CURRENT\MASSWORKS CONSTRUCTION DRAWINGS\C-2518-01_LINEWORK - MASSWORKS.DWG

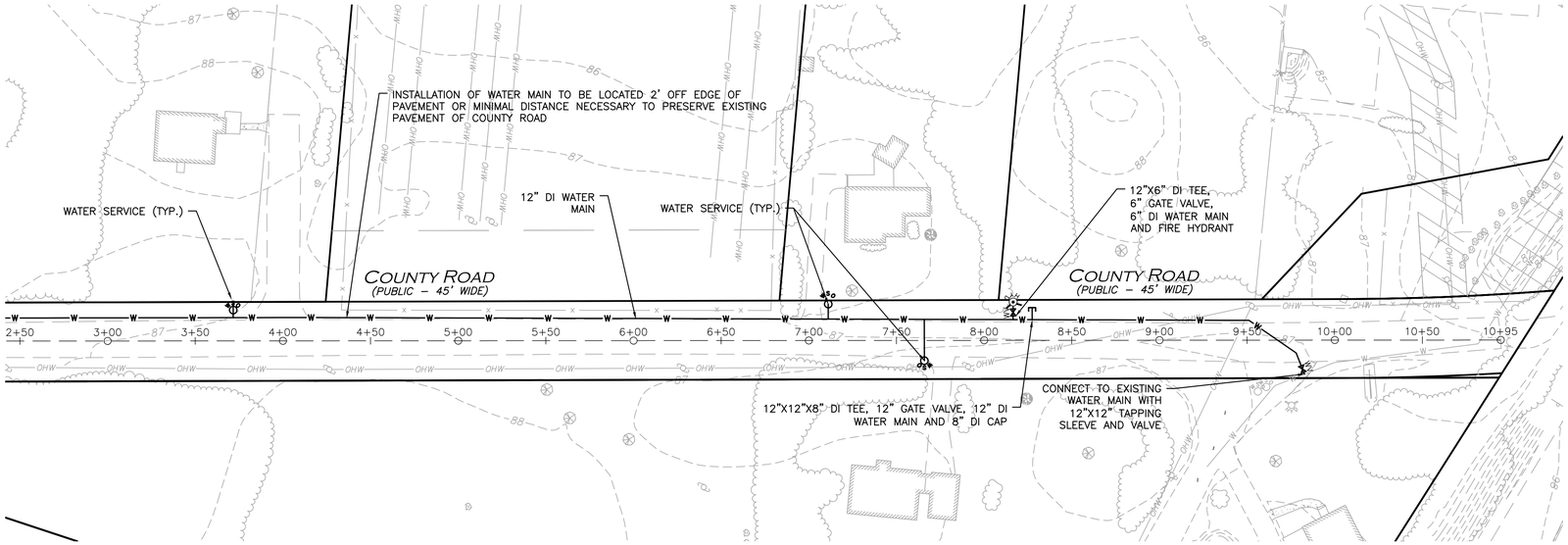

LEGEND:

- PROPERTY LINE
- SIGN
- CURB
- TRAFFIC ARROWS
- SIDEWALK
- ADA ACCESSIBLE RAMP
- ROADWAY STRIPING
- ADA DET. WARNING SURFACE

NOTES:

1. ALL WATER SERVICE CURB STOP LOCATIONS SHALL BE COORDINATED WITH PROPERTY OWNER AND WAREHAM FIRE DISTRICT PRIOR TO INSTALLATION.

GRAPHIC SCALE

40 0 20 40 80 160

(IN FEET)
1 inch = 40 ft.

DIG SAFE

BEFORE YOU DIG
CALL 811 OR
1-888-DIG-SAFE
1-888-344-7233

M:\PROJECTS\2518-01\CIVIL\DRAWINGS\CURRENT\MASSWORKS CONSTRUCTION DRAWINGS\C-2518-01_LINEWORK - MASSWORKS.DWG

ISSUED FOR REVIEW

01-30-2024

PROFESSIONAL ENGINEER FOR
ALLEN & MAJOR ASSOCIATES, INC.

REV	DATE	DESCRIPTION

APPLICANT\OWNER:

TOWN OF ROCHESTER
1 CONSTITUTION WAY
ROCHESTER, MA 02770

PROJECT: INFRASTRUCTURE IMPROVEMENTS CRANBERRY HIGHWAY AND COUNTY ROAD EXTENSION
ROCHESTER, MA

PROJECT NO.	2518-01	DATE:	01-30-2024
SCALE:	1" = 20'	DWG. NAME:	C2518-01_
DESIGNED BY:	JS/PLC	CHECKED BY:	PLC

PREPARED BY:

ALLEN & MAJOR ASSOCIATES, INC.
civil engineering ◆ land surveying
environmental consulting ◆ landscape architecture
www.allenmajor.com
10 MAIN STREET
LAKEVILLE MA 02347
TEL: (508) 923-1010
FAX: (508) 923-6309
WOBURN, MA ◆ LAKEVILLE, MA ◆ MANCHESTER, NH

DRAWING TITLE: UTILITIES PLAN

SHEET No. C-7

NOT USED
NOT TO SCALE
(X)

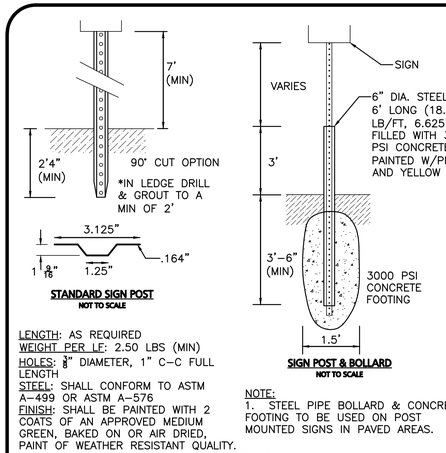

STANDARD SIGN POST
NOT TO SCALE

SIGN POST & BOLLARD
NOT TO SCALE

LENGTH: AS REQUIRED
WEIGHT PER LF: 2.50 LBS (MIN)
HOLES: 3/8" DIAMETER, 1" C-C FULL LENGTH
STEEL: SHALL CONFORM TO ASTM A-499 OR ASTM A-576
FINISH: SHALL BE PAINTED WITH 2 COATS OF AN APPROVED MEDIUM GREEN, BAKED ON OR AIR DRIED, PAINT OF WEATHER RESISTANT QUALITY.

NOTE:
1. STEEL PIPE BOLLARD & CONCRETE FOOTING TO BE USED ON POST MOUNTED SIGNS IN PAVED AREAS.

SIGN POST DETAIL
NOT TO SCALE
(11)

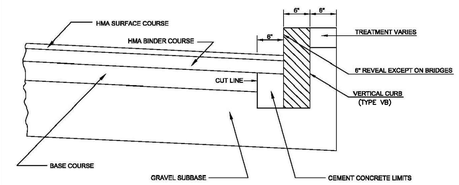

NOTES:

1. THIS PROCEDURE IS APPLICABLE ONLY IF CURB IS TO BE SET AFTER BASE COURSE IS IN PLACE PRIOR TO BINDER AND TOP PLACEMENT.

2. CUT NEAT LINE 6" FROM CURB LINE AND REMOVE BASE AND GRAVEL. REPLACE WITH CEMENT CONCRETE.

3. ANY DESIGNATED CEMENT CONCRETE THAT IS ACCEPTABLE UNDER SECTION M4 OF THE STANDARD SPECIFICATIONS MAY BE USED; ALL TEST REQUIREMENTS ARE WAIVED. HOT MIX ASPHALT SHALL NOT TO BE USED AS A SUBSTITUTE.

4. PAYMENT PER FOOT OF CURB IS INCLUSIVE OF ALL ITEMS OF WORK REQUIRED TO COMPLETE PROPER INSTALLATION OF THE CURB.

5. HMA SURFACE COURSE TO BE 1.5" SSC 12.5 AND HMA BINDER COURSE TO BE 2.5" SSC 12.5.

MASSDOT CURB SETTING DETAIL (E 106.3.0)
NOT TO SCALE
(10)

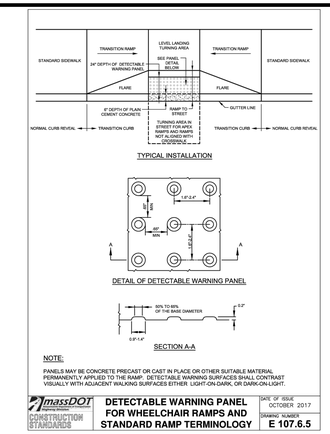

MASSDOT DETECTABLE WARNING PANEL DETAIL (E 107.6.5)
NOT TO SCALE
(9)

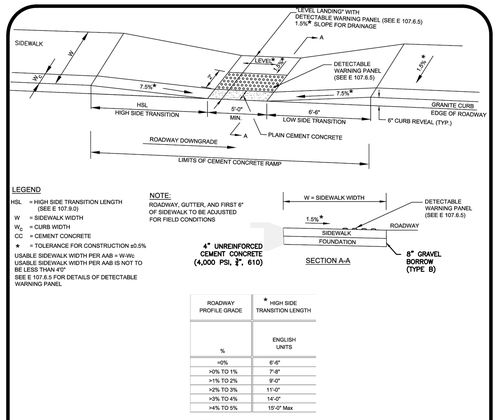

ROADWAY PROFILE GRADE %	* HIGH SIDE TRANSITION LENGTH ENGLISH UNITS
=0%	6'-6"
>0% TO 1%	7'-8"
>1% TO 2%	9'-0"
>2% TO 3%	11'-0"
>3% TO 4%	14'-0"
>4% TO 5%	15'-0" Max

NOTE:
* BASED ON A DESIGN SLOPE OF 7.5% AND A REVEAL OF 6".

MASSDOT ADA RAMP & TRANSITION LENGTH DETAIL (E 107.2.1 & E 107.9.0)
NOT TO SCALE
(8)

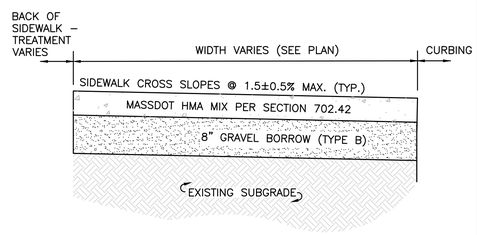

NOTES:
1. SEE PLAN FOR ELEVATIONS AT CURB.
2. ALL SIDEWALKS TO HAVE 1.5% (±0.5%) CROSS SLOPE.
3. HMA MIXTURE TO CONSIST OF (OR APPROVED EQUAL):
   – 1-1/4" SUPERPAVE SURFACE COURSE – 9.5 (SSC-9.5)
   – 1-3/4" SUPERPAVE SURFACE COURSE – 12.5 (SSC-12.5)
4. SEE DETAIL 10 FOR CURB INSTALLATION DETAILS.

SIDEWALK DETAIL
NOT TO SCALE
(7)

NOTE:
TACK COAT – PROVIDE EMULSIFIED ASPHALT WHICH CONFORMS TO THE REQUIREMENTS OF THE STATE SPECIFICATIONS, DILUTED WITH ONE PART WATER TO ONE ONE PART ASPHALT FOLLOWING AASHTO M140/ASTM D997, OR AASHTO M208/ASTM D2397, SS-1H, CSS-1, OR CSS-1H.

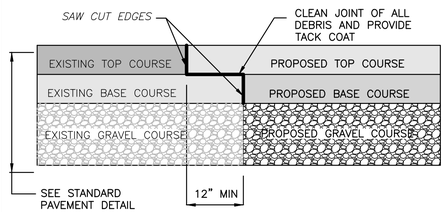

PAVEMENT KEY CUT DETAIL
NOT TO SCALE
(6)

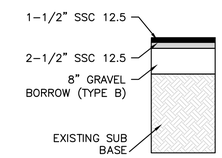

NOTES:
1. BASE AND SUBBASE MATERIAL TO CONFORM TO MASSDOT STATE STANDARD SPECIFICATIONS.

2. MASSDOT HMA MIX STRUCTURE TO BE USED FOR SITE DRIVEWAYS WITHIN THE STATE HIGHWAY LAYOUT.

HMA ASPHALT/BITUMINOUS CONCRETE PAVEMENT
NOT TO SCALE
(5)

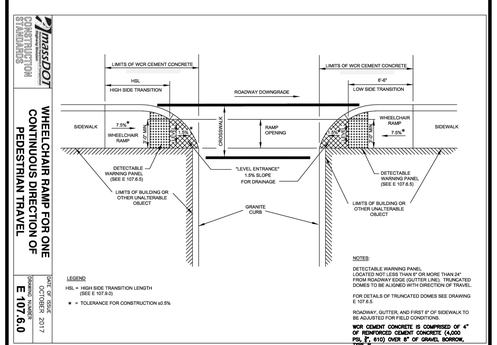

MASSDOT ADA RAMP DETAIL (E 107.6.0)
NOT TO SCALE
(4)

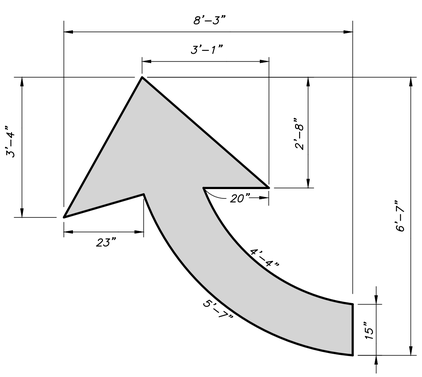

WHITE THERMOPLASTIC TURNING ARROW
NOT TO SCALE
(3)

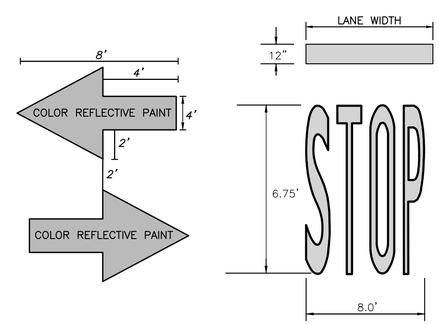

WHITE THERMOPLASTIC LETTERING / ARROWS
NOT TO SCALE
(2)

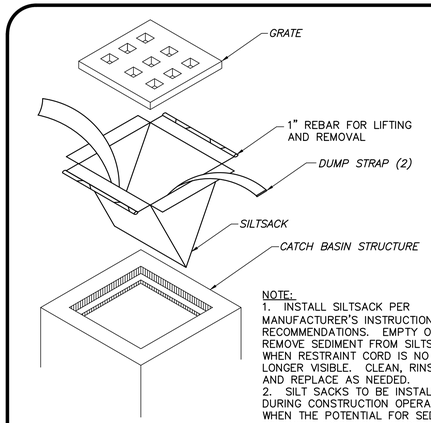

NOTE:
1. INSTALL SILTSACK PER MANUFACTURER'S INSTRUCTIONS AND RECOMMENDATIONS. EMPTY OR REMOVE SEDIMENT FROM SILTSACK WHEN RESTRAINT CORD IS NO LONGER VISIBLE. CLEAN, RINSE, AND REPLACE AS NEEDED.
2. SILT SACKS TO BE INSTALLED DURING CONSTRUCTION OPERATIONS WHEN THE POTENTIAL FOR SEDIMENT TO ENTER EXISTING & PROPOSED BASINS EXISTS.

SILTSACK INLET DETAIL
NOT TO SCALE
(1)

ISSUED FOR REVIEW
01-30-2024

PROFESSIONAL ENGINEER FOR ALLEN & MAJOR ASSOCIATES, INC.

REV	DATE	DESCRIPTION

APPLICANT\OWNER:
TOWN OF ROCHESTER
1 CONSTITUTION WAY
ROCHESTER, MA 02770

PROJECT: INFRASTRUCTURE IMPROVEMENTS CRANBERRY HIGHWAY AND COUNTY ROAD EXTENSION
ROCHESTER, MA

PROJECT NO.	2518-01	DATE:	01-30-2024
SCALE:	1" = ##'	DWG. NAME:	C2518-01_
DESIGNED BY:	JS/PLC	CHECKED BY:	PLC

PREPARED BY:

ALLEN & MAJOR ASSOCIATES, INC.
civil engineering ◆ land surveying
environmental consulting ◆ landscape architecture
www.allenmajor.com
10 MAIN STREET
LAKEVILLE MA 02347
TEL: (508) 923-1010
FAX: (508) 923-6309
WOBURN, MA ◆ LAKEVILLE, MA ◆ MANCHESTER, NH

DRAWING TITLE: DETAILS
SHEET No. C-8

NOT USED
NOT TO SCALE

NOT USED
NOT TO SCALE

NOT USED
NOT TO SCALE

NOT USED
NOT TO SCALE

NOT USED
NOT TO SCALE

NOT USED
NOT TO SCALE

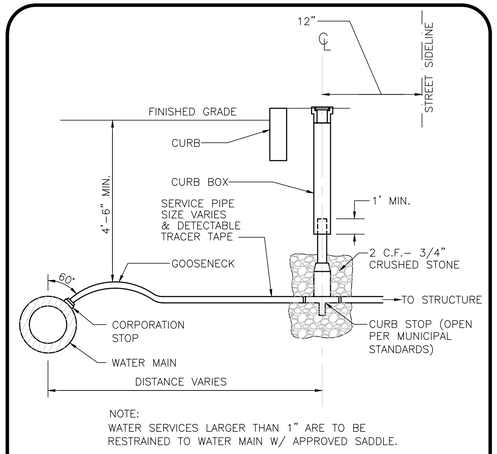

NOTE:
WATER SERVICES LARGER THAN 1" ARE TO BE RESTRAINED TO WATER MAIN W/ APPROVED SADDLE.

TYPICAL WATER SERVICE CONNECTION
NOT TO SCALE

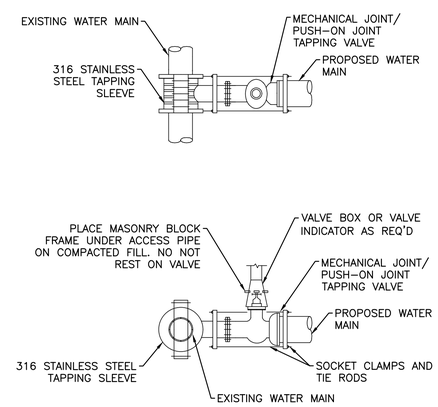

TAPPING SLEEVE & VALVE
NOT TO SCALE
5

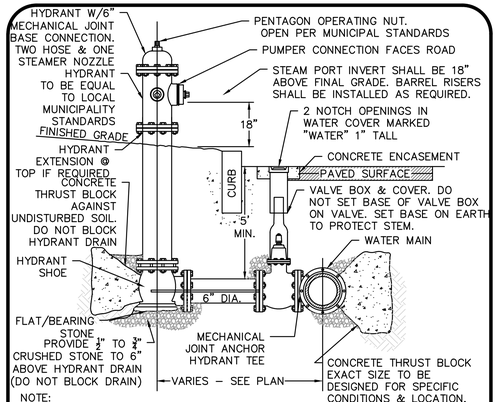

NOTE:
1.) HYDRANTS AND VALVES TO OPERATE PER MUNICIPAL STANDARDS.
2.) HYDRANT SHALL BE A MINIMUM OF 5'–0" FROM EDGE OF TRAVELED WAY (WHERE POSSIBLE).

FIRE HYDRANT CONNECTION DETAIL
NOT TO SCALE
4

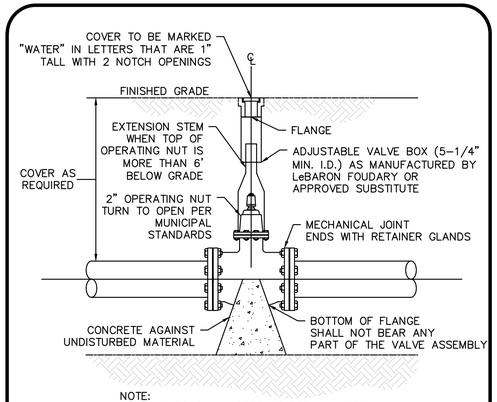

NOTE:
1. VALVES SHALL OPERATE PER MUNICIPAL STANDARDS

GATE VALVE DETAIL
NOT TO SCALE
3

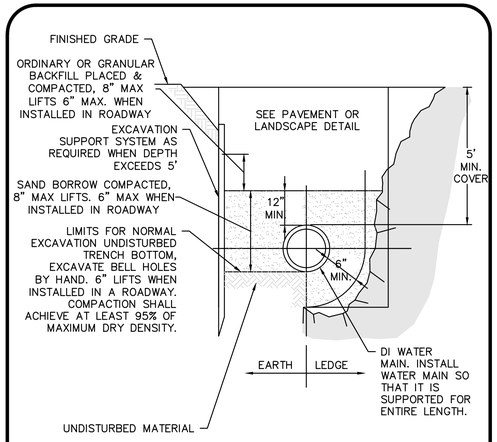

WATER TRENCH SECTION DETAIL
NOT TO SCALE
2

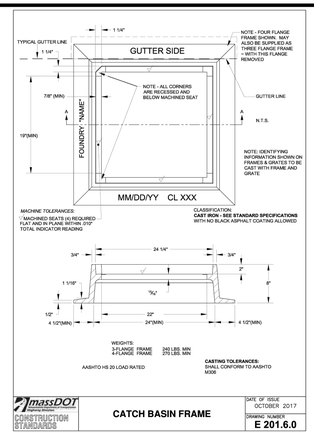

MASSDOT CATCH BASIN FRAME (E 201.6.0)
NOT TO SCALE
1

ISSUED FOR REVIEW
01-30-2024

PROFESSIONAL ENGINEER FOR
ALLEN & MAJOR ASSOCIATES, INC.

REV	DATE	DESCRIPTION

APPLICANT\OWNER:
TOWN OF ROCHESTER
1 CONSTITUTION WAY
ROCHESTER, MA 02770

PROJECT: INFRASTRUCTURE IMPROVEMENTS CRANBERRY HIGHWAY AND COUNTY ROAD EXTENSION
ROCHESTER, MA

PROJECT NO.	2518-01	DATE:	01-30-2024
SCALE:	1" = ##'	DWG. NAME:	C2518-01_
DESIGNED BY:	JS/PLC	CHECKED BY:	PLC

PREPARED BY:

ALLEN & MAJOR ASSOCIATES, INC.
civil engineering ◆ land surveying
environmental consulting ◆ landscape architecture
www.allenmajor.com
10 MAIN STREET
LAKEVILLE MA 02347
TEL: (508) 923-1010
FAX: (508) 923-6309
WOBURN, MA ◆ LAKEVILLE, MA ◆ MANCHESTER, NH

THIS DRAWING HAS BEEN PREPARED IN DIGITAL FORMAT. CLIENT/CLIENT'S REPRESENTATIVE OR CONSULTANTS MAY BE PROVIDED COPIES OF DRAWINGS AND SPECIFICATIONS FOR HIS/HER INFORMATION AND/OR SPECIFIC USE ON THIS PROJECT. DUE TO THE POTENTIAL THAT THE PROVIDED INFORMATION MAY BE MODIFIED UNINTENTIONALLY OR OTHERWISE, ALLEN & MAJOR ASSOCIATES, INC. MAY REMOVE ALL INDICATION OF THE DOCUMENT'S AUTHORSHIP ON THE DIGITAL MEDIA. PRINTED REPRESENTATIONS OR PORTABLE DOCUMENT FORMAT OF THE DRAWINGS AND SPECIFICATIONS ISSUED SHALL BE THE ONLY RECORD COPIES OF ALLEN & MAJOR ASSOCIATES, INC.'S WORK PRODUCT.

DRAWING TITLE: DETAILS

SHEET No. C-9

M:\PROJECTS\2518-01\CIVIL\DRAWINGS\CURRENT\MASSWORKS CONSTRUCTION DRAWINGS\C-2518-01_LINEWORK - MASSWORKS.DWG