APPROVED BY
TOWN OF ROCHESTER PLANNING BOARD

DATE SUBMITTED: _____

DATE ENDORSED: _____

DATE APPROVED: _____

_____

_____

_____

_____

_____

_____

TOWN OF ROCHESTER PLANNING BOARD

SITE PLANS FOR
ROCHESTER CROSSROADS
SMART GROWTH DEVELOPMENT
CRANBERRY HIGHWAY
ROCHESTER, MA 02770

ILLUSTRATIVE RENDERING

APPLICANT:
STEEN REALTY AND DEVELOPMENT CORP.
3 LEDGEWOOD BLVD
DARTMOUTH, MA 02747

SITE ENGINEER/SURVEYOR:
ALLEN & MAJOR ASSOCIATES, INC.
10 MAIN ST
LAKEVILLE, MA 02347

PROJECT ARCHITECT:
JGA ARCHITECTURE
200 WINTER ST
HOLLISTON, MA 01746

TRAFFIC CONSULTANTS:
MCMAHON ASSOCIATES, INC.
350 MYLES STANDISH BLVD #103
TAUNTON, MA 02780

GEOHYDROLOGIST:
GEOHYDROCYCLE, INC.
151 CALIFORNIA ST
NEWTON, MA 02458

LIST OF DRAWINGS

DRAWING TITLE	SHEET NO.	ISSUED	REVISED
EXISTING CONDITIONS PLAN	V-101	10-25-2019	- -
ZONING PLAN	C-001	10-25-2019	12-01-2020
EASEMENT PLAN	C-002	10-25-2019	12-01-2020
PHASING PLAN	C-003	10-25-2019	12-01-2020
NOTES & ABBREVIATIONS	C-004 - C-005	10-25-2019	12-01-2020
TEST PITS	C-006 - C-007	10-25-2019	12-01-2020
OVERVIEW PLAN	C-100	10-25-2019	12-01-2020
SITE PREP & EROSION CONTROL PLAN	C-101	10-25-2019	12-01-2020
LAYOUT & MATERIALS PLAN	C-102 - C-104	10-25-2019	12-01-2020
GRADING & DRAINAGE PLAN	C-105 - C-108	10-25-2019	12-01-2020
UTILITIES PLAN	C-109 - C-111	10-25-2019	12-01-2020
PHOTOMETRICS PLAN	C-112 - C-114	10-25-2019	12-01-2020
DETAILS	C-501 - C-509	10-25-2019	12-01-2020
VEHICLE MOVEMENT PLAN	C-601	10-25-2019	12-01-2020
EMERGENCY APPARATUS PROFILE PLAN	C-602	10-25-2019	12-01-2020
LANDSCAPE PLAN	L-101 - L-105	10-25-2019	12-01-2020
ARCHITECTURAL PLANS (BY OTHERS)	A-1 - A2	07-13-2018	12-02-2020

WAIVERS REQUESTED:

1. ZONING BY–LAW SECTION V: GENERAL COMMERCIAL SECTION C. SITE PLAN, SUBSECTION 2 PERIMETER VEGETATIVE BOUNDARY.

   A WAIVER IS REQUESTED TO ALLOW FOR CONSTRUCTION UP TO THE INTERIOR LOT LINES AS PART OF THE MASTER PLAN DEVELOPMENT WITHOUT AN INTERNAL LANDSCAPING/BUFFER STRIP.

2. APPENDIX A – PERFORMANCE STANDARDS AND DESIGN CRITERIA FOR STORMWATER MANAGEMENT SYSTEM OF THE RULES AND REGULATIONS GOVERNING THE SUBDIVISION OF LAND, SECTION 4.2.2.

   A WAIVER IS REQUESTED FOR A STORMWATER MANAGEMENT SYSTEM LOCATED AT CRANBERRY HIGHWAY TO BE LOCATED CLOSER THAN 100 FEET TO A STREET LINE.

3. APPENDIX A – PERFORMANCE STANDARDS AND DESIGN CRITERIA FOR STORMWATER MANAGEMENT SYSTEM OF THE RULES AND REGULATIONS GOVERNING THE SUBDIVISION OF LAND, SECTION 4.2.2.

   A WAIVER IS REQUESTED FOR A REDUCED SETBACK OF LESS THAN 200 FEET BETWEEN A STORMWATER MANAGEMENT SYSTEM AND A SUBSURFACE SEWAGE DISPOSAL SYSTEM. IN NO CASE SHALL THE SETBACK BE LESS THAN 100 FEET.

4. APPENDIX A – PERFORMANCE STANDARDS AND DESIGN CRITERIA FOR STORMWATER MANAGEMENT SYSTEM OF THE RULES AND REGULATIONS GOVERNING THE SUBDIVISION OF LAND, SECTION 4.6.5.

   A WAIVER IS REQUESTED FOR A REDUCED SEPARATION ABOVE THE MAXIMUM GROUNDWATER TABLE FROM 3 FEET TO 2 FEET BASED ON THE GROUNDWATER MOUNDING ANALYSIS PURSUANT TO THE WASTEWATER LEACHING FEET. 2 FEET IS THE MINIMUM SEPARATION UNDER STATE PERFORMANCE STANDARDS.

PREPARED BY:

ALLEN & MAJOR ASSOCIATES, INC.
civil engineering ◆ land surveying
environmental consulting ◆ landscape architecture
www.allenmajor.com
10 MAIN STREET
LAKEVILLE, MA 02347
TEL: (508) 923-1010
FAX: (508) 923-6309

WOBURN, MA ◆ LAKEVILLE, MA ◆ MANCHESTER, NH

Copyright©2020 Allen & Major Associates, Inc.
All Rights Reserved

ISSUED FOR REVIEW
OCTOBER 25, 2019
REV.6: DECEMBER 01, 2020

M:\PROJECTS\2518-01\CIVIL\DRAWINGS\CURRENT\C-2518-01_ABBREVIATIONS & NOTES.DWG

CRANBERRY HIGHWAY
(ROUTE - 60' WIDE)
ROUTE 495
(LIMITED ACCESS HIGHWAY)
COUNTY ROAD
PUBLIC - 40' WIDE)
LOT 41.C1
LOT 41.C2
LOT 41.C3
LOT 41.C4
LOT 41.C5
LOT 41.C6
LOT 41.C7
LOT 41.C8
LOT 41.C9
LOT 41.C10
LOT 41.C11
LOT 41.C12
LOT 41.C13
LOT 41.C14
LOT 41.C15
LOT 41.C16
LOT 41.C17
LOT 41.C18
LOT 41.C19
LOT 41.C20
LOT

LAND USAGE TABLE - GENERAL COMMERCIAL

ITEM	REQUIRED/ ALLOWED	LOT 41.C1	LOT 41.C2	LOT 41.C3	LOT 41.C4	LOT 41.C5	LOT 41.C6	LOT 41.C7	TOTAL
GROSS FLOOR AREA	N/A	337,223 SF	0 SF	0 SF	0 SF	12,960 SF	0 SF	0 SF	297,299 SF
LOT AREA	1 ACRE	10.40 ACRES	1.19 ACRES	1.13 ACRES	1.34 ACRES	11.02 ACRES	2.78 ACRES	3.03 ACRES	30.89 ACRES
LOT FRONTAGE (MIN)	150'	150'	332'	267'	204'	259'	150'	199'	N/A
FRONT YARD SETBACK	30'	231.8'	N/A	N/A	N/A	486.4'	N/A	N/A	N/A
SIDE YARD SETBACK	40'	81.4'	N/A	N/A	N/A	33.7'	N/A	N/A	N/A
REAR YARD SETBACK	40'	89.5'	N/A	N/A	N/A	255.7'	N/A	N/A	N/A
FLOOR AREA RATIO	0.7	0.7	0.00	0.00	0.00	0.03	0.00	0.00	0.22
BUILDABLE AREA (MIN)	20,000 SF	452,090 SF	51,855 SF	49,386 SF	58,452 SF	389,217 SF	121,309 SF	132,221 SF	N/A
LOT COVERAGE (MAX)	70%	BUILDINGS: 18.97% PAVEMENT: 32.26% SIDEWALK: 5.96% TOTAL: 57.20%	BUILDINGS: 0.00% PAVEMENT: 16.49% SIDEWALK: 0.00% TOTAL: 16.49%	BUILDINGS: 0.00% PAVEMENT: 29.02% SIDEWALK: 1.84% TOTAL: 30.86%	BUILDINGS: 0.00% PAVEMENT: 18.16% SIDEWALK: 6.06% TOTAL: 24.22%	BUILDINGS: 2.70% PAVEMENT: 3.22% SIDEWALK: 0.43% TOTAL: 6.35%	BUILDINGS: 0.00% PAVEMENT: 8.67% SIDEWALK: 0.00% TOTAL: 8.67%	BUILDINGS: 0.00% PAVEMENT: 1.69% SIDEWALK: 0.00% TOTAL: 1.69%	BUILDINGS: 7.33% PAVEMENT: 17.85% SIDEWALK: 3.71% TOTAL: 28.89%
BUILDING HEIGHT (MAX)	N/A	4 STORIES	N/A	N/A	N/A	1 STORY	N/A	N/A	N/A
PARKING SPACES: DWELLINGS (RESIDENTIAL AND RETAIL)	N/A	RESIDENTIAL UNITS: 208 TOTAL SPACES AVAILABLE: 353 -CLUBHOUSE 5 -RESIDENTIAL (MIN):312 -FLEX SPACES: 36	TOTAL SPACES: 0	TOTAL SPACES: 0	TOTAL SPACES: 0	RESIDENTIAL UNITS: 0 RESIDENTIAL SPACES: 3** ACCESSIBLE: 1 STANDARD: 2	TOTAL SPACES: 0	TOTAL SPACES: 0	CLUBHOUSE SPACES: 5 AMENITY SPACES: 3 RESIDENTIAL UNITS SPACES: 348 WWTP: 2
DENSITY (UNITS/ACRE)	N/A	20 UNITS/ACRE	N/A	N/A	N/A	N/A	N/A	N/A	N/A
DEVELOPABLE LAND	N/A	10.40 ACRES*	N/A	N/A	N/A	9.05 ACRES	N/A	3.03 ACRES*	N/A

PARKING KEY

- RESIDENTIAL UNIT PARKING
- RESIDENTIAL AMENITY PARKING
- CLUBHOUSE PARKING
- WWTP PARKING (UNSTRIPED)
- SHARED/FLEX PARKING

*WETLAND AREA (934 SF) AND STEEP SLOPES (4,696 SF) HAVE BEEN EXCLUDED INCLUDED IN DEVELOPMENT AREA AS THEY DO NOT EXCEED ONE-HALF ACRE IN SIZE (6A/6C)

**3 SPACES NOTED ARE FOR RESIDENTIAL USE AT THE GARDEN. WWTP PARKING IS ASSUMED WITHIN THE DRIVEWAY TO THE WWTP BUILDING AND/OR WITHIN THE BUILDING

*STEEP SLOPE AREA (1,869 SF) HAS BEEN EXCLUDED INCLUDED IN DEVELOPMENT AREA AS THEY DO NOT EXCEED ONE-HALF ACRE IN SIZE (6C)

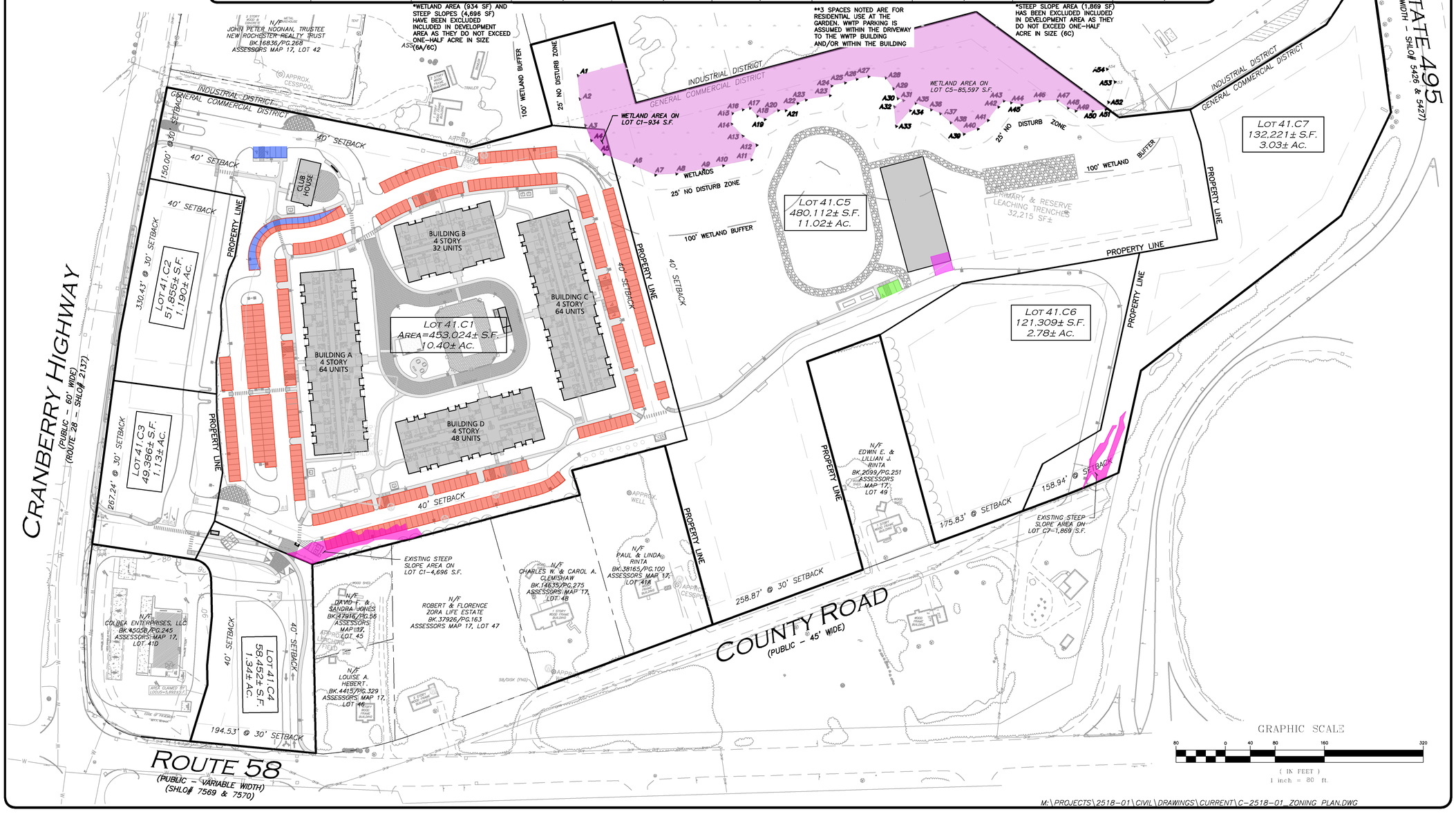

M:\PROJECTS\2518-01\CIVIL\DRAWINGS\CURRENT\C-2518-01_ZONING PLAN.DWG

APPROVED BY
TOWN OF ROCHESTER PLANNING BOARD

DATE SUBMITTED: _____

DATE ENDORSED: _____

DATE APPROVED: _____

_____

_____

_____

_____

_____

_____

TOWN OF ROCHESTER PLANNING BOARD

ISSUED FOR REVIEW
10-25-2019 REV. 6:12-01-2020

COMMONWEALTH OF MASSACHUSETTS
PHILIP L CORDEIRO
CIVIL
NO. 47083
REGISTERED PROFESSIONAL ENGINEER

Philip L Cordeiro
c=US, o=Allen and Major Associates Inc., ou=A01410C0000017598B4F D00002012, cn=Philip L Cordeiro
2021.01.26 14:16:15 -05'00'

PROFESSIONAL ENGINEER FOR
ALLEN & MAJOR ASSOCIATES, INC.

REV	DATE	DESCRIPTION
6	12-01-2020	PER PLANNING BOARD PEER REVIEW COMMENTS
5	10-23-2020	PER PLANNING BOARD PEER REVIEW COMMENTS
4	10-02-2020	PER PLANNING BOARD PEER REVIEW COMMENTS
3	07-31-2020	PER PLANNING BOARD PEER REVIEW COMMENTS
2	07-09-2020	PER NOI PEER REVIEW COMMENTS
1	05-18-2020	PER NOI PEER REVIEW COMMENTS

APPLICANT\OWNER:

STEEN
REALTY AND DEVELOPMENT CORPORATION
3 LEDGEWOOD BOULEVARD DARTMOUTH, MA 02747

PROJECT:

ROCHESTER CROSSROADS
SMART GROWTH DEVELOPMENT
CRANBERRY HIGHWAY
ROCHESTER, MA

PROJECT NO.	2518-01	DATE:	10-25-2019
SCALE:	1" = 80'	DWG. NAME:	C2518-01_
DESIGNED BY:	PGM/CMcC	CHECKED BY:	PC

PREPARED BY:

ALLEN & MAJOR ASSOCIATES, INC.
civil engineering ◆ land surveying
environmental consulting ◆ landscape architecture
www.allenmajor.com
10 MAIN STREET
LAKEVILLE MA 02347
TEL: (508) 523-1010
FAX: (508) 523-6309

WOBURN, MA ◆ LAKEVILLE, MA ◆ MANCHESTER, NH

THIS DRAWING HAS BEEN PREPARED IN DIGITAL FORMAT. CLIENT/CLIENT'S REPRESENTATIVE OR CONSULTANTS MAY BE PROVIDED COPIES OF DRAWINGS AND SPECIFICATIONS FOR HIS/HER INFORMATION AND/OR SPECIFIC USE ON THIS PROJECT. DUE TO THE POTENTIAL THAT THE PROVIDED INFORMATION MAY BE MODIFIED UNINTENTIONALLY OR OTHERWISE, ALLEN & MAJOR ASSOCIATES, INC. MAY REMOVE ALL INDICATION OF THE DOCUMENT'S AUTHORSHIP ON THE DIGITAL MEDIA. PRINTED REPRESENTATIONS OR PORTABLE DOCUMENT FORMAT OF THE DRAWINGS AND SPECIFICATIONS ISSUED SHALL BE THE ONLY RECORD COPIES OF ALLEN & MAJOR ASSOCIATES, INC.'S WORK PRODUCT.

DRAWING TITLE: ZONING PLAN

SHEET No. C-001

Copyright©2020 Allen & Major Associates, Inc.
All Rights Reserved

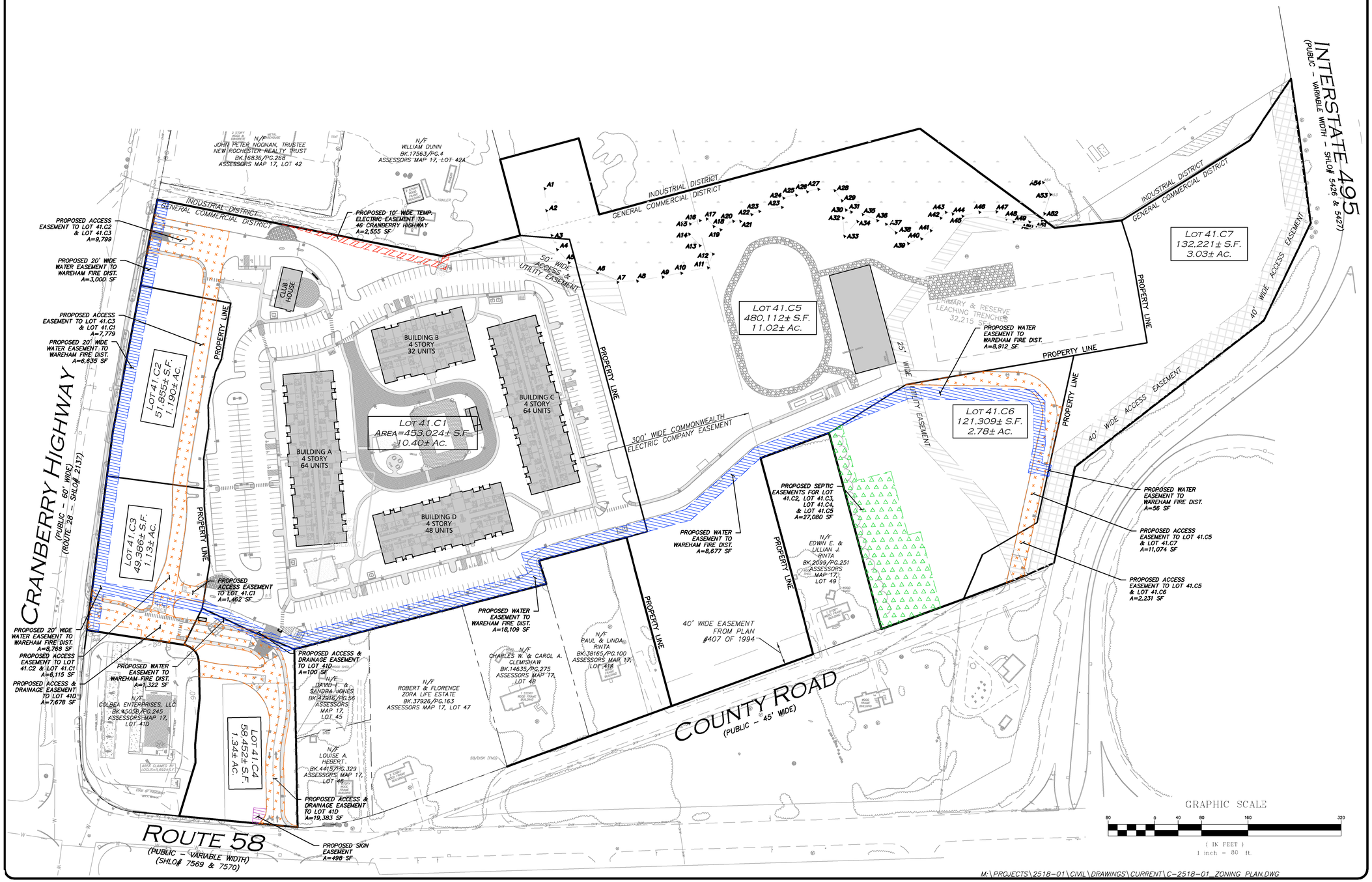

M:\PROJECTS\2518-01\CIVIL\DRAWINGS\CURRENT\C-2518-01_ZONING_PLAN.DWG

APPROVED BY
TOWN OF ROCHESTER PLANNING BOARD

DATE SUBMITTED: _____

DATE ENDORSED: _____

DATE APPROVED: _____

_____

_____

_____

_____

_____

_____

TOWN OF ROCHESTER PLANNING BOARD

ISSUED FOR REVIEW
10-25-2019 REV. 6:12-01-2020

COMMONWEALTH OF MASSACHUSETTS
PHILIP L. CORDEIRO
CIVIL
NO. 47083
REGISTERED PROFESSIONAL ENGINEER

Philip L Cordeiro
c=US, o=Allen and Major Associates Inc., ou=A01410C0000017598B4F D0002012, cn=Philip L Cordeiro
2021.01.26 14:19:07 -05'00'

PROFESSIONAL ENGINEER FOR
ALLEN & MAJOR ASSOCIATES, INC.

REV	DATE	DESCRIPTION
6	12-01-2020	PER PLANNING BOARD PEER REVIEW COMMENTS
5	10-23-2020	PER PLANNING BOARD PEER REVIEW COMMENTS
4	10-02-2020	PER PLANNING BOARD PEER REVIEW COMMENTS
3	07-31-2020	PER PLANNING BOARD PEER REVIEW COMMENTS
2	07-09-2020	PER NOI PEER REVIEW COMMENTS
1	05-18-2020	PER NOI PEER REVIEW COMMENTS

APPLICANT\OWNER:
STEEN
REALTY AND DEVELOPMENT CORPORATION
3 LEDGEWOOD BOULEVARD DARTMOUTH, MA 02747

PROJECT:
ROCHESTER CROSSROADS
SMART GROWTH DEVELOPMENT
CRANBERRY HIGHWAY
ROCHESTER, MA

PROJECT NO.	2518-01	DATE:	10-25-2019
SCALE:	1" = 80'	DWG. NAME:	C2518-01_
DESIGNED BY:	PGM/CMcC	CHECKED BY:	PC

PREPARED BY:
ALLEN & MAJOR ASSOCIATES, INC.
civil engineering ◆ land surveying
environmental consulting ◆ landscape architecture
www.allenmajor.com
10 MAIN STREET
LAKEVILLE MA 02347
TEL: (508) 523-1010
FAX: (508) 523-6309

WOBURN, MA ◆ LAKEVILLE, MA ◆ MANCHESTER, NH

THIS DRAWING HAS BEEN PREPARED IN DIGITAL FORMAT. CLIENT/CLIENT'S REPRESENTATIVE OR CONSULTANTS MAY BE PROVIDED COPIES OF DRAWINGS AND SPECIFICATIONS FOR HIS/HER INFORMATION AND/OR SPECIFIC USE ON THIS PROJECT. DUE TO THE POTENTIAL THAT THE PROVIDED INFORMATION MAY BE MODIFIED UNINTENTIONALLY OR OTHERWISE, ALLEN & MAJOR ASSOCIATES, INC. MAY REMOVE ALL INDICATION OF THE DOCUMENT'S AUTHORSHIP ON THE DIGITAL MEDIA. PRINTED REPRESENTATIONS OR PORTABLE DOCUMENT FORMAT OF THE DRAWINGS AND SPECIFICATIONS ISSUED SHALL BE THE ONLY RECORD COPIES OF ALLEN & MAJOR ASSOCIATES, INC.'S WORK PRODUCT.

DRAWING TITLE:
EASEMENT PLAN

SHEET No.
C-002

Copyright©2020 Allen & Major Associates, Inc.
All Rights Reserved

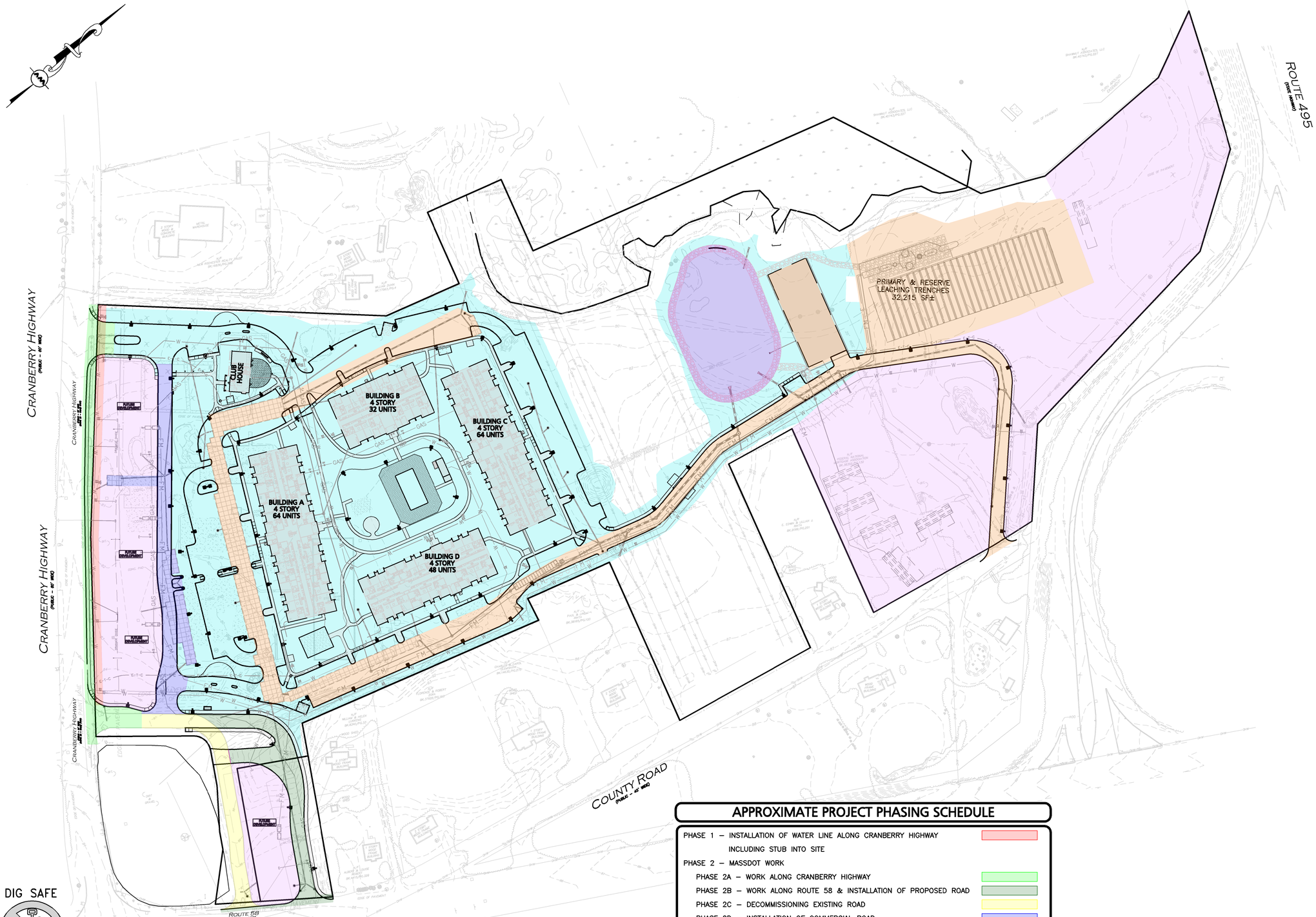

DIG SAFE

BEFORE YOU DIG
CALL 811 OR
1-888-DIG-SAFE
1-888-344-7233

APPROXIMATE PROJECT PHASING SCHEDULE

- PHASE 1 – INSTALLATION OF WATER LINE ALONG CRANBERRY HIGHWAY INCLUDING STUB INTO SITE
- PHASE 2 – MASSDOT WORK
  - PHASE 2A – WORK ALONG CRANBERRY HIGHWAY
  - PHASE 2B – WORK ALONG ROUTE 58 & INSTALLATION OF PROPOSED ROAD
  - PHASE 2C – DECOMMISSIONING EXISTING ROAD
  - PHASE 2D – INSTALLATION OF COMMERCIAL ROAD
- PHASE 3 – INFRASTRUCTURE WORK
  - PHASE 3A – INSTALLATION OF BASIN
  - PHASE 3B – INSTALLATION OF DRAINAGE & SEWER SYSTEM
- PHASE 4 – RESIDENTIAL CONSTRUCTION
- FUTURE DEVELOPMENT

GRAPHIC SCALE

80 0 40 80 160 320

(IN FEET)
1 inch = 80 ft.

M:\PROJECTS\2518-01\CIVIL\DRAWINGS\CURRENT\C-2518-01_PHASING_PLAN.DWG

APPROVED BY
TOWN OF ROCHESTER PLANNING BOARD

DATE SUBMITTED: _____

DATE ENDORSED: _____

DATE APPROVED: _____

_____

_____

_____

_____

_____

_____

TOWN OF ROCHESTER PLANNING BOARD

ISSUED FOR REVIEW
10-25-2019 REV. 6:12-01-2020

COMMONWEALTH OF MASSACHUSETTS
PHILIP L. CORDEIRO
CIVIL
NO. 47083
REGISTERED PROFESSIONAL ENGINEER

Philip L Cordeiro
c=US, o=Allen and Major Associates Inc., ou=A01410C0000017598BB4FD00002012, cn=Philip L Cordeiro
2021.01.26 14:19:41 -05'00'

PROFESSIONAL ENGINEER FOR
ALLEN & MAJOR ASSOCIATES, INC.

REV	DATE	DESCRIPTION
6	12-01-2020	PER PLANNING BOARD PEER REVIEW COMMENTS
5	10-23-2020	PER PLANNING BOARD PEER REVIEW COMMENTS
4	10-02-2020	PER PLANNING BOARD PEER REVIEW COMMENTS
3	07-31-2020	PER PLANNING BOARD PEER REVIEW COMMENTS
2	07-09-2020	PER NOI PEER REVIEW COMMENTS
1	05-18-2020	PER NOI PEER REVIEW COMMENTS

APPLICANT\OWNER:

STEEN
REALTY AND DEVELOPMENT CORPORATION
3 LEDGEWOOD BOULEVARD DARTMOUTH, MA 02747

PROJECT:

ROCHESTER CROSSROADS
SMART GROWTH DEVELOPMENT
CRANBERRY HIGHWAY
ROCHESTER, MA

PROJECT NO.	2518-01	DATE:	10-25-2019
SCALE:	1" = 80'	DWG. NAME:	C2518-01_
DESIGNED BY:	PGM/CMcC	CHECKED BY:	PC

PREPARED BY:

ALLEN & MAJOR ASSOCIATES, INC.
civil engineering ◆ land surveying
environmental consulting ◆ landscape architecture
www.allenmajor.com
10 MAIN STREET
LAKEVILLE MA 02347
TEL: (508) 523-1010
FAX: (508) 523-6309

WOBURN, MA ◆ LAKEVILLE, MA ◆ MANCHESTER, NH

THIS DRAWING HAS BEEN PREPARED IN DIGITAL FORMAT. CLIENT/CLIENT'S REPRESENTATIVE OR CONSULTANTS MAY BE PROVIDED COPIES OF DRAWINGS AND SPECIFICATIONS FOR HIS/HER INFORMATION AND/OR SPECIFIC USE ON THIS PROJECT. DUE TO THE POTENTIAL THAT THE PROVIDED INFORMATION MAY BE MODIFIED UNINTENTIONALLY OR OTHERWISE, ALLEN & MAJOR ASSOCIATES, INC. MAY REMOVE ALL INDICATION OF THE DOCUMENT'S AUTHORSHIP ON THE DIGITAL MEDIA. PRINTED REPRESENTATIONS OR PORTABLE DOCUMENT FORMAT OF THE DRAWINGS AND SPECIFICATIONS ISSUED SHALL BE THE ONLY RECORD COPIES OF ALLEN & MAJOR ASSOCIATES, INC.'S WORK PRODUCT.

DRAWING TITLE:

APPROXIMATE PHASING PLAN

SHEET No.

C-003

Copyright©2020 Allen & Major Associates, Inc. All Rights Reserved

NOTES

GENERAL NOTES:

1. TOPOGRAPHIC INFORMATION AND EXISTING SITE FEATURES WERE OBTAINED FROM AN ACTUAL FIELD SURVEY PERFORMED BY ALLEN & MAJOR ASSOCIATES, INC, 100 COMMERCE WAY, WOBURN, MASSACHUSETTS ON OR ABOUT DATE 02/25/2013.
2. ZONING DISTRICT IS GENERAL COMMERCIAL (GC).
3. OVERALL LOT SIZE: 30.89± ACRES
4. DURING CONSTRUCTION, ALL VEHICLES MUST BE PARKED ON SITE.
5. DURING CONSTRUCTION, ALL STAGING AND DELIVERIES WILL OCCUR ON SITE.
6. THIS PROJECT WILL BE SERVED BY PUBLIC WATER AND PRIVATE SEWER AND PRIVATE, NATURAL GAS, TELEPHONE, CABLE AND ELECTRIC. ALL UTILITY LINES WILL BE INSTALLED UNDERGROUND UNLESS OTHERWISE NOTED.
7. THE CONTRACTOR IS SPECIFICALLY CAUTIONED THAT THE LOCATION AND/OR ELEVATION OF EXISTING UTILITIES AND STRUCTURES AS SHOWN ON THESE PLANS IS BASED ON RECORDS OF VARIOUS UTILITY COMPANIES AND WHERE POSSIBLE, MEASUREMENTS TAKEN IN THE FIELD. THIS INFORMATION IS NOT TO BE RELIED ON AS BEING EXACT OR COMPLETE. THE LOCATION OF ALL UNDERGROUND UTILITIES AND STRUCTURES SHALL BE VERIFIED IN THE FIELD BY THE CONTRACTOR PRIOR TO THE START OF CONSTRUCTION. THE CONTRACTOR MUST CONTACT THE APPROPRIATE UTILITY COMPANY, ANY GOVERNING PERMITTING AUTHORITY, AND "DIGSAFE" AT LEAST 72 HOURS PRIOR TO ANY EXCAVATION WORK TO REQUEST EXACT FIELD LOCATION OF UTILITIES AND THE ENGINEER SHALL BE NOTIFIED IN WRITING OF ANY UTILITIES INTERFERING WITH THE PROPOSED CONSTRUCTION AND APPROPRIATE REMEDIAL ACTION TAKEN BEFORE PROCEEDING WITH THE WORK. IT SHALL BE THE RESPONSIBILITY OF THE CONTRACTOR TO RELOCATE ALL EXISTING UTILITIES WHICH CONFLICT WITH THE PROPOSED IMPROVEMENTS SHOWN ON THE PLANS AT NO ADDITIONAL COST.
8. ALL PROPOSED MAIN BUILDING ENTRANCES AND WALKS SHALL BE HANDICAP ACCESSIBLE PER FEDERAL ADA & MA-AAB REGULATIONS.
9. ALL SITE WORK DONE FOR THIS PROJECT SHALL BE IN STRICT ACCORDANCE WITH THE SITE PLANS AND SITE WORK SPECIFICATIONS FOR CONSTRUCTION.
10. ANY DAMAGE TO PRIVATE OR PUBLIC PROPERTIES DUE TO THE CONTRACTOR'S ACTIVITIES SHALL BE REPAIRED AND RESTORED BY THE CONTRACTOR AT THEIR OWN EXPENSE.
11. ALL PROPERTY MARKERS AND STREET LINE MONUMENTS SHALL BE PROPERLY PROTECTED DURING CONSTRUCTION. ANY DAMAGE TO THESE ITEMS SHALL BE REPAIRED AND RESTORED BY A SURVEYOR REGISTERED IN THE STATE OF MASSACHUSETTS AT THE CONTRACTOR'S EXPENSE.
12. ALL APPLICABLE PERMITS AND AN APPROVED SET OF PLANS SHALL BE AVAILABLE AT THE CONSTRUCTION SITE.
13. THE CONTRACTOR IS RESPONSIBLE FOR SCHEDULING A PRE-CONSTRUCTION MEETING THE WITH THE APPROPRIATE CITY DEPARTMENTS, THE APPROPRIATE UTILITY COMPANIES, THE OWNER AND OWNER'S REPRESENTATIVE. THE MEETING SHALL TAKE PLACE PRIOR TO THE START OF CONSTRUCTION AND THE CONTRACTOR MUST PROVIDE 48 HOURS NOTICE TO ALL ATTENDEES PRIOR TO THE START OF THE MEETING.
14. APPROPRIATE WARNING SIGNS, MARKERS, BARRICADES AND/OR FLAG MEN SHALL BE PROVIDED TO REGULATE TRAFFIC. CONSTRUCTION TRAFFIC CONTROLS SHALL BE IMPLEMENTED AND OPERATED ACCORDING TO THE MASS DEPARTMENT OF TRANSPORTATION, THE MANUAL ON UNIFORM TRAFFIC CONTROL DEVICES (MUTCD) AND THE LOCAL AUTHORITY.
15. THE CONTRACTOR IS RESPONSIBLE FOR OBTAINING ADDITIONAL BENCHMARK INFORMATION IF REQUIRED. THE CONTRACTOR IS RESPONSIBLE FOR LOCATING AND PROTECTING ALL EXISTING BENCHMARKS. IF IT IS NECESSARY TO RELOCATE A BENCHMARK, IT SHALL BE RELOCATED BY A MASSACHUSETTS PROFESSIONAL LAND SURVEYOR AND DONE SO AT THE CONTRACTOR'S EXPENSE.
16. ALL BUILDING DIMENSIONS ARE MEASURED TO THE OUTSIDE FACE OF THE BUILDING.
17. ALL RADII ARE 3 FEET UNLESS OTHERWISE NOTED.
18. ALL PARKING LOT AND AISLE DIMENSIONS ARE TAKEN FROM THE FACE OF CURB AND INDICATE EDGE OF PAVEMENT.
19. CONSTRUCTION DURING WET WEATHER OR WINTER CONDITIONS IS TO BE ANTICIPATED AND PROVISIONS TO ADEQUATELY ADDRESS THESE CONDITIONS SHALL BE THE RESPONSIBILITY OF THE CONTRACTOR AT NO ADDITIONAL COST.
20. THE CONTRACTOR IS RESPONSIBLE FOR OBTAINING AND PAYING FOR ANY PERMITS AND/OR CONNECTION FEES REQUIRED TO CARRY OUT THE WORK INCLUDING BUT NOT LIMITED TO DEMOLITION.
21. DISPOSAL OF ALL DEMOLISHED MATERIALS INCLUDING EXISTING MISC. CONSTRUCTION DEBRIS IS THE RESPONSIBILITY OF THE CONTRACTOR AND MUST BE DISPOSED OF OFF-SITE IN ACCORDANCE WITH ALL FEDERAL, STATE, AND LOCAL MUNICIPAL REQUIREMENTS AT NO ADDITIONAL COST.
22. ALL DISTURBED AREAS NOT NOTED TO RECEIVE OTHER TREATMENT ARE TO RECEIVE SIX INCHES (6") MINIMUM OF TOPSOIL & SEED, AND BE MAINTAINED UNTIL ESTABLISHED & ACCEPTED.
23. EXISTING STRUCTURES WITHIN CONSTRUCTION LIMITS ARE TO BE PROTECTED, ABANDONED, REMOVED OR RELOCATED AS NECESSARY.
24. CONTRACTOR SHALL BE RESPONSIBLE FOR ALL RELOCATIONS, INCLUDING BUT NOT LIMITED TO, ALL UTILITIES, STORM DRAINAGE, SIGNS, & POLES, ETC. AS REQUIRED. ALL WORK SHALL BE IN ACCORDANCE WITH THE LOCAL MUNICIPALITY'S GOVERNING AUTHORITY'S SPECIFICATIONS AND SHALL BE APPROVED BY SAME.
25. THE CONTRACTOR SHALL COORDINATE WITH ALL UTILITY COMPANIES TO DETERMINE EXACT POINT OF SERVICE CONNECTION AND DISCONNECTION AT EXISTING UTILITY.
26. CONTRACTOR IS RESPONSIBLE FOR DIGGING TEST HOLES AND VERIFYING ANY EXISTING UTILITY OR STRUCTURE PRIOR TO CONSTRUCTION. CONTRACTOR SHALL VERIFY THAT BASED ON EXACT LOCATION OF EXISTING UTILITIES, THERE ARE NO CONFLICTS BETWEEN THE EXISTING AND THE PROPOSED UTILITIES/DRAINAGE STRUCTURES.
27. THE CONTRACTOR SHALL ADHERE TO ALL PERMIT CONDITIONS PROVIDED BY ALL GOVERNING AGENCIES AT NO ADDITIONAL COSTS. THIS INCLUDES BUT IS NOT LIMITED TO BUILDING PERMITS, DEMOLITION PERMITS, PLUMBING, GAS, AND ELECTRICAL PERMITS. PERMITS FROM THE PLANNING BOARD OR CITY COUNCIL.
28. DURING EXCAVATION, ANY EXISTING EARTH CUT MATERIALS THAT DO NOT MEET THE "ORDINARY FILL" SPECIFICATIONS OR "LOAM" SPECIFICATIONS AND CANNOT BE REUSED SHALL BE REMOVED OFFSITE BY THE CONTRACTOR AT NO ADDITIONAL COST TO THE OWNERS. MATERIAL WHICH DOES NOT MEET THE SPECIFICATION INCLUDES ALL BOULDERS, ROCKS, CONSTRUCTION DEBRIS, AND MISC. MATERIAL. PRIOR TO REUSE, CONTRACTOR TO PROVIDE TESTING REPORT OF SIEVE ANALYSIS TO ENGINEER FOR APPROVAL. CONTRACTOR CAN AMEND MATERIALS AND CONTINUE TO RETEST AS NECESSARY AT NO ADDITIONAL COST TO OWNER. AFTER AMENDING, IF MATERIAL STILL DOES NOT MEET THE SPECIFICATIONS, IT IS TO BE REMOVED FROM SITE AT NO ADDITIONAL COST TO THE OWNER AND IN ACCORDANCE WITH ALL FEDERAL, STATE, AND LOCAL LAWS AND REGULATIONS.
29. PROPOSED SIGNAGE LOCATIONS SHALL BE CONFIRMED BY THE ROCHESTER PLANNING BOARD AS PART OF THE SITE PLAN REVIEW PROCESS. SIGNAGE DETAILS SHALL BE REVIEWED AND APPROVED BY THE ZONING BOARD OF APPEALS PRIOR TO FABRICATION OR INSTALLATION. ALL PROPOSED SIGNAGE MUST MEET THE REQUIREMENTS OF THE ZONING CODE.

GRADING & DRAINAGE NOTES:

1. EXISTING PAVEMENT SHALL BE SAW-CUT AND PAVEMENT JOINT SHALL BE INSTALLED WHERE NECESSARY TO ENSURE A SMOOTH CONTINUOUS GRADE.
2. ALL GRADING OPERATIONS SHALL BE COORDINATED WITH THE APPROPRIATE UTILITY COMPANIES.
3. IN LANDSCAPED AREAS THE TOP ELEVATION OF MANHOLES SHALL MATCH THE FINISH GRADE OF THE TOPSOIL. IN PAVED AREAS THE TOP ELEVATIONS OF MANHOLES SHALL MATCH FINISH GRADE.
4. ALL AREAS DISTURBED DURING CONSTRUCTION SHALL BE STABILIZED AS SOON AS POSSIBLE UPON COMPLETION OF CONSTRUCTION WORK IN THE AREA.
5. TEMPORARY TUBULAR BARRIER PROTECTION AND/OR SILT SACKS SHALL BE INSTALLED AND MAINTAINED AT EXISTING DRAINAGE STRUCTURES DURING CONSTRUCTION, TO PREVENT SEDIMENT LADEN RUNOFF FROM ENTERING THE DRAINAGE SYSTEM.
6. CONTRACTOR IS RESPONSIBLE FOR DEMOLITION OF EXISTING STRUCTURES INCLUDING REMOVAL OF ANY EXISTING UTILITIES SERVING THE STRUCTURE PER DEMOLITION PLAN.
7. ALL CATCH BASINS, MANHOLES, INFILTRATION SYSTEMS, AND WATER QUALITY STRUCTURES ARE TO BE CLEANED TO REMOVE ALL CONSTRUCTION SILT AND DEBRIS PRIOR TO FINAL APPROVAL.
8. IF ANY EXISTING UTILITY STRUCTURES TO REMAIN ARE DAMAGED DURING CONSTRUCTION, IT SHALL BE THE CONTRACTOR'S RESPONSIBILITY TO REPAIR AND/OR REPLACE THE EXISTING STRUCTURE AS NECESSARY TO RETURN IT TO EXISTING CONDITIONS OR BETTER AT NO ADDITIONAL COST.
9. ALL STORM PIPES ENTERING STRUCTURES SHALL BE GROUTED TO ENSURE CONNECTION AT STRUCTURE IS WATERTIGHT.
10. ALL STORM DRAIN MANHOLES SHALL HAVE TRAFFIC BEARING RING & COVERS & SHALL BE LABELED "DRAIN".
11. THE CONTRACTOR SHALL ADHERE TO ALL TERMS & CONDITIONS AS OUTLINED IN THE GENERAL N.P.D.E.S. PERMIT FOR STORM WATER DISCHARGE ASSOCIATED WITH CONSTRUCTION ACTIVITIES.
12. CONTRACTOR SHALL ENSURE POSITIVE DRAINAGE AWAY FROM BUILDINGS FOR ALL NATURAL AND PAVED AREAS.
13. CONTRACTOR SHALL APPLY STABILIZATION FABRIC TO ALL SLOPES STEEPER THAN 3H:1V.
14. ALL DRAINAGE SYSTEM COMPONENTS SHALL CONFORM TO LOCAL REQUIREMENTS.

UTILITY NOTES:

1. THE LATEST STANDARDS OF THE LOCAL MUNICIPALITY SHALL BE FOLLOWED WHEN INSTALLING ANY STORM DRAIN WORK. STORM DRAIN WORK WILL BE INSPECTED BY THE LOCAL GOVERNING AUTHORITY PERSONNEL AND ALL COSTS SHALL BE THE RESPONSIBILITY OF THE CONTRACTOR.
2. WHERE AN EXISTING UTILITY IS FOUND TO CONFLICT WITH THE PROPOSED WORK, THE LOCATION, ELEVATION AND SIZE OF THE UTILITY SHALL BE ACCURATELY DETERMINED WITHOUT DELAY BY THE CONTRACTOR, AND THE INFORMATION FURNISHED TO THE ENGINEER FOR RESOLUTION.
3. ABANDONED EXISTING UTILITIES AND UTILITIES TO BE ABANDONED SHALL EITHER BE ABANDONED IN PLACE AS NOTED OR SHALL BE REMOVED AND DISPOSED OF AS SPECIFIED. ALL UTILITIES SCHEDULED FOR ABANDONMENT OR REMOVAL AND DISPOSAL MUST BE COORDINATED BY THE CONTRACTOR WITH THE RESPECTIVE UTILITY OWNER. WHEN ABANDONED UTILITIES ARE TO BE LEFT IN PLACE, PLUG OR CAP THE ENDS OF THE CONDUITS AND PIPES. REMOVE ABANDONED UTILITY MANHOLES, JUNCTION BOXES AND SIMILAR STRUCTURES TO A MINIMUM DEPTH OF 4 FEET BELOW FINISHED GRADE AND PUNCTURE OR BREAK THE BOTTOM SLABS OF MANHOLES AND SIMILAR STRUCTURE TO ALLOW DRAINAGE. BACKFILL AND COMPACT EXCAVATIONS RESULTING FROM REMOVAL OF UTILITY FACILITATES, AS REQUIRED TO RESTORE THE ORIGINAL GRADE.
4. THE CONTRACTOR SHALL MAKE ARRANGEMENTS FOR THE ALTERATION AND ADJUSTMENTS OF NATURAL GAS, ELECTRIC, TELEPHONE AND ANY OTHER UTILITY BY THE UTILITY OWNER.
5. THE CONTRACTOR SHALL USE THE FOLLOWING PIPE MATERIALS:
   - DRAIN - HDPE (HIGH DENSITY CORRUGATED POLYETHYLENE PIPE WITH SMOOTH INNER WALL), ASTM D2321 (UNLESS OTHERWISE SPECIFIED ON PLAN)
8. BEFORE UTILITY WORK BEGINS, THE CONTRACTOR WILL COORDINATE WITH THE LOCAL MUNICIPALITY FOR THE APPROPRIATE PERMIT AND INSPECTION FEES.
9. ALL FILL MATERIAL IS TO BE IN PLACE, AND COMPACTED BEFORE INSTALLATION OF PROPOSED UTILITIES.
10. CONTRACTOR SHALL NOTIFY THE UTILITY AUTHORITY'S INSPECTORS 72 HOURS BEFORE CONNECTING TO ANY EXISTING LINE.
11. MINIMUM TRENCH WIDTH SHALL BE 2 FEET.
12. CONTRACTOR SHALL MAINTAIN A MINIMUM OF 5'-0" COVER AND A MAXIMUM OF 8'-0" COVER ON ALL WATERLINES.
13. IN THE EVENT OF A VERTICAL CONFLICT BETWEEN WATERLINES, SANITARY LINES, STORM LINES AND GAS LINES (EXISTING AND PROPOSED), THE SANITARY LINE SHALL BE DUCTILE IRON PIPE WITH MECHANICAL JOINTS AT LEAST 10 FEET ON BOTH SIDES OF CROSSING, THE WATERLINE SHALL HAVE MECHANICAL JOINTS WITH APPROPRIATE THRUST BLOCKING AS REQUIRED TO PROVIDE A MINIMUM OF 18" CLEARANCE BETWEEN THE PIPES. WHERE THE WATERLINE IS LESS THAN THE 18" VERTICAL CLEARANCE AND MEETING 10' HORIZONTAL CLEARANCE CANNOT BE MET, THE WATER MUST BE ENCASED IN CONCRETE.
14. ALL CONCRETE FOR ENCASEMENTS SHALL HAVE A MINIMUM 28 DAY COMPRESSION STRENGTH OF 3000 P.S.I.
15. CONTRACTOR IS RESPONSIBLE FOR COMPLYING WITH THE SPECIFICATIONS OF THE LOCAL AUTHORITIES WITH REGARDS TO MATERIALS AND INSTALLATION OF THE WATER, SEWER, GAS AND ELECTRICAL AND TELECOMMUNICATIONS LINES.
16. ALL NECESSARY INSPECTIONS AND/OR CERTIFICATIONS REQUIRED BY CODES AND/OR UTILITY SERVICE COMPANIES SHALL BE PERFORMED PRIOR TO ANNOUNCED BUILDING POSSESSION AND THE FINAL CONNECTION OF SERVICE.
17. DRAWINGS DO NOT NECESSARILY SHOW ALL EXISTING UTILITIES.
18. WORK ON ADJACENT STREETS IS SUBJECT TO PERMIT REVIEW, COORDINATION, AND INSPECTION BY MASSDOT.
19. CONTRACTOR TO COORDINATE ALL NECESSARY INSPECTIONS WITH APPROPRIATE PARTIES.

ABBREVIATIONS

ABAN	ABANDON
ADJ	ADJUST
B	BORING
BC	BOTTOM OF CURB
BIT	BITUMINOUS
BCB	BITUMINOUS CONCRETE BERM
BLDG	BUILDING
BM	BENCH MARK
BOS	BOTTOM OF SLOPE
BOW	BOTTOM OF WALL
BRK	BRICK
BV&B	BUTTERFLY VALVE & BOX
BVW	BORDERING VEGETATED WETLAND
CATV	CABLE TELEVISION
CB	CATCH BASIN
CF	CUBIC FEET
CFS	CUBIC FEET PER SECOND
CI	CAST IRON (PIPE)
CL	CENTERLINE
CLDI	CEMENT LINED DUCTILE IRON (PIPE)
CM	CONSTRUCTION MANAGER
CMP	CORRUGATED METAL PIPE
CO	CLEAN OUT
CONC	CONCRETE
CONST	CONSTRUCTION
CONT	CONTRACTOR
CRD	COORDINATE
CPP	CORRUGATED POLYETHYLENE PIPE
CUL	CULVERT
CY	CUBIC YARD
DB	DISTRIBUTION BOX
DBL	DOUBLE
DEM	DEMOLISH
DET	DETENTION
DI	DUCTILE IRON (PIPE)
DIA	DIAMETER
DIM	DIMENSION
DMH	DRAIN MANHOLE
DW	DOMESTIC WATER (OR DRY WELL)
DWG	DRAWING
DYCL	DOUBLE YELLOW CENTERLINE
EHH	ELECTRIC HANDHOLE
EL	ELEVATION
ELEC	ELECTRIC
EMH	ELECTRIC MANHOLE
EOP	EDGE OF PAVEMENT
EOR	EDGE OF ROAD
EOW	EDGE OF WETLANDS
ETC	ELECTRIC, TELEPHONE, CABLE
EXIST	EXISTING
EXT	EXTERIOR
FA	FIRE ALARM
FCC	FLUSH CONCRETE CURB
FES	FLARED END SECTION
FFE	FINISH FLOOR ELEVATION
FLNP	FIRE LANE NO PARKING
FPA	FOOT PRINT AREA
FPS	FEET PER SECOND
FS	FIRE SERVICE
FT	FOOT/FEET
GC	GENERAL CONTRACTOR
GEN	GENERAL
GG	GAS GATE
GR	GUIDE RAIL
GRAN	GRANITE
GV	GATE VALVE
GV&B	GATE VALVE & BOX
GW	GROUND WATER
HCR	HANDICAP RAMP
HOR	HORIZONTAL
HT	HEIGHT
HW	HEADWALL
HWY	HIGHWAY
HYD	HYDRANT
ID	INSIDE DIAMETER
IN	INCHES
INCL	INCLUDE
INST	INSTALLED
INV, I.E.	INVERT, INVERT ELEVATION
L	LENGTH
LB	LEACHING BASIN
LP	LIGHT POLE
MAT	MATERIAL
MAX	MAXIMUM
MH	MANHOLE
MIN	MINIMUM
MISC	MISCELLANEOUS
MTD	MOUNTED
MW	MONITORING WELL
N	NORTH
NIC	NOT IN CONTRACT
NO	NUMBER
NTS	NOT TO SCALE
OC	ON CENTER
OD	OUTSIDE DIAMETER
OHW	OVERHEAD WIRE
OVHD	OVERHEAD
OW	OBSERVATION WELL
PC	POINT OF CURVATURE
PCC	PRECAST CONCRETE CURB
PI	POINT OF INTERSECTION
PKG	PARKING
PL	PROPERTY LINE
PLMB	PLUMBING
POC	POINT ON CURVATURE
POT	POINT ON TANGENT
PRC	POINT OF REVERSE CURVATURE
PROP, P	PROPOSED
PT	POINT (OR POINT OF TANGENT)
PVC	POLYVINYL CHLORIDE (PIPE)
R&R	REMOVE & RESET/REPLACE
R&S	REMOVE & STACK
RCP	REINFORCED CONCRETE PIPE
RD	ROAD (OR ROOF DRAIN)
RED	REDUCER
RELOC	RELOCATE
REM	REMOVE
RET	RETAIN, RETAINING OR RETENTION
ROW	RIGHT OF WAY
RR	RAILROAD
RWL	RAIN WATER LEADER
RWY	ROADWAY
SD	SUBDRAIN
SF	SQUARE FEET
SGC	SLOPED GRANITE CURB
SMH	SEWER MANHOLE
SP	STANDPIPE
SPEC	SPECIFICATION
STA	STATION
STC	STORMCEPTOR
STD	STANDARD
STRTL	STRUCTURAL
SWEL	SOLID WHITE EDGE LINE
SW	SIDEWALK
SWLL	SOLID WHITE LANE LINE
SYCL	SOLID YELLOW CENTERLINE
TB	TEST BORING
TC	TOP OF CURB
TD	TRENCH DRAIN
TEL, T	TELEPHONE
TMH	TELEPHONE MANHOLE
TOS	TOP OF SLOPE
TOW	TOP OF WALL
TP	TEST PIT
TS&V	TAPPING SLEEVE & VALVE
TYP	TYPICAL
UD	UNDERDRAIN
UL	UNDERWRITERS LABORATORY
UP	UTILITY POLE
VCP	VITRIFIED CLAY PIPE
VERT	VERTICAL
VGC	VERTICAL GRANITE CURB
WD	WOOD
WG	WATER GATE
WM	WATER MAIN
WMH	WATER MANHOLE
WSO	WATER SHUTOFF

DIG SAFE

BEFORE YOU DIG CALL 811 OR 1-888-DIG-SAFE 1-888-344-7233

M:\PROJECTS\2518-01\CIVIL\DRAWINGS\CURRENT\C-2518-01_ABBREVIATIONS & NOTES.DWG

APPROVED BY
TOWN OF ROCHESTER PLANNING BOARD

DATE SUBMITTED: _____

DATE ENDORSED: _____

DATE APPROVED: _____

_____

_____

_____

_____

_____

_____

TOWN OF ROCHESTER PLANNING BOARD

ISSUED FOR REVIEW
10-25-2019 REV. 6:12-01-2020

COMMONWEALTH OF MASSACHUSETTS
PHILIP L. CORDEIRO
CIVIL
NO. 47083
REGISTERED PROFESSIONAL ENGINEER

Philip L Cordeiro
c=US, o=Allen and Major Associates Inc., ou=A01410C00000175988B4F D00002012, cn=Philip L Cordeiro
2021.01.26 14:20:18 -05'00'

PROFESSIONAL ENGINEER FOR
ALLEN & MAJOR ASSOCIATES, INC.

REV	DATE	DESCRIPTION
6	12-01-2020	PER PLANNING BOARD PEER REVIEW COMMENTS
5	10-23-2020	PER PLANNING BOARD PEER REVIEW COMMENTS
4	10-02-2020	PER PLANNING BOARD PEER REVIEW COMMENTS
3	07-31-2020	PER PLANNING BOARD PEER REVIEW COMMENTS
2	07-09-2020	PER NOI PEER REVIEW COMMENTS
1	05-18-2020	PER NOI PEER REVIEW COMMENTS

APPLICANT\OWNER:

STEEN
REALTY AND DEVELOPMENT CORPORATION
3 LEDGEWOOD BOULEVARD DARTMOUTH, MA 02747

PROJECT:

ROCHESTER CROSSROADS
SMART GROWTH DEVELOPMENT
CRANBERRY HIGHWAY
ROCHESTER, MA

PROJECT NO.	2518-01	DATE:	10-25-2019
SCALE:	NONE	DWG. NAME:	C2518-01_
DESIGNED BY:	PGM/CMcC	CHECKED BY:	PC

PREPARED BY:

ALLEN & MAJOR ASSOCIATES, INC.
civil engineering ◆ land surveying
environmental consulting ◆ landscape architecture
www.allenmajor.com
10 MAIN STREET
LAKEVILLE MA 02347
TEL: (508) 523-1010
FAX: (508) 523-6309
WOBURN, MA ◆ LAKEVILLE, MA ◆ MANCHESTER, NH

THIS DRAWING HAS BEEN PREPARED IN DIGITAL FORMAT. CLIENT/CLIENTS REPRESENTATIVE OR CONSULTANTS MAY BE PROVIDED COPIES OF DRAWINGS AND SPECIFICATIONS FOR HIS/HER INFORMATION AND/OR SPECIFIC USE ON THIS PROJECT. DUE TO THE POTENTIAL THAT THE PROVIDED INFORMATION MAY BE MODIFIED UNINTENTIONALLY OR OTHERWISE, ALLEN & MAJOR ASSOCIATES, INC. MAY REMOVE ALL INDICATION OF THE DOCUMENT'S AUTHORSHIP ON THE DIGITAL MEDIA. PRINTED REPRESENTATIONS OR PORTABLE DOCUMENT FORMAT OF THE DRAWINGS AND SPECIFICATIONS ISSUED SHALL BE THE ONLY RECORD COPIES OF ALLEN & MAJOR ASSOCIATES, INC.'S WORK PRODUCT.

DRAWING TITLE: ABBREVIATIONS & NOTES

SHEET No. C-004

Copyright©2020 Allen & Major Associates, Inc.
All Rights Reserved

EROSION CONTROL NOTES

EROSION & SEDIMENTATION CONTROL NOTES:

1. AS CONSTRUCTION DISTURBANCE IS GREATER THAN 1 ACRE, A NATIONAL POLLUTANT DISCHARGE ELIMINATION SYSTEM (NPDES) CONSTRUCTION GENERAL PERMIT NOI, AND STORM WATER POLLUTION PREVENTION PLAN (SWPPP) WILL NEED TO BE SUBMITTED TO THE EPA. THE NPDES PERMIT FOR STORM WATER DISCHARGE, & CONSTRUCTION GENERAL PERMIT NOI WILL BE REQUIRED TO BE SUBMITTED AT LEAST 14 DAYS PRIOR TO COMMENCING CONSTRUCTION BY THE CONTRACTOR.
2. OWNER AND CONTRACTOR ARE RESPONSIBLE FOR COMPLIANCE WITH THE CONSTRUCTION GENERAL PERMIT NOI. WEEKLY SWPPP INSPECTION REPORTS TO BE PERFORMED BY CONTRACTOR. COPIES OF ALL SWPPP INSPECTION REPORTS SHALL BE PROVIDED TO THE LOCAL MUNICIPALITY, EPA, DEP, OR ANY OTHER AUTHORITY REQUESTING WITHIN 3 DAYS OF EACH INSPECTION.
3. EROSION CONTROL SHALL BE INSTALLED PRIOR TO CONSTRUCTION AND SHALL BE ADEQUATE TO MAINTAIN SEDIMENT ON SITE. ANY MODIFICATIONS TO SILT CONTROLS SHOWN ON THE APPROVED PLANS AS A RESULT OF ACTUAL FIELD CONDITIONS OR CONSTRUCTION PRACTICES SHALL BE INSTALLED IN ACCORDANCE WITH B.M.P. (BEST MANAGEMENT PRACTICES) PER THE E.P.A. 2017 "CONSTRUCTION GENERAL PERMIT" MANUAL, AND MASSACHUSETTS 2003 EROSION & SEDIMENT CONTROL GUIDELINES FOR URBAN AND SUBURBAN AREAS, ANY SUCH MODIFICATIONS FROM THE ABOVE MANUALS SHALL BE INSTALLED AS APPROVED BY THE ENGINEER OR THE LOCAL MUNICIPALITY.
4. AREAS OF EXPOSED SOIL UNDERGOING CONSTRUCTION THAT WILL NOT BE COVERED AND OR FINISHED GRADED SHALL BE STABILIZED AS SOON AS PRACTICABLE BUT IN NO CASE MORE THAN 14 DAYS AFTER THE CONSTRUCTION ACTIVITY (UNLESS MUNICIPALITY HAS STRICTER REQUIREMENTS WHICH SHALL BE FOLLOWED) IN THAT PORTION OF THE SITE HAS TEMPORARILY OR PERMANENTLY CEASED. TEMPORARY EROSION CONTROL MEASURES SHALL INCLUDE EROSION CONTROL MESH, NETTING OR MULCH AS DIRECTED BY THE OWNER'S REPRESENTATIVE AND SHOWN ON THE DESIGN PLANS. IF MULCH IS USED, STRAW MULCH SHALL BE APPLIED AT THE RATE OF 4 BALES PER 1,000 SQUARE FEET. APPLICATION AREA SHALL BE SUFFICIENTLY COVERED WITH MULCH TO AVOID ANY VISIBLE SOIL EXPOSURE. MULCH SHALL BE KEPT MOIST TO AVOID LOSS DUE TO WIND. MULCH AND NETTING SHALL BE APPLIED IN THE BASE OF ALL GRASSED WATERWAYS, IN VEGETATIVE SLOPES WHICH EXCEED 15% AND DISTURBED AREAS WITHIN 100 FEET OF WETLANDS OR STREAMS.
5. IF DISTURBED AREAS DO NOT RECEIVE FINAL SEEDING BY OCTOBER 1ST OF THE CONSTRUCTION YEAR, THEN ALL DISTURBED AREAS SHALL BE SEEDED WITH A WINTER COVER CROP AT THE RATE OF 3 LBS PER 1,000 SQUARE FEET. WINTER SEEDING SHALL BE COVERED WITH EROSION CONTROL MESH (MULCH AND NETTING). HEAVY GRADE MATS SHALL BE USED IN THE BASE OF ALL GRASSED WATERWAYS ON VEGETATED SLOPES IN EXCESS OF 15%, AND ANY DISTURBED AREAS WITHIN 100 FEET OF WETLANDS OR STREAMS. MULCH AND NETTING SHALL ALSO BE PROVIDED FOR ADDITIONAL WINTER PROTECTION.
6. ALL TOPSOIL SHALL BE COLLECTED, STOCKPILED, SEEDED WITH RYE AT 3LBS PER 1,000 SQUARE FOOT AND MULCHED, AND REUSED AS REQUIRED. TUBULAR BARRIERS SHALL BE PLACED DOWN GRADIENT FROM STOCKPILED LOAM. LOAM SHALL BE STOCKPILED AT LOCATIONS DESIGNATED BY THE OWNER AND ENGINEER.
7. ALL TUBULAR BARRIERS, SILT SACKS, AND EROSION CONTROL BERMS SHALL BE INSTALLED ACCORDING TO THE SITE PREPARATION PLAN. THESE SHALL BE MAINTAINED DURING DEVELOPMENT TO REMOVE SEDIMENT FROM RUNOFF WATER. ALL THE FILTER BARRIERS AND EROSION CONTROL BERMS SHALL BE INSPECTED AFTER ANY RAINFALL OR RUNOFF EVENT, MAINTAINED AND CLEANED UNTIL ALL AREAS HAVE AT LEAST 85–90% VIGOROUS PERENNIAL COVER OF GRASSES. THE LOCAL CONSERVATION COMMISSION MUST APPROVE THE REMOVAL OR RELOCATION OF ANY OF THE TUBULAR BARRIERS AND FILTER FABRIC. ONCE THE TUBULAR BARRIERS ARE REMOVED THE AREAS ARE TO BE LOAMED AND SEEDED TO ACHIEVE FULL STABILIZATION. RE–SEEDING SHALL BE CARRIED OUT BY THE CONTRACTOR WITH FOLLOW UP INSPECTIONS IN THE EVENT OF ANY FAILURES UNTIL VEGETATION IS ADEQUATELY ESTABLISHED.
8. ADJACENT ROADS SHALL BE PERIODICALLY SWEPT OR WASHED TO AVOID TRACKING MUD, DUST OR DEBRIS FROM THE CONSTRUCTION AREA AS OFTEN AS NECESSARY (WHICH COULD BE ON A DAILY BASIS) TO REMOVE ANY SOIL OR SEDIMENTS AT NO ADDITIONAL COST TO THE OWNER. A WATERING TRUCK WILL BE USED TO PERIODICALLY SPRINKLE CONSTRUCTION AREAS IN ORDER TO KEEP THE LEVEL OF DUST TO A MINIMUM DURING THE DRY MONTHS AT NO ADDITIONAL COST TO THE OWNER.
9. THE CONTRACTOR SHALL USE EXTREME CAUTION TO AVOID ALLOWING SEDIMENTS TO ENTER THE STORM DRAIN SYSTEM DURING CONSTRUCTION. BOTH EXISTING AND PROPOSED CATCH BASIN INLETS SHALL BE PROTECTED DURING CONSTRUCTION BY THE USE SILT SACKS AND/OR TUBULAR BARRIERS AROUND EACH INLET AS NOTED ON THE PLANS. INLET PROTECTION MAY BE REMOVED ONLY AFTER FINISHED AREAS ARE PAVED AND THE VEGETATED SLOPES ARE ESTABLISHED WITH AT LEAST 85–90% OF VIGOROUS PERENNIAL GROWTH.
10. AS APPLICABLE, EROSION CONTROL MESH SHALL BE APPLIED IN ACCORDANCE WITH THE PLANS OVER ALL FINISHED SEEDED AREAS AS SPECIFIED ON THE DESIGN PLANS.
11. AT THE OWNER'S DISCRETION ADDITIONAL EROSION CONTROL MEASURES MAY BE REQUIRED TO MAINTAIN STABILITY OF EARTHWORKS AND FINISHED GRADED AREAS. THE CONTRACTOR, AT HIS EXPENSE, WILL BE RESPONSIBLE FOR PROVIDING AND INSTALLING ANY ADDITIONAL MEASURES AS SPECIFIED BY THE OWNER. THIS INCLUDES BUT IS NOT LIMITED TO REQUESTS BY MA DEP, THE ENGINEER AND THE LOCAL MUNICIPALITY, AS AUTHORIZED BY THE OWNER. FAILURE TO COMPLY WITH THE OWNER'S DIRECTIONS WILL RESULT IN DISCONTINUATION OF CONSTRUCTION ACTIVITIES.
12. INSPECTIONS AND MONITORING MAINTENANCE MEASURES SHALL BE APPLIED AS NEEDED DURING THE ENTIRE CONSTRUCTION CYCLE. WEEKLY INSPECTIONS SHALL BE HELD THROUGH THE DURATION OF CONSTRUCTION ACTIVITY. WEEKLY INSPECTION REPORTS SHALL BE MAINTAINED BY THE CONTRACTOR AND LOCATED IN THE CONTRACTORS FIELD OFFICE ONSITE. IN ADDITION TO THE NORMAL WEEKLY INSPECTIONS, THE CONTRACTOR SHALL PERFORM AN INSPECTION OF ALL EROSION CONTROL MEASURES AFTER EACH RAINFALL OR RUNOFF EVENT, AND PERFORM THE NECESSARY REPAIRS. THE INSPECTIONS SHALL INCLUDE BUT NOT BE LIMITED TO THE SITE'S DOWN STREAM DISCHARGE POINTS.
13. IF ANY EVIDENCE OF SEDIMENTATION IS OBSERVED AT THE STORMWATER MANAGEMENT AREA INLETS, THE CONTRACTOR SHALL, AT HIS OWN EXPENSE, PROVIDE A PLAN TO THE ENGINEER TO REMOVE ANY ACCUMULATED SEDIMENT IN THESE AREAS. THE CONTRACTOR SHALL ALSO IMMEDIATELY PROVIDE ADDITIONAL ON SITE EROSION AND SEDIMENTATION CONTROL MEASURES TO PREVENT FURTHER DEGRADATION OF THE AREA.
14. CONTRACTOR & ALL SITE SUBCONTRACTORS SHALL BE FAMILIAR WITH & FOLLOW ALL APPROVED PERMITS AND CONDITIONS. CONTRACTOR SHALL MAINTAIN A COPY OF ALL APPROVED PERMITS ONSITE. ALL CONDITIONS & RECOMMENDATIONS WITHIN THE APPROVED PERMITS SHALL BE COMPLETED.
15. ALL EROSION MEASURES SHALL BE INSTALLED PRIOR TO CONSTRUCTION AND SHALL BE ADEQUATE TO MAINTAIN SEDIMENT ON SITE. ANY MODIFICATIONS SHALL BE INSTALLED AS DIRECTED BY THE ENGINEER OR THE LOCAL MUNICIPALITY.
16. EROSION AND SEDIMENTATION CONTROL MEASURES SHALL BE MAINTAINED DURING CONSTRUCTION, AND SHALL REMAIN IN PLACE UNTIL ALL SITE WORK IS COMPLETE AND GROUND COVER IS ESTABLISHED.
17. TOP OF STOCKPILES SHALL BE COVERED IN SUCH MANNER THAT STORMWATER DOES NOT INFILTRATE THE MATERIALS AND THEREBY RENDER THE SAME UNSUITABLE FOR FILL USE.

EROSION & SEDIMENTATION CONTROL NOTES (CONTINUED):

18. ALL DISTURBED OR EXPOSED AREAS SUBJECT TO EROSION SHALL BE STABILIZED WITH MULCH OR SEEDED FOR TEMPORARY VEGETATIVE COVER. NO AREA, SUBJECT TO EROSION SHALL BE LEFT DISTURBED AND UNSTABILIZED FOR PERIODS LONGER THAN IS ABSOLUTELY NECESSARY TO CARRY OUT THAT PORTION OF THE CONSTRUCTION WORK OR SIX MONTHS AFTER SOIL HAS BEEN DISTURBED WHICHEVER IS LESS.
19. CULVERT/PIPE INLETS AND OUTFALLS SHALL BE PROTECTED BY TUBULAR BARRIER FILTERS AND STONE CHECK DAMS UNTIL DISTURBED AREAS ARE PERMANENTLY STABILIZED.
20. TUBULAR BARRIER DIKES SHALL BE CONSTRUCTED AT ALL EXISTING & PROPOSED CATCH BASINS. NO SEDIMENTATION SHALL ENTER THE ON–SITE OR OFF–SITE DRAINAGE SYSTEMS AT ANY TIME.
21. ALL EROSION CONTROL MEASURES SHALL BE ROUTINELY INSPECTED, CLEANED AND REPAIRED OR REPLACED AS NECESSARY THROUGHOUT ALL PHASES OF CONSTRUCTION. IN ADDITION, INSPECTIONS SHALL TAKE PLACE WEEKLY AND BEFORE AND AFTER EACH RAINFALL EVENT.
22. ALL PROPOSED SLOPES STEEPER THAN 3:1 SHALL BE STABILIZED WITH JUTE MESH AND PROTECTED FROM EROSION UNTIL WORK IS COMPLETE AND GROUND COVER IS ESTABLISHED.
23. THE CONTRACTOR SHALL KEEP ON SITE AT ALL TIMES ADDITIONAL TUBULAR BARRIERS FOR INSTALLATION AT THE DIRECTION OF THE ENGINEER OR THE TOWN ENGINEER TO MITIGATE ANY EMERGENCY CONDITION.
24. APPLICABLE WORK AND MATERIALS SHALL COMPLY WITH ALL LOCAL, MA DEP, EPA CONSTRUCTION GENERAL PERMIT STANDARDS. ALL CONSTRUCTION SHALL CONFORM TO THE APPLICABLE SITE PLAN REGULATIONS FROM THE LOCAL AND USDA SOIL CONSERVATION SERVICE VEGETATIVE PRACTICES IN SITE DEVELOPMENT.
25. A WATERING TRUCK SHALL BE USED TO PERIODICALLY SPRINKLE CONSTRUCTION AREAS IN ORDER TO KEEP THE LEVEL OF DUST TO A MINIMUM DURING THE DRY MONTHS AND AS REQUIRED.
26. IF DEWATERING IS NECESSARY IT SHALL ONLY BE COMPLETED AS FOLLOWS: THE DISCHARGE SHALL BE STOPPED IMMEDIATELY IF THE RECEIVING AREA SHOWS ANY SIGN OF INSTABILITY OR EROSION. ALL CHANNELS, SWALES, AND DITCHES DUG FOR DISCHARGING WATER FROM THE EXCAVATED AREA SHALL BE STABLE PRIOR TO DIRECTING DISCHARGE TO THEM. IF A CONSTRUCTION EQUIPMENT BUCKET IS USED, IT SHALL EMPTY THE MATERIAL TO A STABLE AREA. NO DEWATERING SHALL OCCUR DURING PERIODS OF INTENSE, HEAVY RAIN. FLOW TO THE SEDIMENT REMOVAL STRUCTURE SHALL NOT EXCEED THE STRUCTURE'S CAPACITY TO SETTLE AND FILTER FLOW OR ITS VOLUME CAPACITY. WHENEVER POSSIBLE, THE DISCHARGE FROM THE SEDIMENT REMOVAL STRUCTURE SHALL DRAIN TO A WELL–VEGETATED BUFFER BY SHEET FLOW WHILE MAXIMIZING THE DISTANCE TO THE NEAREST WATER RESOURCE AND MINIMIZING THE SLOPE OF THE BUFFER AREA. THERE SHALL BE NO DIRECT DISCHARGE TO EXISTING WETLANDS OR STREAMS. ALL DISCHARGE SHALL BE IN COMPLIANCE WITH STATE, LOCAL, AND FEDERAL REQUIREMENTS.
27. INITIATE STABILIZATION OF EXPOSED AREAS IMMEDIATELY IF CONSTRUCTION WORK TEMPORARILY OR PERMANENTLY CEASES.
28. ALL DISCHARGES FROM POLLUTION SOURCES ARE PROHIBITED ONSITE SUCH AS FUELS, WASTEWATER FROM WASH OUT OF CONCRETE, WASTEWATER FROM CLEAN OUT OF PAINTS, FORM RELEASE OILS, SOLVENTS, ADHESIVES, CURING COMPOUNDS, POLLUTANTS USED FOR MAINTENANCE OF VEHICLES AND EQUIPMENT, SOAPS & SOLVENTS, TOXIC OR HAZARDOUS SUBSTANCES, CHEMICALS AND OILS. IF A POLLUTANT IS DISCHARGED IT NEEDS TO BE IMMEDIATELY CLEANED UP BY REMOVING THE CHEMICAL AND AFFECTED SOIL OR AREA OF SPILL FROM THE SITE IN ACCORDANCE WITH BOTH THE MANUFACTURER RECOMMENDATIONS, FEDERAL, STATE, AND LOCAL REQUIREMENTS. DO NOT HOSE DOWN AND SPREAD SPILLED ITEM. ALL CHEMICALS USED ON THE SITE SHALL BE IN LEAK–PROOF CONTAINERS STORED AWAY FROM WETLANDS, SURFACE WATERS, STORMWATER INLETS, AND DRAINAGE MEASURES. SPILL KITS SHALL BE AVAILABLE ONSITE FOR EMERGENCY USE. THERE SHALL BE A SECONDARY CONTAINMENT MEASURE OF ALL CHEMICALS IN ADDITION TO SPILL–PROOF CONTAINERS.
29. PRIOR TO COMMENCEMENT OF CONSTRUCTION, APPLICABLE CONTRACTOR PERSONNEL MUST HAVE AN UNDERSTANDING OF THE EPA CONSTRUCTION GENERAL PERMIT REQUIREMENTS AND THEIR SPECIFIC RESPONSIBILITIES UNDER THE PERMIT. AT A MINIMUM, PERSONNEL MUST BE TRAINED AND UNDERSTAND THE FOLLOWING: LOCATION OF ALL STORMWATER CONTROLS AND HOW TO MAINTAIN THEM, PROCEDURES FOR COMPLYING WITH THE POLLUTION PREVENTION REQUIREMENTS. PROCEDURES FOR CONDUCTING INSPECTIONS, RECORDING FINDINGS, AND TAKING CORRECTIVE ACTION.
30. ALL SEDIMENT TRACKED ONTO ROADWAYS MUST BE REMOVED AT END OF EACH WORK DAY.
31. ALL USE OF CATIONIC TREATMENT CHEMICALS (EXAMPLES INCLUDE POLYMERS, CHITOSAN, CATIONIC PAM, FLOCCULANTS OR OTHER CHEMICAL UTILIZED FOR STABILIZATION) ARE PROHIBITED. IF ALL OTHER AVAILABLE STABILIZATION MEASURES ARE NOT POSSIBLE AND USE OF CATIONIC CHEMICALS IS ABSOLUTELY NECESSARY THE CONTRACTOR WILL NEED TO CONTACT THE EPA NEW ENGLAND OFFICE IN WRITING FOR APPROVAL AND SPECIFIC REQUIREMENTS (MAXIMUM DOSAGE RATE, RESIDUAL TESTING, SPECIFIC LIMITATIONS, ETC) PRIOR TO USE.
32. IF USING NON–VEGETATIVE STABILIZATION MEASURES, IT MUST BE COMPLETED NO LATER THAN 14 DAYS AFTER INITIATING STABILIZATION. ALL AREAS OF EXPOSED SOILS MUST BE COVERED.
33. INSPECTIONS OF EROSION CONTROL MEASURES SHALL BE AT LEAST ONCE EVERY 7 DAYS BY THE CONTRACTOR. AT A MINIMUM INSPECTIONS SHALL INCLUDE ALL DISTURBED AREAS, ALL STORMWATER CONTROLS AND POLLUTION PREVENTION MEASURES, ALL LOCATIONS WHERE STABILIZATION MEASURES HAVE BEEN IMPLEMENTED, EQUIPMENT AND MATERIAL STORAGE AREAS, ALL AREAS WHERE STORMWATER FLOWS AND ALL POINTS OF DISCHARGE. WHEN CORRECTIVE ACTIONS ARE REQUIRED, THE CONTRACTOR MUST IMMEDIATELY TAKE ALL STEPS TO PREVENT POLLUTANT DISCHARGES UNTIL A PERMANENT SOLUTION IS IMPLEMENTED. AS NECESSARY NEW OR MODIFIED CONTROLS MUST BE INSTALLED AND OPERATIONAL, THE REPAIR MUST BE COMPLETED WITHIN 7 DAYS FROM THE TIME OF DISCOVERY. WITHIN 24 HOURS OF A TRIGGERING CONDITION OCCURRING THAT REQUIRES A CORRECTIVE ACTION, A CORRECTIVE ACTION REPORT MUST BE COMPLETED.
34. ALL STORM DRAINAGE PIPING IS TO BE CLEANED WITH PROOF OF ACTIVITY PROVIDED TO OWNER PRIOR TO FIRST OCCUPANCY.

MAINTENANCE:

ALL MEASURES STATED ON THE STORMWATER POLLUTION PREVENTION PLANS, SHALL BE MAINTAINED IN FULLY FUNCTIONAL CONDITION BY CONTRACTOR UNTIL NO LONGER REQUIRED FOR A COMPLETED PHASE OF WORK OR FINAL STABILIZATION OF THE SITE. ALL EROSION AND SEDIMENTATION CONTROL MEASURES SHALL BE CHECKED BY A QUALIFIED PERSON IN ACCORDANCE WITH THE CONTRACT DOCUMENTS OR THE APPLICABLE PERMIT, WHICHEVER IS MORE STRINGENT, AND REPAIRED IN ACCORDANCE WITH THE FOLLOWING:

1. INLET PROTECTION DEVICES AND BARRIERS SHALL BE REPAIRED OR REPLACED IF THEY SHOW SIGNS OF UNDERMINING, OR DETERIORATION.
2. ALL SEEDED AREAS SHALL BE CHECKED REGULARLY TO SEE THAT A HEALTHY STAND OF GRASS IS MAINTAINED. AREAS SHOULD BE FERTILIZED, WATERED, AND RESEEDED AS NEEDED.
3. ALL SEDIMENT CONTROLS SHALL BE REPAIRED TO THEIR ORIGINAL CONDITIONS IF DAMAGED. SEDIMENT SHALL BE REMOVED FROM THE TUBULAR SEDIMENT CONTROLS WHEN IT REACHES HALF THE HEIGHT OF THE CONTROL MEASURE OR AS REQUESTED BY THE OWNER OR ENGINEER.
4. THE CONSTRUCTION ENTRANCES SHALL BE MAINTAINED IN A CONDITION WHICH WILL PREVENT TRACKING OR FLOW OF MUD ONTO PUBLIC RIGHTS–OF–WAY. THIS MAY REQUIRE PERIODIC TOP DRESSING OF THE CONSTRUCTION ENTRANCES AS CONDITIONS DEMAND.
5. THE TEMPORARY PARKING AND STORAGE AREA SHALL BE KEPT IN GOOD CONDITION (SUITABLE FOR PARKING AND STORAGE). THIS MAY REQUIRE PERIODIC TOP DRESSING OF THE TEMPORARY PARKING AS CONDITIONS DEMAND.
6. OUTLET STRUCTURES IN THE SEDIMENTATION BASINS SHALL BE MAINTAINED IN OPERATIONAL CONDITIONS AT ALL TIMES. SEDIMENT SHALL BE REMOVED FROM SEDIMENT BASINS OR TRAPS WHEN THE DESIGN CAPACITY HAS BEEN REDUCED BY 50%.

CONSTRUCTION GENERAL PERMIT NOTES AND NARRATIVE:

NARRATIVE: THE STORMWATER POLLUTION PREVENTION PLANS CONSIST OF THE SITE PREPARATION PLAN TOGETHER WITH AN EXISTING CONDITIONS PLANS, GRADING PLANS, ABBREVIATIONS AND NOTES SHEETS, AND DETAIL SHEETS.

THE EROSION CONTROL PLAN WILL BE IMPLEMENTED TO:

A. TREAT EROSION AS SOON AS POSSIBLE AFTER DISTURBANCE.

B. PREVENT SEDIMENT FROM LEAVING THE CONSTRUCTION AREA AND ENTERING THE RECEIVING WATERS.

C. CONSTRUCTION ACTIVITIES SHALL BE SCHEDULED TO MINIMIZE EROSION.

D. ONLY DISTURB, CLEAR, OR GRADE AREAS NECESSARY FOR CONSTRUCTION.

M:\PROJECTS\2518–01\CIVIL\DRAWINGS\CURRENT\C–2518–01_ABBREVIATIONS & NOTES.DWG

APPROVED BY
TOWN OF ROCHESTER PLANNING BOARD

DATE SUBMITTED: _____

DATE ENDORSED: _____

DATE APPROVED: _____

_____

_____

_____

_____

_____

_____

TOWN OF ROCHESTER PLANNING BOARD

ISSUED FOR REVIEW
10-25-2019 REV. 6:12-01-2020

COMMONWEALTH OF MASSACHUSETTS
PHILIP L CORDEIRO
CIVIL
NO. 47083
REGISTERED PROFESSIONAL ENGINEER

Philip L Cordeiro
c=US, o=Allen and Major Associates Inc., ou=A01410C0000017598B4F D00002012, cn=Philip L Cordeiro
2021.01.26 14:20:42 -05'00'

PROFESSIONAL ENGINEER FOR
ALLEN & MAJOR ASSOCIATES, INC.

REV	DATE	DESCRIPTION
6	12-01-2020	PER PLANNING BOARD PEER REVIEW COMMENTS
5	10-23-2020	PER PLANNING BOARD PEER REVIEW COMMENTS
4	10-02-2020	PER PLANNING BOARD PEER REVIEW COMMENTS
3	07-31-2020	PER PLANNING BOARD PEER REVIEW COMMENTS
2	07-09-2020	PER NOI PEER REVIEW COMMENTS
1	05-18-2020	PER NOI PEER REVIEW COMMENTS

APPLICANT\OWNER:
STEEN
REALTY AND DEVELOPMENT CORPORATION
3 LEDGEWOOD BOULEVARD DARTMOUTH, MA 02747

PROJECT:
ROCHESTER CROSSROADS
SMART GROWTH DEVELOPMENT
CRANBERRY HIGHWAY
ROCHESTER, MA

PROJECT NO.	2518-01	DATE:	10-25-2019
SCALE:	NONE	DWG. NAME:	C2518-01_
DESIGNED BY:	PGM/CMcC	CHECKED BY:	PC

PREPARED BY:
ALLEN & MAJOR ASSOCIATES, INC.
civil engineering ◆ land surveying
environmental consulting ◆ landscape architecture
www.allenmajor.com
10 MAIN STREET
LAKEVILLE MA 02347
TEL: (508) 523-1010
FAX: (508) 523-6309
WOBURN, MA ◆ LAKEVILLE, MA ◆ MANCHESTER, NH

THIS DRAWING HAS BEEN PREPARED IN DIGITAL FORMAT. CLIENT/CLIENT'S REPRESENTATIVE OR CONSULTANTS MAY BE PROVIDED COPIES OF DRAWINGS AND SPECIFICATIONS FOR HIS/HER INFORMATION AND/OR SPECIFIC USE ON THIS PROJECT. DUE TO THE POTENTIAL THAT THE PROVIDED INFORMATION MAY BE MODIFIED UNINTENTIONALLY OR OTHERWISE, ALLEN & MAJOR ASSOCIATES, INC. MAY REMOVE ALL INDICATION OF THE DOCUMENT'S AUTHORSHIP ON THE DIGITAL MEDIA. PRINTED REPRESENTATIONS OR PORTABLE DOCUMENT FORMAT OF THE DRAWINGS AND SPECIFICATIONS ISSUED SHALL BE THE ONLY RECORD COPIES OF ALLEN & MAJOR ASSOCIATES, INC.'S WORK PRODUCT.

DRAWING TITLE: ABBREVIATIONS & NOTES

SHEET No. C-005

Copyright©2020 Allen & Major Associates, Inc.
All Rights Reserved

TEST PIT # 1

DATE EXCAVATED: MAY 29, 2019
LOGGED BY: PAUL MATOS, P.E.
WITNESSED BY: STEVE HALLEM
DEPARTMENT: MASSDEP
PERCOLATION RATE: 7 MIN/INCH

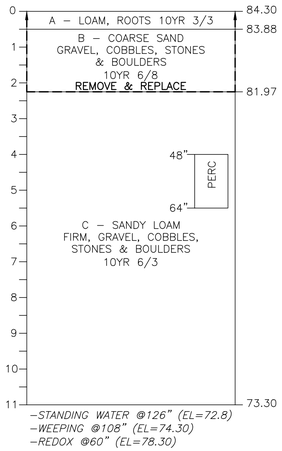

–STANDING WATER @126" (EL=72.8)
–WEEPING @108" (EL=74.30)
–REDOX @60" (EL=78.30)

TEST PIT # 2

DATE EXCAVATED: MAY 29, 2019
LOGGED BY: PAUL MATOS, P.E.
WITNESSED BY: STEVE HALLEM
DEPARTMENT: MASSDEP
PERCOLATION RATE: 6 MIN/INCH

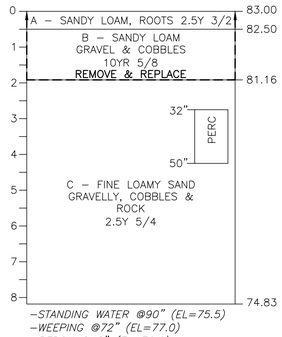

–STANDING WATER @90" (EL=75.5)
–WEEPING @72" (EL=77.0)
–REDOX @48" (EL=79.0)

TEST PIT # 3

DATE EXCAVATED: MAY 29, 2019
LOGGED BY: PAUL MATOS, P.E.
WITNESSED BY: STEVE HALLEM
DEPARTMENT: MASSDEP
PERCOLATION RATE: 6 MIN/INCH

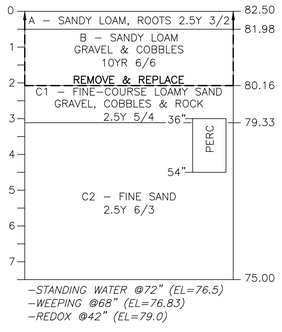

–STANDING WATER @72" (EL=76.5)
–WEEPING @68" (EL=76.83)
–REDOX @42" (EL=79.0)

TEST PIT # 4

DATE EXCAVATED: MAY 29, 2019
LOGGED BY: PAUL MATOS, P.E.
WITNESSED BY: STEVE HALLEM
DEPARTMENT: MASSDEP
PERCOLATION RATE: 4 MIN/INCH

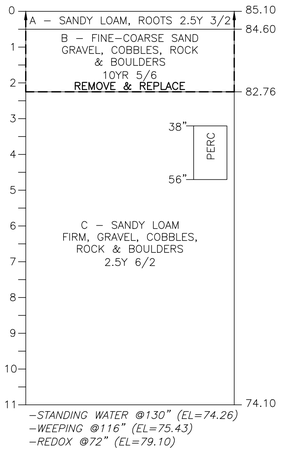

–STANDING WATER @130" (EL=74.26)
–WEEPING @116" (EL=75.43)
–REDOX @72" (EL=79.10)

TEST PIT # 5

DATE EXCAVATED: MAY 29, 2019
LOGGED BY: PAUL MATOS, P.E.
WITNESSED BY: STEVE HALLEM
DEPARTMENT: MASSDEP
PERCOLATION RATE: –

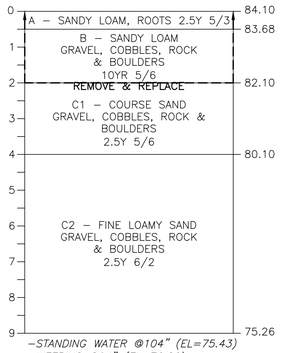

–STANDING WATER @104" (EL=75.43)
–WEEPING @94" (EL=76.26)
–REDOX @64" (EL=78.76)

TEST PIT # 6

DATE EXCAVATED: MAY 29, 2019
LOGGED BY: PAUL MATOS, P.E.
WITNESSED BY: STEVE HALLEM
DEPARTMENT: MASSDEP
PERCOLATION RATE: 5 MIN/INCH

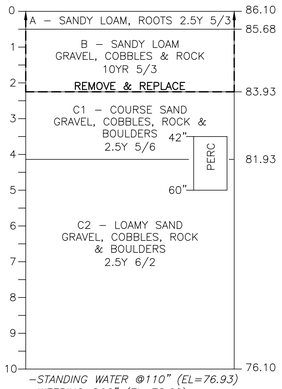

–STANDING WATER @110" (EL=76.93)
–WEEPING @90" (EL=78.60)
–REDOX @60" (EL=81.10)

TEST PIT # A

DATE EXCAVATED: MAY 30, 2019
LOGGED BY: PAUL MATOS, P.E.

–STANDING WATER @66" (EL=73.8)
–WEEPING @48" (EL=75.3)
–REDOX @40" (EL=75.96)

TEST PIT # C

DATE EXCAVATED: MAY 30, 2019
LOGGED BY: PAUL MATOS, P.E.

–STANDING WATER @90" (EL=72.0)
–WEEPING @62" (EL=74.3)
–REDOX @42" (EL=76.0)

TEST PIT # D

DATE EXCAVATED: FEBRUARY 3, 2020
LOGGED BY: PAUL MATOS, P.E., P.L.S

–STANDING WATER @48" (EL=74.5)
–WEEPING @36" (EL=75.5)
–REDOX – NONE

TEST PIT # E

DATE EXCAVATED: FEBRUARY 3, 2020
LOGGED BY: PAUL MATOS, P.E., P.L.S

–STANDING WATER @42" (EL=75.0)
–WEEPING @40" (EL=75.16)
–REDOX @36" (EL=75.5)

TEST PIT # F

DATE EXCAVATED: FEBRUARY 3, 2020
LOGGED BY: PAUL MATOS, P.E., P.L.S

–STANDING WATER @76" (EL=75.67)
–WEEPING @72" (EL=76.0)
–REDOX – NONE

TEST PIT # G

DATE EXCAVATED: FEBRUARY 3, 2020
LOGGED BY: PAUL MATOS, P.E., P.L.S

–STANDING WATER @90" (EL=75.7)
–WEEPING @88" (EL=75.86)
–REDOX – NONE

TEST PIT # H

DATE EXCAVATED: FEBRUARY 3, 2020
LOGGED BY: PAUL MATOS, P.E., P.L.S

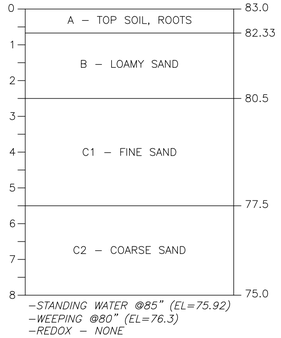

–STANDING WATER @85" (EL=75.92)
–WEEPING @80" (EL=76.3)
–REDOX – NONE

TEST PIT # I

DATE EXCAVATED: FEBRUARY 3, 2020
LOGGED BY: PAUL MATOS, P.E., P.L.S

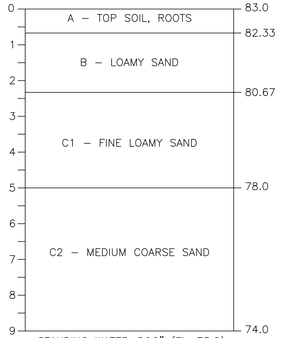

–STANDING WATER @96" (EL=75.0)
–WEEPING @92" (EL=75.33)
–REDOX – NONE

TEST PIT # J

DATE EXCAVATED: FEBRUARY 3, 2020
LOGGED BY: PAUL MATOS, P.E., P.L.S

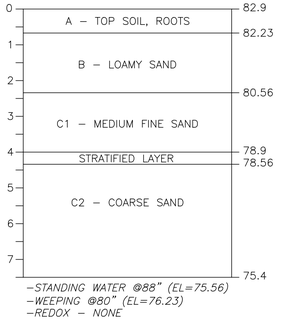

–STANDING WATER @88" (EL=75.56)
–WEEPING @80" (EL=76.23)
–REDOX – NONE

TEST PIT # K

DATE EXCAVATED: FEBRUARY 3, 2020
LOGGED BY: PAUL MATOS, P.E., P.L.S

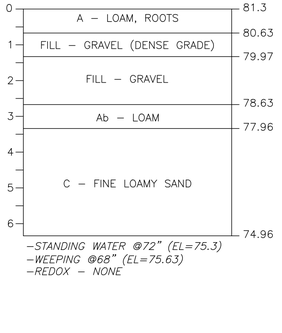

–STANDING WATER @72" (EL=75.3)
–WEEPING @68" (EL=75.63)
–REDOX – NONE

TEST PIT # L

DATE EXCAVATED: FEBRUARY 3, 2020
LOGGED BY: PAUL MATOS, P.E., P.L.S

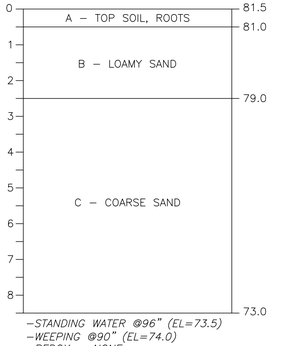

–STANDING WATER @96" (EL=73.5)
–WEEPING @90" (EL=74.0)
–REDOX – NONE

TEST PIT # M

DATE EXCAVATED: FEBRUARY 3, 2020
LOGGED BY: PAUL MATOS, P.E., P.L.S

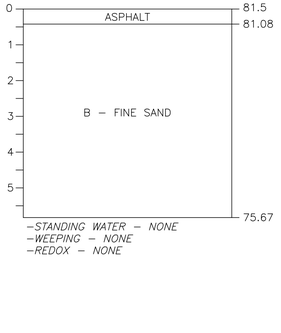

–STANDING WATER – NONE
–WEEPING – NONE
–REDOX – NONE

M:\PROJECTS\2518-01\CIVIL\DRAWINGS\CURRENT\C-2518-01_SEPTIC CROSS SECTION.DWG

APPROVED BY
TOWN OF ROCHESTER PLANNING BOARD

DATE SUBMITTED: _____

DATE ENDORSED: _____

DATE APPROVED: _____

_____

_____

_____

_____

_____

_____

TOWN OF ROCHESTER PLANNING BOARD

ISSUED FOR REVIEW
10-25-2019 REV. 6:12-01-2020

COMMONWEALTH OF MASSACHUSETTS
PHILIP L CORDEIRO
CIVIL
NO. 47083
REGISTERED
PROFESSIONAL ENGINEER

Philip L Cordeiro
c=US, o=Allen and Major Associates Inc., ou=A01410C0000001757988B4F D00002012, cn=Philip L Cordeiro
2021.01.26 14:21:08 -05'00'

PROFESSIONAL ENGINEER FOR
ALLEN & MAJOR ASSOCIATES, INC.

REV	DATE	DESCRIPTION
6	12-01-2020	PER PLANNING BOARD PEER REVIEW COMMENTS
5	10-23-2020	PER PLANNING BOARD PEER REVIEW COMMENTS
4	10-02-2020	PER PLANNING BOARD PEER REVIEW COMMENTS
3	07-31-2020	PER PLANNING BOARD PEER REVIEW COMMENTS
2	07-09-2020	PER NOI PEER REVIEW COMMENTS
1	05-18-2020	PER NOI PEER REVIEW COMMENTS

APPLICANT\OWNER:

STEEN
REALTY AND DEVELOPMENT CORPORATION
3 LEDGEWOOD BOULEVARD DARTMOUTH, MA 02747

PROJECT:

ROCHESTER CROSSROADS
SMART GROWTH DEVELOPMENT
CRANBERRY HIGHWAY
ROCHESTER, MA

PROJECT NO.	2518-01	DATE:	10-25-2019
SCALE:	NONE	DWG. NAME:	C2518-01_
DESIGNED BY:	PGM/CMcC	CHECKED BY:	PC

PREPARED BY:

ALLEN & MAJOR ASSOCIATES, INC.
civil engineering ◆ land surveying
environmental consulting ◆ landscape architecture
www.allenmajor.com
10 MAIN STREET
LAKEVILLE MA 02347
TEL: (508) 923-1010
FAX: (508) 923-6309
WOBURN, MA ◆ LAKEVILLE, MA ◆ MANCHESTER, NH

THIS DRAWING HAS BEEN PREPARED IN DIGITAL FORMAT. CLIENT/CLIENT'S REPRESENTATIVE OR CONSULTANTS MAY BE PROVIDED COPIES OF DRAWINGS AND SPECIFICATIONS FOR HIS/HER INFORMATION AND/OR SPECIFIC USE ON THIS PROJECT. DUE TO THE POTENTIAL THAT THE PROVIDED INFORMATION MAY BE MODIFIED UNINTENTIONALLY OR OTHERWISE, ALLEN & MAJOR ASSOCIATES, INC. MAY REMOVE ALL INDICATION OF THE DOCUMENT'S AUTHORSHIP ON THE DIGITAL MEDIA. PRINTED REPRESENTATIONS OR PORTABLE DOCUMENT FORMAT OF THE DRAWINGS AND SPECIFICATIONS ISSUED SHALL BE THE ONLY RECORD COPIES OF ALLEN & MAJOR ASSOCIATES, INC.'S WORK PRODUCT.

DRAWING TITLE:

TEST PIT LOGS

SHEET No.

C-006

Copyright©2020 Allen & Major Associates, Inc.
All Rights Reserved

TEST PIT # N

DATE EXCAVATED: FEBRUARY 18, 2020
LOGGED BY: PAUL MATOS, P.E., P.L.S

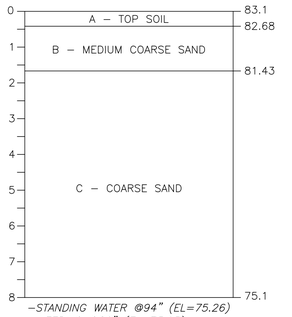

–STANDING WATER @94" (EL=75.26)
–WEEPING @86" (EL=75.93)
–REDOX – NONE

TEST PIT # O

DATE EXCAVATED: FEBRUARY 18, 2020
LOGGED BY: PAUL MATOS, P.E., P.L.S

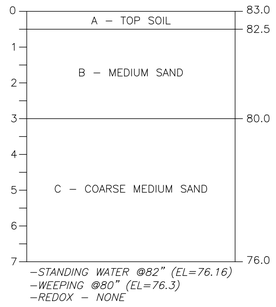

–STANDING WATER @82" (EL=76.16)
–WEEPING @80" (EL=76.3)
–REDOX – NONE

TEST PIT # P

DATE EXCAVATED: FEBRUARY 18, 2020
LOGGED BY: PAUL MATOS, P.E., P.L.S

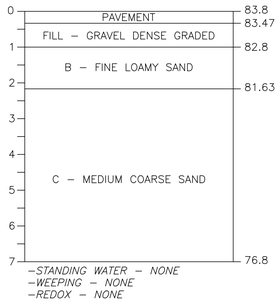

–STANDING WATER – NONE
–WEEPING – NONE
–REDOX – NONE

TEST PIT # Q

DATE EXCAVATED: FEBRUARY 18, 2020
LOGGED BY: PAUL MATOS, P.E., P.L.S

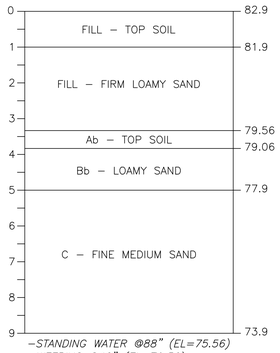

–STANDING WATER @88" (EL=75.56)
–WEEPING @40" (EL=79.56)
–REDOX @48" (EL=78.9)

TEST PIT # R

DATE EXCAVATED: FEBRUARY 18, 2020
LOGGED BY: PAUL MATOS, P.E., P.L.S

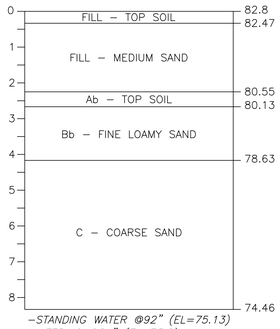

–STANDING WATER @92" (EL=75.13)
–WEEPING @84" (EL=75.8)
–REDOX – NONE

TEST PIT # S

DATE EXCAVATED: FEBRUARY 18, 2020
LOGGED BY: PAUL MATOS, P.E., P.L.S

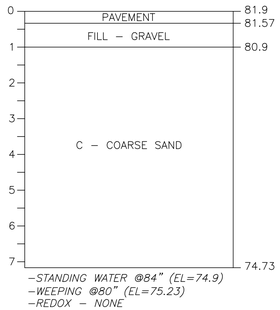

–STANDING WATER @84" (EL=74.9)
–WEEPING @80" (EL=75.23)
–REDOX – NONE

M:\PROJECTS\2518-01\CIVIL\DRAWINGS\CURRENT\C-2518-01_SEPTIC_CROSS_SECTION.DWG

APPROVED BY
TOWN OF ROCHESTER PLANNING BOARD

DATE SUBMITTED: _____

DATE ENDORSED: _____

DATE APPROVED: _____

_____

_____

_____

_____

_____

_____

TOWN OF ROCHESTER PLANNING BOARD

ISSUED FOR REVIEW
10-25-2019 REV. 6:12-01-2020

COMMONWEALTH OF MASSACHUSETTS
PHILIP L CORDEIRO
CIVIL
NO. 47083
REGISTERED PROFESSIONAL ENGINEER

Philip L Cordeiro
c=US, o=Allen and Major Associates Inc., ou=A01410C0000175788B4FD00002012, cn=Philip L Cordeiro
2021.01.26 14:21:34 -05'00'

PROFESSIONAL ENGINEER FOR
ALLEN & MAJOR ASSOCIATES, INC.

REV	DATE	DESCRIPTION
6	12-01-2020	PER PLANNING BOARD PEER REVIEW COMMENTS
5	10-23-2020	PER PLANNING BOARD PEER REVIEW COMMENTS
4	10-02-2020	PER PLANNING BOARD PEER REVIEW COMMENTS
3	07-31-2020	PER PLANNING BOARD PEER REVIEW COMMENTS
2	07-09-2020	PER NOI PEER REVIEW COMMENTS
1	05-18-2020	PER NOI PEER REVIEW COMMENTS

APPLICANT\OWNER:

STEEN
REALTY AND DEVELOPMENT CORPORATION
3 LEDGEWOOD BOULEVARD DARTMOUTH, MA 02747

PROJECT:

ROCHESTER CROSSROADS
SMART GROWTH DEVELOPMENT
CRANBERRY HIGHWAY
ROCHESTER, MA

PROJECT NO.	2518-01	DATE:	10-25-2019
SCALE:	NONE	DWG. NAME:	C2518-01_
DESIGNED BY:	PGM/CMcC	CHECKED BY:	PC

PREPARED BY:

ALLEN & MAJOR ASSOCIATES, INC.
civil engineering ◆ land surveying
environmental consulting ◆ landscape architecture
www.allenmajor.com
10 MAIN STREET
LAKEVILLE MA 02347
TEL: (508) 923-1010
FAX: (508) 923-6309
WOBURN, MA ◆ LAKEVILLE, MA ◆ MANCHESTER, NH

THIS DRAWING HAS BEEN PREPARED IN DIGITAL FORMAT. CLIENT/CLIENT'S REPRESENTATIVE OR CONSULTANTS MAY BE PROVIDED COPIES OF DRAWINGS AND SPECIFICATIONS FOR HIS/HER INFORMATION AND/OR SPECIFIC USE ON THIS PROJECT. DUE TO THE POTENTIAL THAT THE PROVIDED INFORMATION MAY BE MODIFIED UNINTENTIONALLY OR OTHERWISE, ALLEN & MAJOR ASSOCIATES, INC. MAY REMOVE ALL INDICATION OF THE DOCUMENT'S AUTHORSHIP ON THE DIGITAL MEDIA. PRINTED REPRESENTATIONS OR PORTABLE DOCUMENT FORMAT OF THE DRAWINGS AND SPECIFICATIONS ISSUED SHALL BE THE ONLY RECORD COPIES OF ALLEN & MAJOR ASSOCIATES, INC.'S WORK PRODUCT.

DRAWING TITLE:

TEST PIT LOGS

SHEET No.

C-007

Copyright©2020 Allen & Major Associates, Inc.
All Rights Reserved

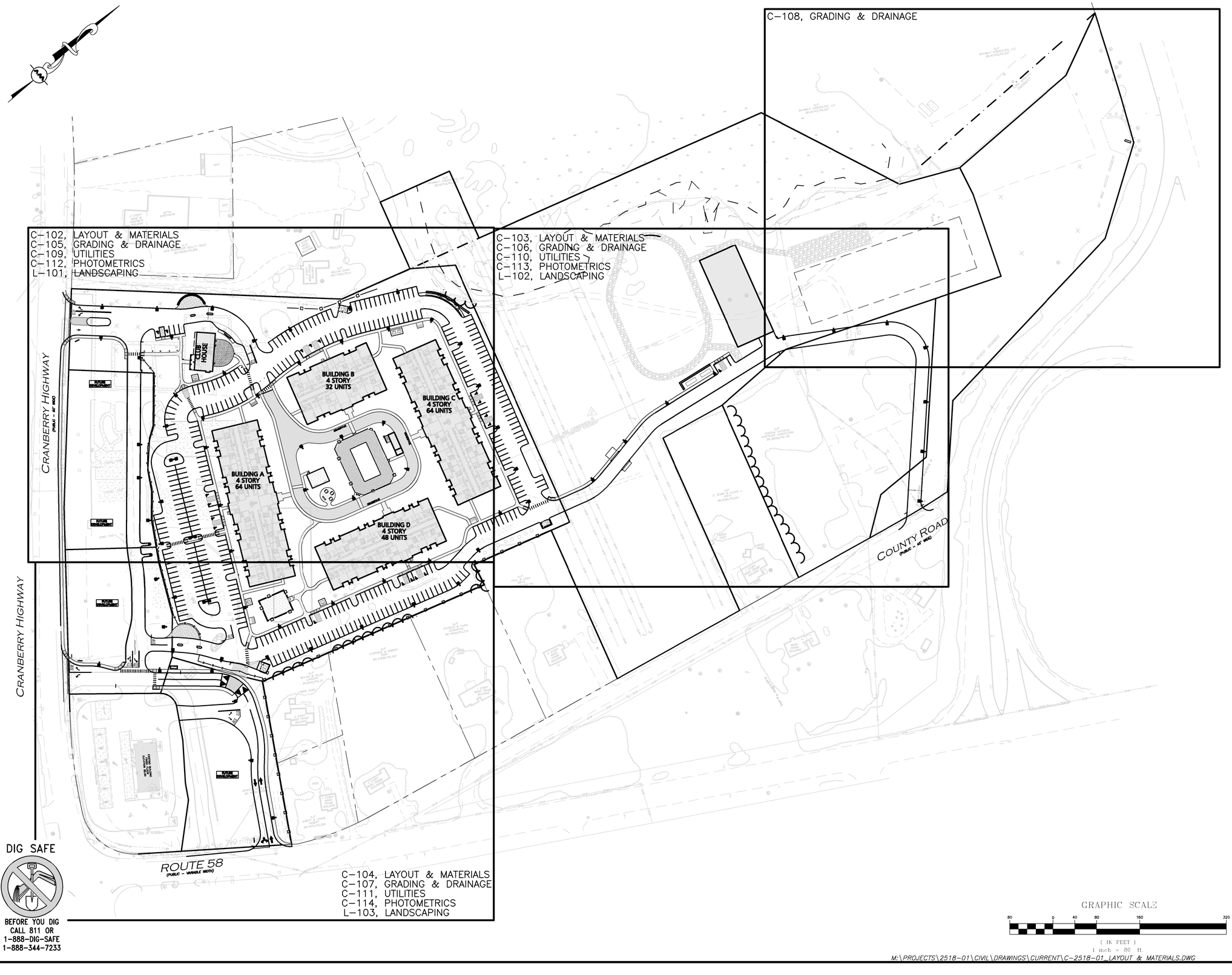

DIG SAFE

BEFORE YOU DIG
CALL 811 OR
1-888-DIG-SAFE
1-888-344-7233

GRAPHIC SCALE

80 0 40 80 160 320

(IN FEET)
1 inch = 80 ft.

M:\PROJECTS\2518-01\CIVIL\DRAWINGS\CURRENT\C-2518-01_LAYOUT & MATERIALS.DWG

APPROVED BY
TOWN OF ROCHESTER PLANNING BOARD

DATE SUBMITTED: _____

DATE ENDORSED: _____

DATE APPROVED: _____

_____

_____

_____

_____

_____

_____

_____

TOWN OF ROCHESTER PLANNING BOARD

ISSUED FOR REVIEW
10-25-2019 REV. 6:12-01-2020

COMMONWEALTH OF MASSACHUSETTS
PHILIP L CORDEIRO
CIVIL
NO. 47083
REGISTERED PROFESSIONAL ENGINEER

Philip L Cordeiro
c=US, o=Allen and Major Associates Inc., ou=A01410C000001759B8B4FD00002012, cn=Philip L Cordeiro
2021.01.26 14:21:58 -05'00'

PROFESSIONAL ENGINEER FOR
ALLEN & MAJOR ASSOCIATES, INC.

REV	DATE	DESCRIPTION
6	12-01-2020	PER PLANNING BOARD PEER REVIEW COMMENTS
5	10-23-2020	PER PLANNING BOARD PEER REVIEW COMMENTS
4	10-02-2020	PER PLANNING BOARD PEER REVIEW COMMENTS
3	07-31-2020	PER PLANNING BOARD PEER REVIEW COMMENTS
2	07-09-2020	PER NOI PEER REVIEW COMMENTS
1	05-18-2020	PER NOI PEER REVIEW COMMENTS

APPLICANT\OWNER:

STEEN
REALTY AND DEVELOPMENT CORPORATION
3 LEDGEWOOD BOULEVARD DARTMOUTH, MA 02747

PROJECT:

ROCHESTER CROSSROADS
SMART GROWTH DEVELOPMENT
CRANBERRY HIGHWAY
ROCHESTER, MA

PROJECT NO.	2518-01	DATE:	10-25-2019
SCALE:	1" = 80'	DWG. NAME:	C2518-01_
DESIGNED BY:	PGM/CMcC	CHECKED BY:	PC

PREPARED BY:

ALLEN & MAJOR ASSOCIATES, INC.
civil engineering ◆ land surveying
environmental consulting ◆ landscape architecture
www.allenmajor.com
10 MAIN STREET
LAKEVILLE MA 02347
TEL: (508) 523-1010
FAX: (508) 523-6309

WOBURN, MA ◆ LAKEVILLE, MA ◆ MANCHESTER, NH

THIS DRAWING HAS BEEN PREPARED IN DIGITAL FORMAT. CLIENT/CLIENT'S REPRESENTATIVE OR CONSULTANTS MAY BE PROVIDED COPIES OF DRAWINGS AND SPECIFICATIONS FOR HIS/HER INFORMATION AND/OR SPECIFIC USE ON THIS PROJECT. DUE TO THE POTENTIAL THAT THE PROVIDED INFORMATION MAY BE MODIFIED UNINTENTIONALLY OR OTHERWISE, ALLEN & MAJOR ASSOCIATES, INC. MAY REMOVE ALL INDICATION OF THE DOCUMENT'S AUTHORSHIP ON THE DIGITAL MEDIA. PRINTED REPRESENTATIONS OR PORTABLE DOCUMENT FORMAT OF THE DRAWINGS AND SPECIFICATIONS ISSUED SHALL BE THE ONLY RECORD COPIES OF ALLEN & MAJOR ASSOCIATES, INC.'S WORK PRODUCT.

DRAWING TITLE:

OVERVIEW PLAN

SHEET No.

C-100

Copyright©2020 Allen & Major Associates, Inc.
All Rights Reserved

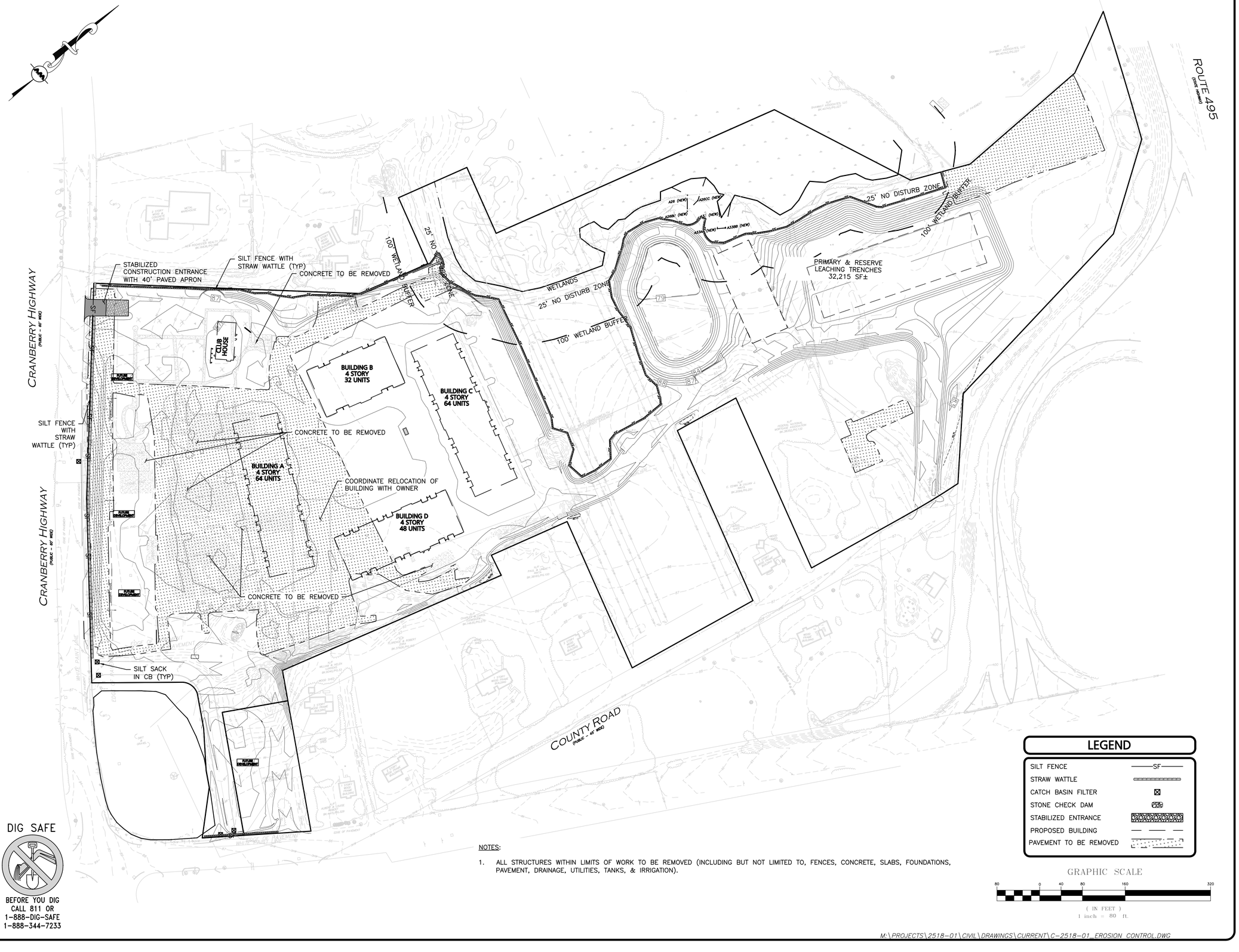

DIG SAFE

BEFORE YOU DIG
CALL 811 OR
1-888-DIG-SAFE
1-888-344-7233

NOTES:

1. ALL STRUCTURES WITHIN LIMITS OF WORK TO BE REMOVED (INCLUDING BUT NOT LIMITED TO, FENCES, CONCRETE, SLABS, FOUNDATIONS, PAVEMENT, DRAINAGE, UTILITIES, TANKS, & IRRIGATION).

LEGEND

SILT FENCE	SF
STRAW WATTLE	
CATCH BASIN FILTER	
STONE CHECK DAM	
STABILIZED ENTRANCE	
PROPOSED BUILDING	
PAVEMENT TO BE REMOVED	

GRAPHIC SCALE

80 0 40 80 160 320

(IN FEET)
1 inch = 80 ft.

M:\PROJECTS\2518-01\CIVIL\DRAWINGS\CURRENT\C-2518-01_EROSION CONTROL.DWG

APPROVED BY
TOWN OF ROCHESTER PLANNING BOARD

DATE SUBMITTED: _____

DATE ENDORSED: _____

DATE APPROVED: _____

_____

_____

_____

_____

_____

_____

TOWN OF ROCHESTER PLANNING BOARD

ISSUED FOR REVIEW
10-25-2019 REV. 6:12-01-2020

COMMONWEALTH OF MASSACHUSETTS
PHILIP L CORDEIRO
CIVIL
NO. 47083
REGISTERED PROFESSIONAL ENGINEER

Philip L Cordeiro
c=US, o=Allen and Major Associates Inc., ou=A01410C000001759BB4FD00002012, cn=Philip L Cordeiro
2021.01.26 14:22:24 -05'00'

PROFESSIONAL ENGINEER FOR
ALLEN & MAJOR ASSOCIATES, INC.

REV	DATE	DESCRIPTION
6	12-01-2020	PER PLANNING BOARD PEER REVIEW COMMENTS
5	10-23-2020	PER PLANNING BOARD PEER REVIEW COMMENTS
4	10-02-2020	PER PLANNING BOARD PEER REVIEW COMMENTS
3	07-31-2020	PER PLANNING BOARD PEER REVIEW COMMENTS
2	07-09-2020	PER NOI PEER REVIEW COMMENTS
1	05-18-2020	PER NOI PEER REVIEW COMMENTS

APPLICANT\OWNER:

STEEN
REALTY AND DEVELOPMENT CORPORATION
3 LEDGEWOOD BOULEVARD DARTMOUTH, MA 02747

PROJECT:

ROCHESTER CROSSROADS
SMART GROWTH DEVELOPMENT
CRANBERRY HIGHWAY
ROCHESTER, MA

PROJECT NO.	2518-01	DATE:	10-25-2019
SCALE:	1" = 80'	DWG. NAME:	C2518-01_
DESIGNED BY:	PGM/CMcC	CHECKED BY:	PC

PREPARED BY:

ALLEN & MAJOR ASSOCIATES, INC.
civil engineering ◆ land surveying
environmental consulting ◆ landscape architecture
www.allenmajor.com
10 MAIN STREET
LAKEVILLE MA 02347
TEL: (508) 923-1010
FAX: (508) 923-6309
WOBURN, MA ◆ LAKEVILLE, MA ◆ MANCHESTER, NH

THIS DRAWING HAS BEEN PREPARED IN DIGITAL FORMAT. CLIENT/CLIENT'S REPRESENTATIVE OR CONSULTANTS MAY BE PROVIDED COPIES OF DRAWINGS AND SPECIFICATIONS FOR HIS/HER INFORMATION AND/OR SPECIFIC USE ON THIS PROJECT. DUE TO THE POTENTIAL THAT THE PROVIDED INFORMATION MAY BE MODIFIED UNINTENTIONALLY OR OTHERWISE, ALLEN & MAJOR ASSOCIATES, INC. MAY REMOVE ALL INDICATION OF THE DOCUMENT'S AUTHORSHIP ON THE DIGITAL MEDIA. PRINTED REPRESENTATIONS OR PORTABLE DOCUMENT FORMAT OF THE DRAWINGS AND SPECIFICATIONS ISSUED SHALL BE THE ONLY RECORD COPIES OF ALLEN & MAJOR ASSOCIATES, INC.'S WORK PRODUCT.

DRAWING TITLE:

SITE PREPARATION & EROSION CONTROL PLAN

SHEET No.

C-101

Copyright©2020 Allen & Major Associates, Inc.
All Rights Reserved

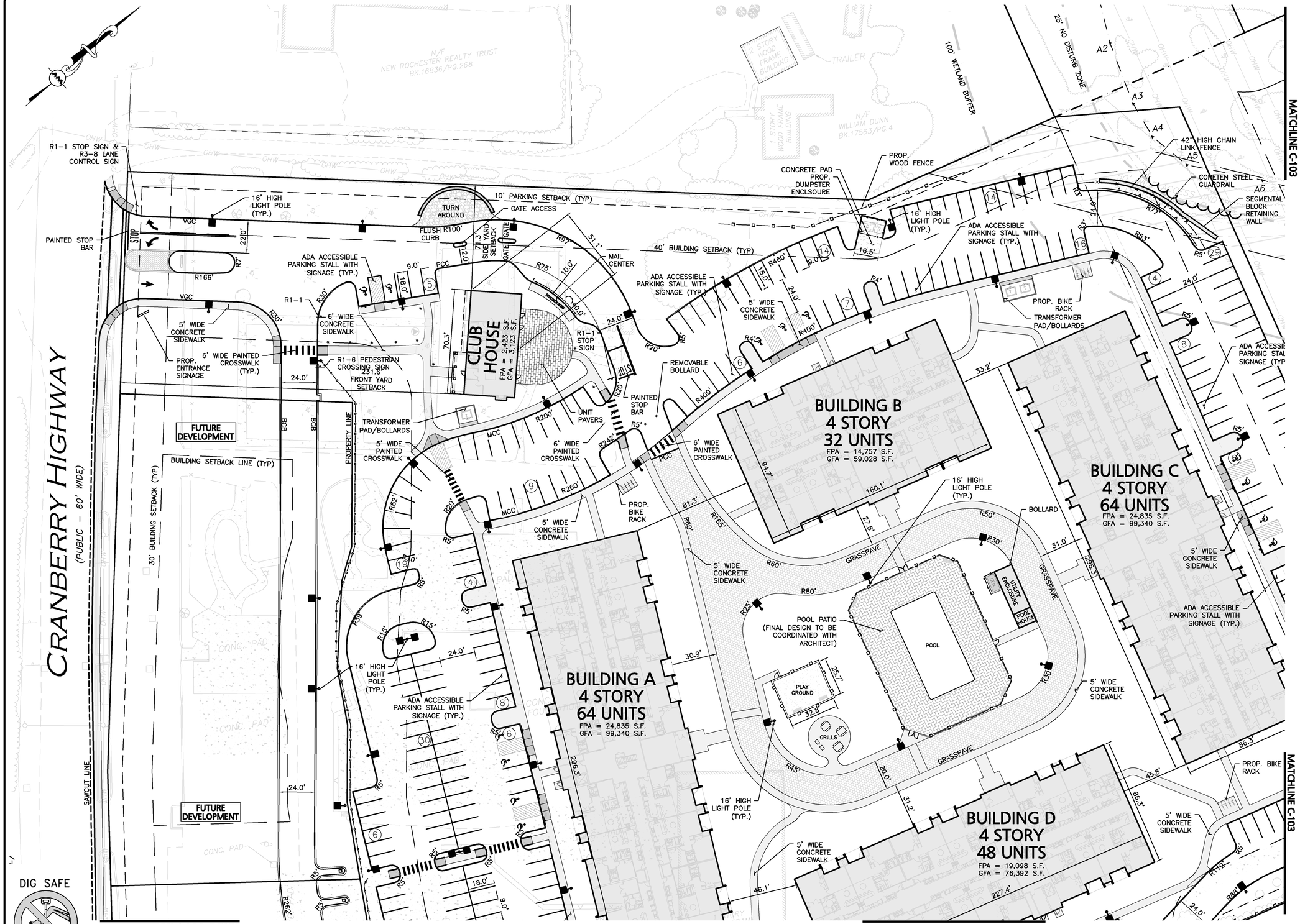

DIG SAFE

BEFORE YOU DIG CALL 811 OR 1-888-DIG-SAFE 1-888-344-7233

NOTES:

1) SEE SHEET C-104 FOR LEGEND.

GRAPHIC SCALE

30 0 15 30 60 120

(IN FEET)
1 inch = 30 ft.

M:\PROJECTS\2518-01\CIVIL\DRAWINGS\CURRENT\C-2518-01_LAYOUT & MATERIALS.DWG

APPROVED BY
TOWN OF ROCHESTER PLANNING BOARD

DATE SUBMITTED: _____

DATE ENDORSED: _____

DATE APPROVED: _____

_____

_____

_____

_____

_____

_____

TOWN OF ROCHESTER PLANNING BOARD

ISSUED FOR REVIEW
10-25-2019 REV. 6:12-01-2020

COMMONWEALTH OF MASSACHUSETTS
PHILIP L. CORDEIRO
CIVIL
NO. 47083
REGISTERED PROFESSIONAL ENGINEER

Philip L Cordeiro
c=US, o=Allen and Major Associates Inc., ou=A01410C0000017598BB4FD00002012, cn=Philip L Cordeiro
2021.01.26 14:22:49 -05'00'

PROFESSIONAL ENGINEER FOR
ALLEN & MAJOR ASSOCIATES, INC.

REV	DATE	DESCRIPTION
6	12-01-2020	PER PLANNING BOARD PEER REVIEW COMMENTS
5	10-23-2020	PER PLANNING BOARD PEER REVIEW COMMENTS
4	10-02-2020	PER PLANNING BOARD PEER REVIEW COMMENTS
3	07-31-2020	PER PLANNING BOARD PEER REVIEW COMMENTS
2	07-09-2020	PER NOI PEER REVIEW COMMENTS
1	05-18-2020	PER NOI PEER REVIEW COMMENTS

APPLICANT\OWNER:

STEEN
REALTY AND DEVELOPMENT CORPORATION
3 LEDGEWOOD BOULEVARD DARTMOUTH, MA 02747

PROJECT:

ROCHESTER CROSSROADS
SMART GROWTH DEVELOPMENT
CRANBERRY HIGHWAY
ROCHESTER, MA

PROJECT NO.	2518-01	DATE:	10-25-2019
SCALE:	1" = 30'	DWG. NAME:	C2518-01_
DESIGNED BY:	PGM/CMcC	CHECKED BY:	PC

PREPARED BY:

ALLEN & MAJOR ASSOCIATES, INC.
civil engineering ◆ land surveying
environmental consulting ◆ landscape architecture
www.allenmajor.com
10 MAIN STREET
LAKEVILLE MA 02347
TEL: (508) 523-1010
FAX: (508) 523-6309

WOBURN, MA ◆ LAKEVILLE, MA ◆ MANCHESTER, NH

THIS DRAWING HAS BEEN PREPARED IN DIGITAL FORMAT. CLIENT/CLIENT'S REPRESENTATIVE OR CONSULTANTS MAY BE PROVIDED COPIES OF DRAWINGS AND SPECIFICATIONS FOR HIS/HER INFORMATION AND/OR SPECIFIC USE ON THIS PROJECT. DUE TO THE POTENTIAL THAT THE PROVIDED INFORMATION MAY BE MODIFIED UNINTENTIONALLY OR OTHERWISE, ALLEN & MAJOR ASSOCIATES, INC. MAY REMOVE ALL INDICATION OF THE DOCUMENT'S AUTHORSHIP ON THE DIGITAL MEDIA. PRINTED REPRESENTATIONS OR PORTABLE DOCUMENT FORMAT OF THE DRAWINGS AND SPECIFICATIONS ISSUED SHALL BE THE ONLY RECORD COPIES OF ALLEN & MAJOR ASSOCIATES, INC.'S WORK PRODUCT.

DRAWING TITLE:

LAYOUT & MATERIALS PLAN

SHEET No.

C-102

Copyright©2020 Allen & Major Associates, Inc.
All Rights Reserved

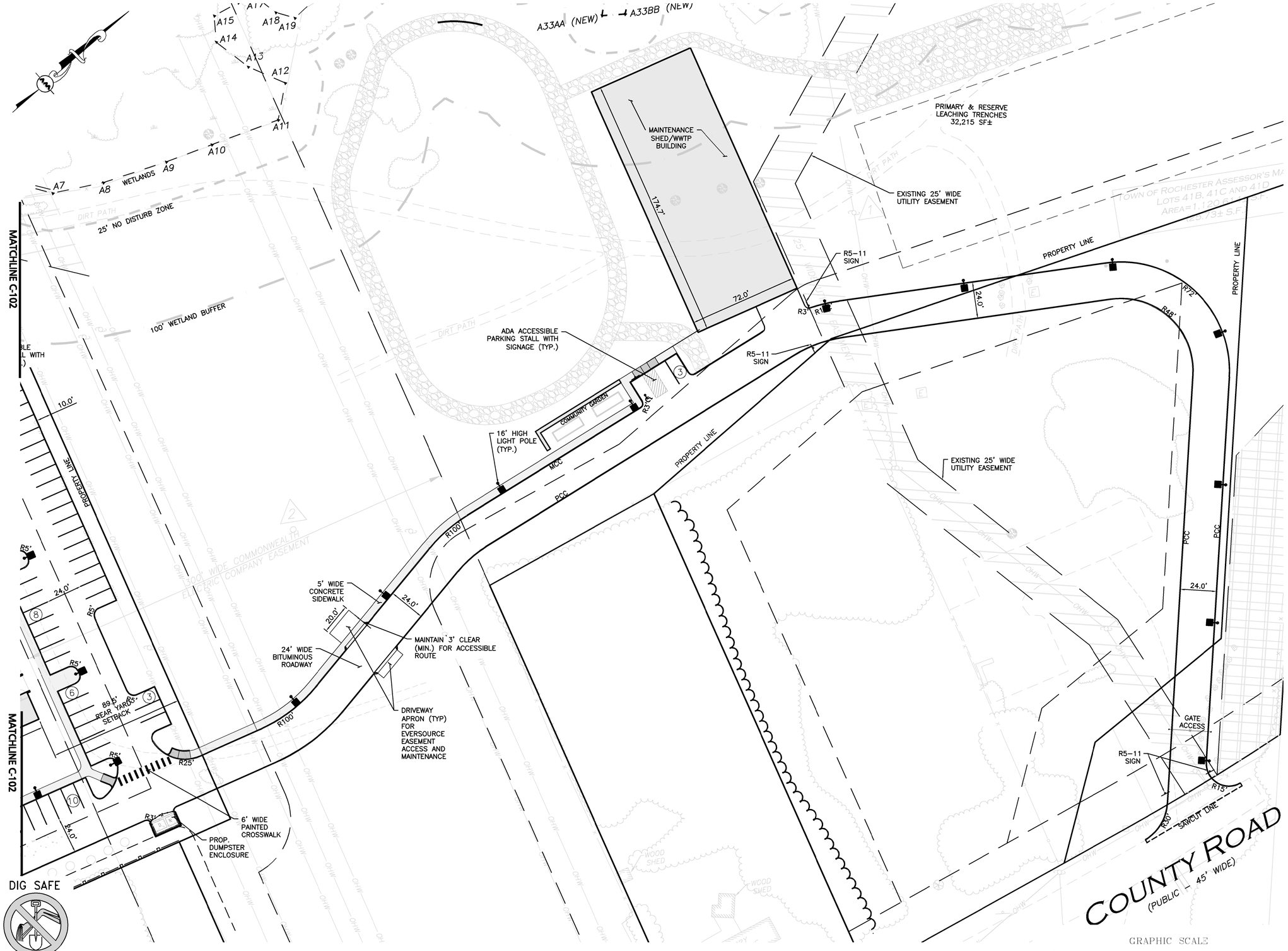

DIG SAFE

BEFORE YOU DIG
CALL 811 OR
1-888-DIG-SAFE
1-888-344-7233

NOTES:

1) SEE SHEET C-104 FOR LEGEND

GRAPHIC SCALE

30 0 15 30 60 120

(IN FEET)
1 inch = 30 ft.

M:\PROJECTS\2518-01\CIVIL\DRAWINGS\CURRENT\C-2518-01_LAYOUT & MATERIALS.DWG

APPROVED BY
TOWN OF ROCHESTER PLANNING BOARD

DATE SUBMITTED: _____

DATE ENDORSED: _____

DATE APPROVED: _____

_____

_____

_____

_____

_____

_____

_____

TOWN OF ROCHESTER PLANNING BOARD

ISSUED FOR REVIEW
10-25-2019 REV. 6:12-01-2020

COMMONWEALTH OF MASSACHUSETTS
PHILIP L CORDEIRO
CIVIL
NO. 47083
REGISTERED PROFESSIONAL ENGINEER

Philip L Cordeiro
c=US, o=Allen and Major Associates Inc., ou=A01410C0000017598B4FD00002012, cn=Philip L Cordeiro
2021.01.26 14:23:13 -05'00'

PROFESSIONAL ENGINEER FOR
ALLEN & MAJOR ASSOCIATES, INC.

REV	DATE	DESCRIPTION
6	12-01-2020	PER PLANNING BOARD PEER REVIEW COMMENTS
5	10-23-2020	PER PLANNING BOARD PEER REVIEW COMMENTS
4	10-02-2020	PER PLANNING BOARD PEER REVIEW COMMENTS
3	07-31-2020	PER PLANNING BOARD PEER REVIEW COMMENTS
2	07-09-2020	PER NOI PEER REVIEW COMMENTS
1	05-18-2020	PER NOI PEER REVIEW COMMENTS

APPLICANT\OWNER:

STEEN
REALTY AND DEVELOPMENT CORPORATION
3 LEDGEWOOD BOULEVARD DARTMOUTH, MA 02747

PROJECT:

ROCHESTER CROSSROADS
SMART GROWTH DEVELOPMENT
CRANBERRY HIGHWAY
ROCHESTER, MA

PROJECT NO.	2518-01	DATE:	10-25-2019
SCALE:	1" = 30'	DWG. NAME:	C2518-01_
DESIGNED BY:	PGM/CMcC	CHECKED BY:	PC

PREPARED BY:

ALLEN & MAJOR ASSOCIATES, INC.
civil engineering ◆ land surveying
environmental consulting ◆ landscape architecture
www.allenmajor.com
10 MAIN STREET
LAKEVILLE MA 02347
TEL: (508) 523-1010
FAX: (508) 523-6309

WOBURN, MA ◆ LAKEVILLE, MA ◆ MANCHESTER, NH

THIS DRAWING HAS BEEN PREPARED IN DIGITAL FORMAT. CLIENT/CLIENT'S REPRESENTATIVE OR CONSULTANTS MAY BE PROVIDED COPIES OF DRAWINGS AND SPECIFICATIONS FOR HIS/HER INFORMATION AND/OR SPECIFIC USE ON THIS PROJECT. DUE TO THE POTENTIAL THAT THE PROVIDED INFORMATION MAY BE MODIFIED UNINTENTIONALLY OR OTHERWISE, ALLEN & MAJOR ASSOCIATES, INC. MAY REMOVE ALL INDICATION OF THE DOCUMENT'S AUTHORSHIP ON THE DIGITAL MEDIA. PRINTED REPRESENTATIONS OR PORTABLE DOCUMENT FORMAT OF THE DRAWINGS AND SPECIFICATIONS ISSUED SHALL BE THE ONLY RECORD COPIES OF ALLEN & MAJOR ASSOCIATES, INC.'S WORK PRODUCT.

DRAWING TITLE:

LAYOUT & MATERIALS PLAN

SHEET No.

C-103

Copyright©2020 Allen & Major Associates, Inc.
All Rights Reserved

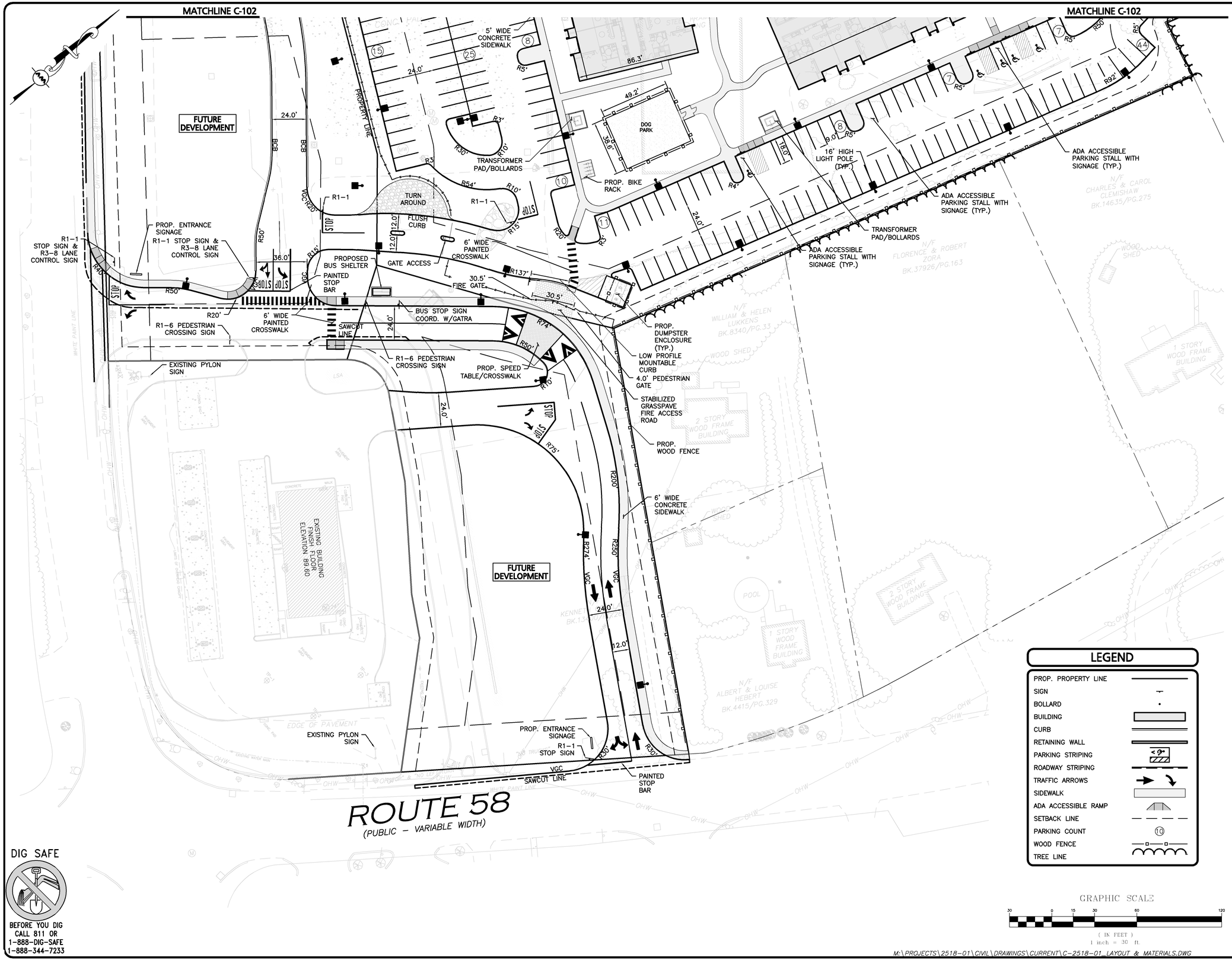

LEGEND

PROP. PROPERTY LINE	
SIGN	
BOLLARD	
BUILDING	
CURB	
RETAINING WALL	
PARKING STRIPING	
ROADWAY STRIPING	
TRAFFIC ARROWS	
SIDEWALK	
ADA ACCESSIBLE RAMP	
SETBACK LINE	
PARKING COUNT	(10)
WOOD FENCE	
TREE LINE	

GRAPHIC SCALE

30 0 15 30 60 120

(IN FEET)
1 inch = 30 ft.

M:\PROJECTS\2518-01\CIVIL\DRAWINGS\CURRENT\C-2518-01_LAYOUT & MATERIALS.DWG

DIG SAFE

BEFORE YOU DIG CALL 811 OR 1-888-DIG-SAFE 1-888-344-7233

APPROVED BY
TOWN OF ROCHESTER PLANNING BOARD

DATE SUBMITTED: _____

DATE ENDORSED: _____

DATE APPROVED: _____

_____

_____

_____

_____

_____

_____

TOWN OF ROCHESTER PLANNING BOARD

ISSUED FOR REVIEW
10-25-2019 REV. 6:12-01-2020

COMMONWEALTH OF MASSACHUSETTS
PHILIP L. CORDEIRO
CIVIL
NO. 47083
REGISTERED PROFESSIONAL ENGINEER

Philip L Cordeiro
c=US, o=Allen and Major Associates Inc., ou=A01410C0000017598B84FD00002012, cn=Philip L Cordeiro
2021.01.26 14:23:39 -05'00'

PROFESSIONAL ENGINEER FOR
ALLEN & MAJOR ASSOCIATES, INC.

REV	DATE	DESCRIPTION
6	12-01-2020	PER PLANNING BOARD PEER REVIEW COMMENTS
5	10-23-2020	PER PLANNING BOARD PEER REVIEW COMMENTS
4	10-02-2020	PER PLANNING BOARD PEER REVIEW COMMENTS
3	07-31-2020	PER PLANNING BOARD PEER REVIEW COMMENTS
2	07-09-2020	PER NOI PEER REVIEW COMMENTS
1	05-18-2020	PER NOI PEER REVIEW COMMENTS

APPLICANT\OWNER:

STEEN
REALTY AND DEVELOPMENT CORPORATION
3 LEDGEWOOD BOULEVARD DARTMOUTH, MA 02747

PROJECT:

ROCHESTER CROSSROADS
SMART GROWTH DEVELOPMENT
CRANBERRY HIGHWAY
ROCHESTER, MA

PROJECT NO.	2518-01	DATE:	10-25-2019
SCALE:	1" = 30'	DWG. NAME:	C2518-01_
DESIGNED BY:	PGM/CMcC	CHECKED BY:	PC

PREPARED BY:

ALLEN & MAJOR ASSOCIATES, INC.
civil engineering ◆ land surveying
environmental consulting ◆ landscape architecture
www.allenmajor.com
10 MAIN STREET
LAKEVILLE MA 02347
TEL: (508) 523-1010
FAX: (508) 523-6309
WOBURN, MA ◆ LAKEVILLE, MA ◆ MANCHESTER, NH

THIS DRAWING HAS BEEN PREPARED IN DIGITAL FORMAT. CLIENT/CLIENT'S REPRESENTATIVE OR CONSULTANTS MAY BE PROVIDED COPIES OF DRAWINGS AND SPECIFICATIONS FOR HIS/HER INFORMATION AND/OR SPECIFIC USE ON THIS PROJECT. DUE TO THE POTENTIAL THAT THE PROVIDED INFORMATION MAY BE MODIFIED UNINTENTIONALLY OR OTHERWISE, ALLEN & MAJOR ASSOCIATES, INC. MAY REMOVE ALL INDICATION OF THE DOCUMENT'S AUTHORSHIP ON THE DIGITAL MEDIA. PRINTED REPRESENTATIONS OR PORTABLE DOCUMENT FORMAT OF THE DRAWINGS AND SPECIFICATIONS ISSUED SHALL BE THE ONLY RECORD COPIES OF ALLEN & MAJOR ASSOCIATES, INC.'S WORK PRODUCT.

DRAWING TITLE:

LAYOUT & MATERIALS PLAN

SHEET No.

C-104

Copyright©2020 Allen & Major Associates, Inc.
All Rights Reserved

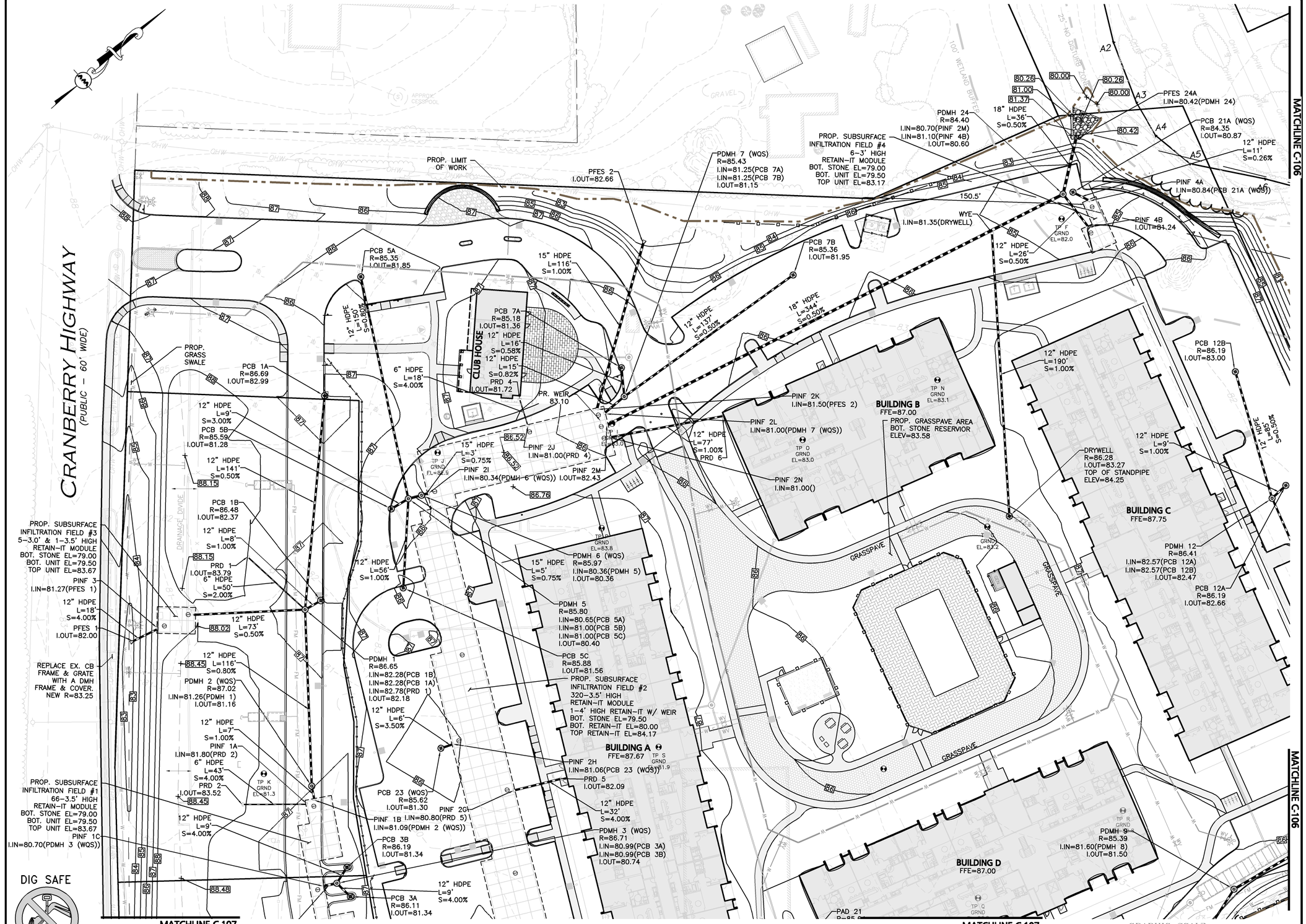

NOTES:

1) SEE SHEET C-107 FOR LEGEND.

DIG SAFE

BEFORE YOU DIG CALL 811 OR 1-888-DIG-SAFE 1-888-344-7233

GRAPHIC SCALE

30 0 15 30 60 120

(IN FEET)
1 inch = 30 ft.

M:\PROJECTS\2518-01\CIVIL\DRAWINGS\CURRENT\C-2518-01_GRADING & DRAINAGE.DWG

APPROVED BY
TOWN OF ROCHESTER PLANNING BOARD

DATE SUBMITTED: _____

DATE ENDORSED: _____

DATE APPROVED: _____

_____

_____

_____

_____

_____

_____

TOWN OF ROCHESTER PLANNING BOARD

ISSUED FOR REVIEW
10-25-2019 REV. 6:12-01-2020

COMMONWEALTH OF MASSACHUSETTS
PHILIP L CORDEIRO
CIVIL
NO. 47083
REGISTERED PROFESSIONAL ENGINEER

Philip L Cordeiro
c=US, o=Allen and Major Associates Inc., ou=A01410C0000017598B4F D00002012, cn=Philip L Cordeiro
2021.01.26 14:24:06 -05'00'

PROFESSIONAL ENGINEER FOR
ALLEN & MAJOR ASSOCIATES, INC.

REV	DATE	DESCRIPTION
6	12-01-2020	PER PLANNING BOARD PEER REVIEW COMMENTS
5	10-23-2020	PER PLANNING BOARD PEER REVIEW COMMENTS
4	10-02-2020	PER PLANNING BOARD PEER REVIEW COMMENTS
3	07-31-2020	PER PLANNING BOARD PEER REVIEW COMMENTS
2	07-09-2020	PER NOI PEER REVIEW COMMENTS
1	05-18-2020	PER NOI PEER REVIEW COMMENTS

APPLICANT\OWNER:

STEEN
REALTY AND DEVELOPMENT CORPORATION
3 LEDGEWOOD BOULEVARD DARTMOUTH, MA 02747

PROJECT:

ROCHESTER CROSSROADS
SMART GROWTH DEVELOPMENT
CRANBERRY HIGHWAY
ROCHESTER, MA

PROJECT NO.	2518-01	DATE:	10-25-2019
SCALE:	1" = 30'	DWG. NAME:	C2518-01_
DESIGNED BY:	PGM/CMcC	CHECKED BY:	PC

PREPARED BY:

ALLEN & MAJOR ASSOCIATES, INC.
civil engineering ◆ land surveying
environmental consulting ◆ landscape architecture
www.allenmajor.com
10 MAIN STREET
LAKEVILLE MA 02347
TEL: (508) 523-1010
FAX: (508) 523-6309

WOBURN, MA ◆ LAKEVILLE, MA ◆ MANCHESTER, NH

THIS DRAWING HAS BEEN PREPARED IN DIGITAL FORMAT. CLIENT/CLIENT'S REPRESENTATIVE OR CONSULTANTS MAY BE PROVIDED COPIES OF DRAWINGS AND SPECIFICATIONS FOR HIS/HER INFORMATION AND/OR SPECIFIC USE ON THIS PROJECT. DUE TO THE POTENTIAL THAT THE PROVIDED INFORMATION MAY BE MODIFIED UNINTENTIONALLY OR OTHERWISE, ALLEN & MAJOR ASSOCIATES, INC. MAY REMOVE ALL INDICATION OF THE DOCUMENTS AUTHORSHIP ON THE DIGITAL MEDIA. PRINTED REPRESENTATIONS OR PORTABLE DOCUMENT FORMAT OF THE DRAWINGS AND SPECIFICATIONS ISSUED SHALL BE THE ONLY RECORD COPIES OF ALLEN & MAJOR ASSOCIATES, INC.'S WORK PRODUCT.

DRAWING TITLE:

GRADING & DRAINAGE PLAN

SHEET No.

C-105

Copyright©2020 Allen & Major Associates, Inc.
All Rights Reserved

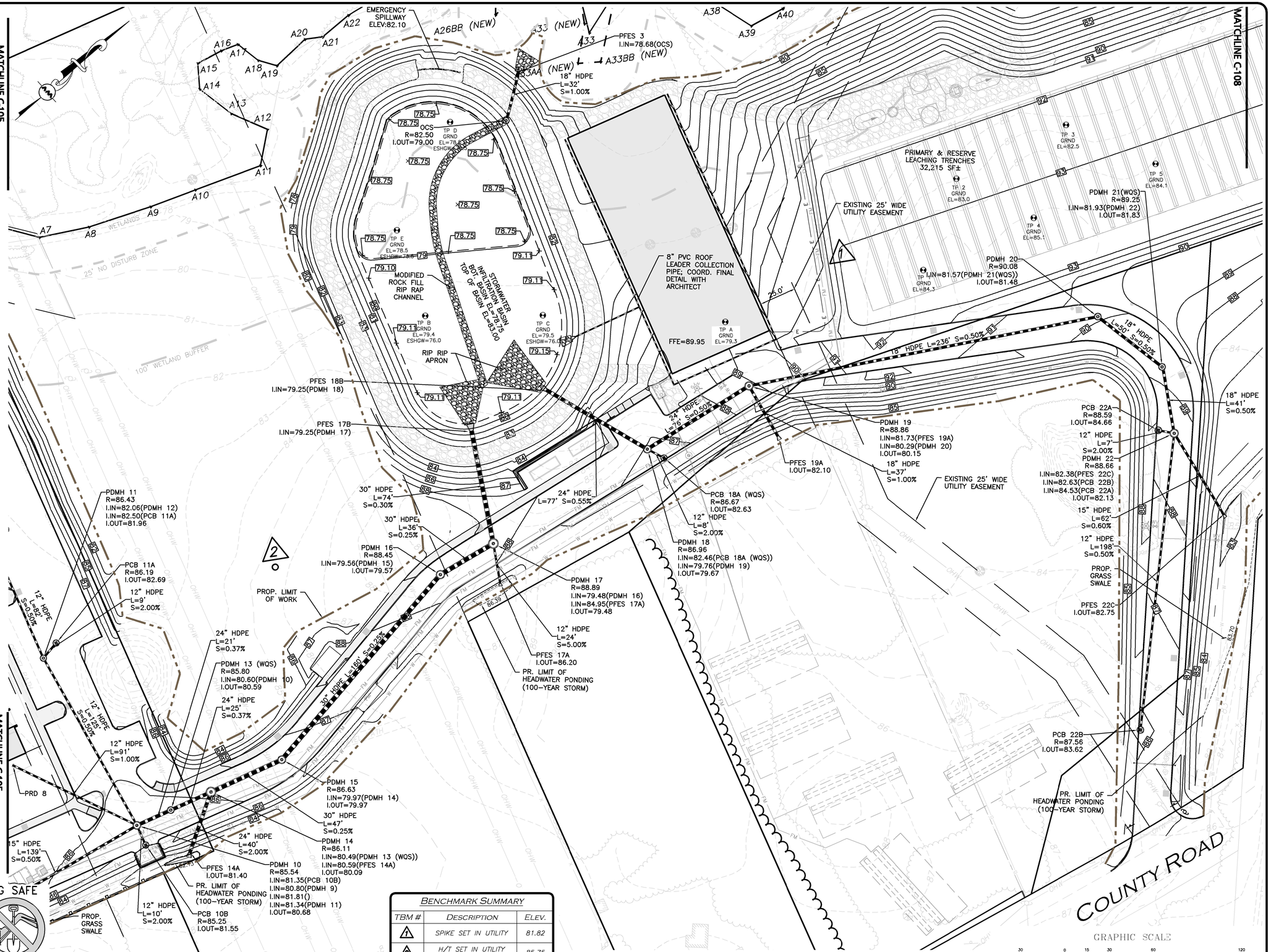

NOTES:

1) SEE SHEET C-107 FOR LEGEND.

BENCHMARK SUMMARY

TBM #	DESCRIPTION	ELEV.
1	SPIKE SET IN UTILITY	81.82
2	H/T SET IN UTILITY EASEMENT	85.75

NOTES

1. PRIOR TO THE START OF CONSTRUCTION, ADDITIONAL BENCHMARKS WILL BE SET.
2. VERTICAL DATUM IS NAVD 88.

M:\PROJECTS\2518-01\CIVIL\DRAWINGS\CURRENT\C-2518-01_GRADING & DRAINAGE.DWG

APPROVED BY
TOWN OF ROCHESTER PLANNING BOARD

DATE SUBMITTED: _____

DATE ENDORSED: _____

DATE APPROVED: _____

_____

_____

_____

_____

_____

_____

TOWN OF ROCHESTER PLANNING BOARD

ISSUED FOR REVIEW
10-25-2019 REV. 6:12-01-2020

COMMONWEALTH OF MASSACHUSETTS
PHILIP L CORDEIRO
CIVIL
NO. 47083
REGISTERED PROFESSIONAL ENGINEER

Philip L Cordeiro
c=US, o=Allen and Major Associates Inc., ou=A01410C0000017598BB4F D00002012, cn=Philip L Cordeiro
2021.01.26 14:24:32 -05'00'

PROFESSIONAL ENGINEER FOR
ALLEN & MAJOR ASSOCIATES, INC.

REV	DATE	DESCRIPTION
6	12-01-2020	PER PLANNING BOARD PEER REVIEW COMMENTS
5	10-23-2020	PER PLANNING BOARD PEER REVIEW COMMENTS
4	10-02-2020	PER PLANNING BOARD PEER REVIEW COMMENTS
3	07-31-2020	PER PLANNING BOARD PEER REVIEW COMMENTS
2	07-09-2020	PER NOI PEER REVIEW COMMENTS
1	05-18-2020	PER NOI PEER REVIEW COMMENTS

APPLICANT\OWNER:
STEEN REALTY AND DEVELOPMENT CORPORATION
3 LEDGEWOOD BOULEVARD DARTMOUTH, MA 02747

PROJECT:
ROCHESTER CROSSROADS
SMART GROWTH DEVELOPMENT
CRANBERRY HIGHWAY
ROCHESTER, MA

PROJECT NO.	2518-01	DATE:	10-25-2019
SCALE:	1" = 30'	DWG. NAME:	C2518-01_
DESIGNED BY:	PGM/CMcC	CHECKED BY:	PC

PREPARED BY:
ALLEN & MAJOR ASSOCIATES, INC.
civil engineering ◆ land surveying
environmental consulting ◆ landscape architecture
www.allenmajor.com
10 MAIN STREET
LAKEVILLE MA 02347
TEL: (508) 523-1010
FAX: (508) 523-6309
WOBURN, MA ◆ LAKEVILLE, MA ◆ MANCHESTER, NH

THIS DRAWING HAS BEEN PREPARED IN DIGITAL FORMAT. CLIENT/CLIENT'S REPRESENTATIVE OR CONSULTANTS MAY BE PROVIDED COPIES OF DRAWINGS AND SPECIFICATIONS FOR HIS/HER INFORMATION AND/OR SPECIFIC USE ON THIS PROJECT. DUE TO THE POTENTIAL THAT THE PROVIDED INFORMATION MAY BE MODIFIED UNINTENTIONALLY OR OTHERWISE, ALLEN & MAJOR ASSOCIATES, INC. MAY REMOVE ALL INDICATION OF THE DOCUMENT'S AUTHORSHIP ON THE DIGITAL MEDIA. PRINTED REPRESENTATIONS OR PORTABLE DOCUMENT FORMAT OF THE DRAWINGS AND SPECIFICATIONS ISSUED SHALL BE THE ONLY RECORD COPIES OF ALLEN & MAJOR ASSOCIATES, INC.'S WORK PRODUCT.

DRAWING TITLE:
GRADING & DRAINAGE PLAN

SHEET No.
C-106

Copyright©2020 Allen & Major Associates, Inc. All Rights Reserved

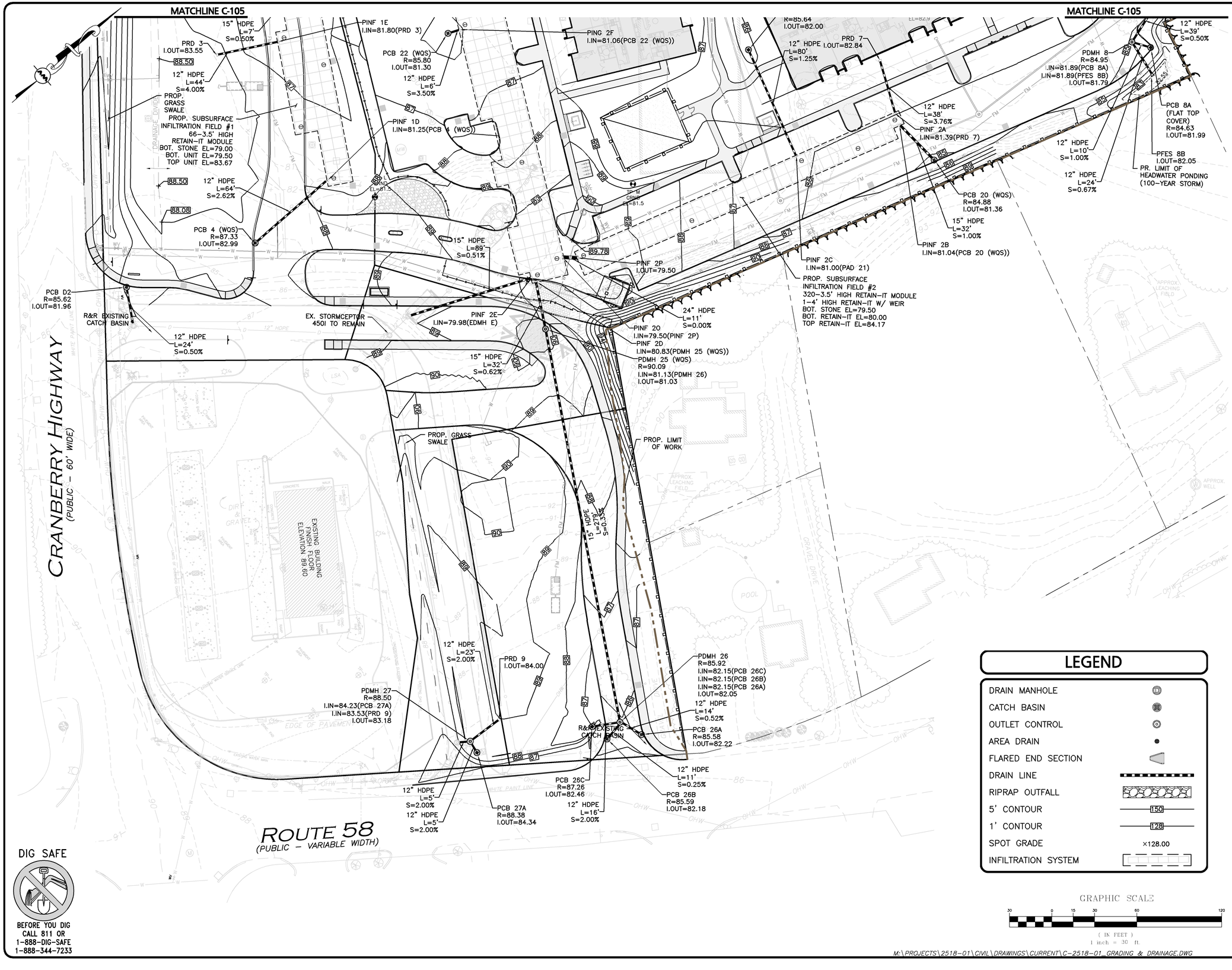

LEGEND

DRAIN MANHOLE	
CATCH BASIN	
OUTLET CONTROL	
AREA DRAIN	
FLARED END SECTION	
DRAIN LINE	
RIPRAP OUTFALL	
5' CONTOUR	150
1' CONTOUR	128
SPOT GRADE	×128.00
INFILTRATION SYSTEM	

GRAPHIC SCALE

30 0 15 30 60 120

(IN FEET)
1 inch = 30 ft.

DIG SAFE

BEFORE YOU DIG
CALL 811 OR
1-888-DIG-SAFE
1-888-344-7233

M:\PROJECTS\2518-01\CIVIL\DRAWINGS\CURRENT\C-2518-01_GRADING & DRAINAGE.DWG

APPROVED BY
TOWN OF ROCHESTER PLANNING BOARD

DATE SUBMITTED: _____

DATE ENDORSED: _____

DATE APPROVED: _____

_____

_____

_____

_____

_____

_____

TOWN OF ROCHESTER PLANNING BOARD

ISSUED FOR REVIEW
10-25-2019 REV. 6:12-01-2020

COMMONWEALTH OF MASSACHUSETTS
PHILIP L CORDEIRO
CIVIL
NO. 47083
REGISTERED PROFESSIONAL ENGINEER

Philip L Cordeiro
c=US, o=Allen and Major Associates Inc., ou=A01410C00000175788B4FD00002012, cn=Philip L Cordeiro
2021.01.26 14:24:58 -05'00'

PROFESSIONAL ENGINEER FOR
ALLEN & MAJOR ASSOCIATES, INC.

REV	DATE	DESCRIPTION
6	12-01-2020	PER PLANNING BOARD PEER REVIEW COMMENTS
5	10-23-2020	PER PLANNING BOARD PEER REVIEW COMMENTS
4	10-02-2020	PER PLANNING BOARD PEER REVIEW COMMENTS
3	07-31-2020	PER PLANNING BOARD PEER REVIEW COMMENTS
2	07-09-2020	PER NOI PEER REVIEW COMMENTS
1	05-18-2020	PER NOI PEER REVIEW COMMENTS

APPLICANT\OWNER:
STEEN
REALTY AND DEVELOPMENT CORPORATION
3 LEDGEWOOD BOULEVARD DARTMOUTH, MA 02747

PROJECT:
ROCHESTER CROSSROADS
SMART GROWTH DEVELOPMENT
CRANBERRY HIGHWAY
ROCHESTER, MA

PROJECT NO.	2518-01	DATE:	10-25-2019
SCALE:	1" = 30'	DWG. NAME:	C2518-01_
DESIGNED BY:	PGM/CMcC	CHECKED BY:	PC

PREPARED BY:
ALLEN & MAJOR ASSOCIATES, INC.
civil engineering ◆ land surveying
environmental consulting ◆ landscape architecture
www.allenmajor.com
10 MAIN STREET
LAKEVILLE MA 02347
TEL: (508) 523-1010
FAX: (508) 523-6309
WOBURN, MA ◆ LAKEVILLE, MA ◆ MANCHESTER, NH

THIS DRAWING HAS BEEN PREPARED IN DIGITAL FORMAT. CLIENT/CLIENT'S REPRESENTATIVE OR CONSULTANTS MAY BE PROVIDED COPIES OF DRAWINGS AND SPECIFICATIONS FOR HIS/HER INFORMATION AND/OR SPECIFIC USE ON THIS PROJECT. DUE TO THE POTENTIAL THAT THE PROVIDED INFORMATION MAY BE MODIFIED UNINTENTIONALLY OR OTHERWISE, ALLEN & MAJOR ASSOCIATES, INC. MAY REMOVE ALL INDICATION OF THE DOCUMENT'S AUTHORSHIP ON THE DIGITAL MEDIA. PRINTED REPRESENTATIONS OR PORTABLE DOCUMENT FORMAT OF THE DRAWINGS AND SPECIFICATIONS ISSUED SHALL BE THE ONLY RECORD COPIES OF ALLEN & MAJOR ASSOCIATES, INC.'S WORK PRODUCT.

DRAWING TITLE:
GRADING & DRAINAGE PLAN

SHEET No.
C-107

Copyright©2020 Allen & Major Associates, Inc.
All Rights Reserved

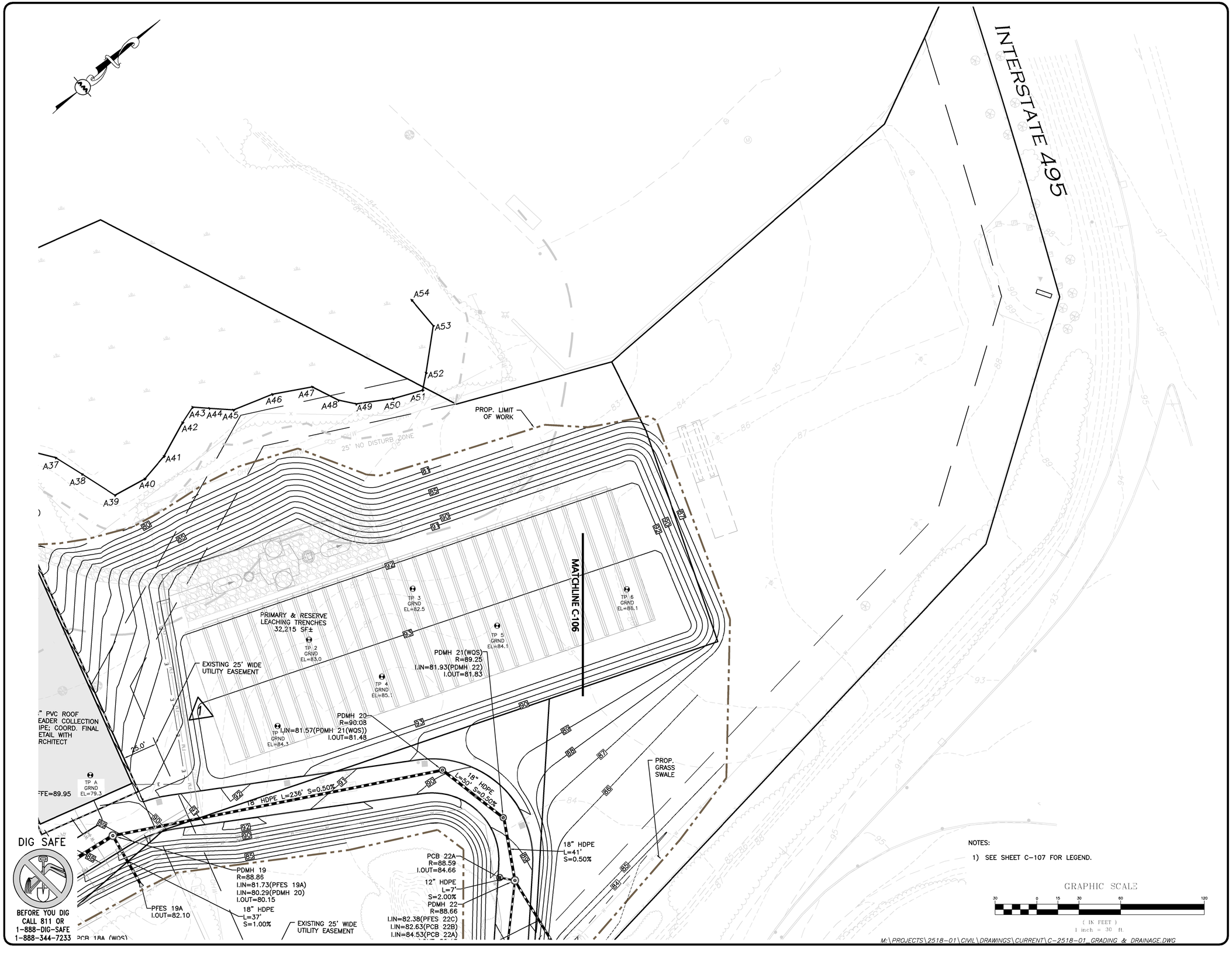

NOTES:

1) SEE SHEET C-107 FOR LEGEND.

GRAPHIC SCALE

30 0 15 30 60 120

(IN FEET)
1 inch = 30 ft.

M:\PROJECTS\2518-01\CIVIL\DRAWINGS\CURRENT\C-2518-01_GRADING & DRAINAGE.DWG

APPROVED BY
TOWN OF ROCHESTER PLANNING BOARD

DATE SUBMITTED: _____

DATE ENDORSED: _____

DATE APPROVED: _____

_____

_____

_____

_____

_____

_____

TOWN OF ROCHESTER PLANNING BOARD

ISSUED FOR REVIEW
10-25-2019 REV. 6:12-01-2020

COMMONWEALTH OF MASSACHUSETTS
PHILIP L. CORDEIRO
CIVIL
NO. 47083
REGISTERED PROFESSIONAL ENGINEER

Philip L Cordeiro
c=US, o=Allen and Major Associates Inc., ou=A01410C0000017598BB4FD00002012, cn=Philip L Cordeiro
2021.01.26 14:25:23 -05'00'

PROFESSIONAL ENGINEER FOR
ALLEN & MAJOR ASSOCIATES, INC.

REV	DATE	DESCRIPTION
6	12-01-2020	PER PLANNING BOARD PEER REVIEW COMMENTS
5	10-23-2020	PER PLANNING BOARD PEER REVIEW COMMENTS
4	10-02-2020	PER PLANNING BOARD PEER REVIEW COMMENTS
3	07-31-2020	PER PLANNING BOARD PEER REVIEW COMMENTS
2	07-09-2020	PER NOI PEER REVIEW COMMENTS
1	05-18-2020	PER NOI PEER REVIEW COMMENTS

APPLICANT\OWNER:

STEEN
REALTY AND DEVELOPMENT CORPORATION
3 LEDGEWOOD BOULEVARD DARTMOUTH, MA 02747

PROJECT:

ROCHESTER CROSSROADS
SMART GROWTH DEVELOPMENT
CRANBERRY HIGHWAY
ROCHESTER, MA

PROJECT NO.	2518-01	DATE:	10-25-2019
SCALE:	1" = 30'	DWG. NAME:	C2518-01_
DESIGNED BY:	PGM/CMcC	CHECKED BY:	PC

PREPARED BY:

ALLEN & MAJOR ASSOCIATES, INC.
civil engineering ◆ land surveying
environmental consulting ◆ landscape architecture
www.allenmajor.com
10 MAIN STREET
LAKEVILLE MA 02347
TEL: (508) 523-1010
FAX: (508) 523-6309
WOBURN, MA ◆ LAKEVILLE, MA ◆ MANCHESTER, NH

THIS DRAWING HAS BEEN PREPARED IN DIGITAL FORMAT. CLIENT/CLIENTS REPRESENTATIVE OR CONSULTANTS MAY BE PROVIDED COPIES OF DRAWINGS AND SPECIFICATIONS FOR HIS/HER INFORMATION AND/OR SPECIFIC USE ON THIS PROJECT. DUE TO THE POTENTIAL THAT THE PROVIDED INFORMATION MAY BE MODIFIED UNINTENTIONALLY OR OTHERWISE, ALLEN & MAJOR ASSOCIATES, INC. MAY REMOVE ALL INDICATION OF THE DOCUMENT'S AUTHORSHIP ON THE DIGITAL MEDIA. PRINTED REPRESENTATIONS OR PORTABLE DOCUMENT FORMAT OF THE DRAWINGS AND SPECIFICATIONS ISSUED SHALL BE THE ONLY RECORD COPIES OF ALLEN & MAJOR ASSOCIATES, INC.'S WORK PRODUCT.

DRAWING TITLE:

GRADING & DRAINAGE PLAN

SHEET No.

C-108

Copyright©2020 Allen & Major Associates, Inc.
All Rights Reserved

CAP FOR FUTURE EXTENSION

6" FIRE HYDRANT SERVICE LINE (TYP)

12"x12" TEE

2" DOMESTIC WATER SERVICE LINE

6" PVC Pipe
L=64'
S=3.50%
PSMH 6B
R=85.31
I.IN=79.98(PSTUB 1)
I.OUT=79.88

6" WATER SERVICE

CLUB HOUSE

6" PVC Pipe
L=4'
S=2.00%

GAS LINE (TYP.)

PSTUB 1
I.OUT=82.36

FUTURE DEVELOPMENT

PROPERTY LINE

PSTUB 2
I.OUT=83.56

CAP FOR FUTURE EXTENSION

FUTURE USE COMMERCIAL SEPTIC TANK & PUMP CHAMBER

A-A

12" C900 WATER MAIN

CAP FOR FUTURE EXTENSION

6" PVC Pipe
L=3'
S=2.00%

6" FIRE HYDRANT SERVICE LINE (TYP)

PSTUB 3
I.OUT=83.86

CAP FOR FUTURE EXTENSION

B-B

FUTURE USE COMMERCIAL SEPTIC TANK & PUMP CHAMBER

CAP FOR FUTURE EXTENSION

FUTURE DEVELOPMENT

FUTURE USE COMMERCIAL SEPTIC TANK & PUMP CHAMBER

CRANBERRY HIGHWAY
(Route 28 - 80' wide)
(Route 28 - Sta@ 1+177)

MATCHLINE C-111

MATCHLINE C-111

8" PVC Pipe
L=238'
S=1.00%

8" PVC Pipe
L=116'
S=2.00%

PSTUB 5
I.OUT=81.77

GAS VALVE (TYP.)

PSTUB 6
I.OUT=82.67

8" PVC Pipe
L=13'
S=4.00%

PROP. DOMESTIC WATER SERVICE (TYP)

PROP. WATER FIRE SERVICE (TYP)

PSMH 6A
R=86.79
I.IN=79.37(PSTUB 5)
I.IN=82.01(PSTUB 6)
I.IN=77.46(PSMH 6B)
I.OUT=78.54

BUILDING A
4 STORY
64 UNITS

BUILDING B
4 STORY
32 UNITS

BUILDING C
4 STORY
64 UNITS

BUILDING D
4 STORY
48 UNITS

WATER BOOSTER PUMP

UTILITY ENCLOSURE

POOL HOUSE

POOL

PLAY GROUND

GRILLS

6" FIRE SERVICE & 2" DOMESTIC SERVICE LINE (TYP) OR AS SPECIFIED BY MEP ENGINEER

8" WATER SERVICE LINE (BOOSTED)

6" HYDRANT FIRE SERVICE LINE (BOOSTED)

8" WATER SERVICE (BOOSTED)

PC A
R=76.04
I.IN=75.31(PSMH 8)

8" PVC Pipe
L=7'
S=1.00%

PSMH 8
R=85.42
I.IN=75.50(PSMH 7)
I.OUT=75.40

WATER/SEWER CROSSING

PSTUB
I.OUT=8
8" P
L=69
S=5

MATCHLINE C-110

100' WETLAND BUFFER

25' NO DISTURB ZONE

150.5'

A2

A3

A4

A5

A6

N/F NEW ROCHESTER REALTY TRUST BK.16836/PG.268

N/F WILLIAM DUNN BK.17563/PG.4

APPROX. CESSPOOL

APPROX. LEACHING

CONC. PAD

DIG SAFE

BEFORE YOU DIG CALL 811 OR 1-888-DIG-SAFE 1-888-344-7233

NOTES:

1) SEE SHEET C-111 FOR LEGEND.

GRAPHIC SCALE

30 0 15 30 60 120

(IN FEET)
1 inch = 30 ft.

M:\PROJECTS\2518-01\CIVIL\DRAWINGS\CURRENT\C-2518-01_UTILITIES.DWG

APPROVED BY
TOWN OF ROCHESTER PLANNING BOARD

DATE SUBMITTED: _____

DATE ENDORSED: _____

DATE APPROVED: _____

_____

_____

_____

_____

_____

_____

_____

TOWN OF ROCHESTER PLANNING BOARD

ISSUED FOR REVIEW
10-25-2019 REV. 6:12-01-2020

COMMONWEALTH OF MASSACHUSETTS
PHILIP L CORDEIRO
CIVIL
NO. 47083
REGISTERED PROFESSIONAL ENGINEER

Philip L Cordeiro
c=US, o=Allen and Major Associates Inc., ou=A01410C0000017579BB4FD00002012, cn=Philip L Cordeiro
2021.01.26 14:25:48 -05'00'

PROFESSIONAL ENGINEER FOR
ALLEN & MAJOR ASSOCIATES, INC.

REV	DATE	DESCRIPTION
6	12-01-2020	PER PLANNING BOARD PEER REVIEW COMMENTS
5	10-23-2020	PER PLANNING BOARD PEER REVIEW COMMENTS
4	10-02-2020	PER PLANNING BOARD PEER REVIEW COMMENTS
3	07-31-2020	PER PLANNING BOARD PEER REVIEW COMMENTS
2	07-09-2020	PER NOI PEER REVIEW COMMENTS
1	05-18-2020	PER NOI PEER REVIEW COMMENTS

APPLICANT\OWNER:

STEEN REALTY AND DEVELOPMENT CORPORATION
3 LEDGEWOOD BOULEVARD DARTMOUTH, MA 02747

PROJECT:

ROCHESTER CROSSROADS
SMART GROWTH DEVELOPMENT
CRANBERRY HIGHWAY
ROCHESTER, MA

PROJECT NO.	2518-01	DATE:	10-25-2019
SCALE:	1" = 30'	DWG. NAME:	C2518-01_
DESIGNED BY:	PGM/CMcC	CHECKED BY:	PC

PREPARED BY:

ALLEN & MAJOR ASSOCIATES, INC.
civil engineering ◆ land surveying
environmental consulting ◆ landscape architecture
www.allenmajor.com
10 MAIN STREET
LAKEVILLE MA 02347
TEL: (508) 523-1010
FAX: (508) 523-6309
WOBURN, MA ◆ LAKEVILLE, MA ◆ MANCHESTER, NH

THIS DRAWING HAS BEEN PREPARED IN DIGITAL FORMAT. CLIENT/CLIENTS REPRESENTATIVE OR CONSULTANTS MAY BE PROVIDED COPIES OF DRAWINGS AND SPECIFICATIONS FOR HIS/HER INFORMATION AND/OR SPECIFIC USE ON THIS PROJECT. DUE TO THE POTENTIAL THAT THE PROVIDED INFORMATION MAY BE MODIFIED UNINTENTIONALLY OR OTHERWISE, ALLEN & MAJOR ASSOCIATES, INC. MAY REMOVE ALL INDICATION OF THE DOCUMENT'S AUTHORSHIP ON THE DIGITAL MEDIA. PRINTED REPRESENTATIONS OR PORTABLE DOCUMENT FORMAT OF THE DRAWINGS AND SPECIFICATIONS ISSUED SHALL BE THE ONLY RECORD COPIES OF ALLEN & MAJOR ASSOCIATES, INC.'S WORK PRODUCT.

DRAWING TITLE: UTILITIES PLAN

SHEET No. C-109

Copyright©2020 Allen & Major Associates, Inc.
All Rights Reserved

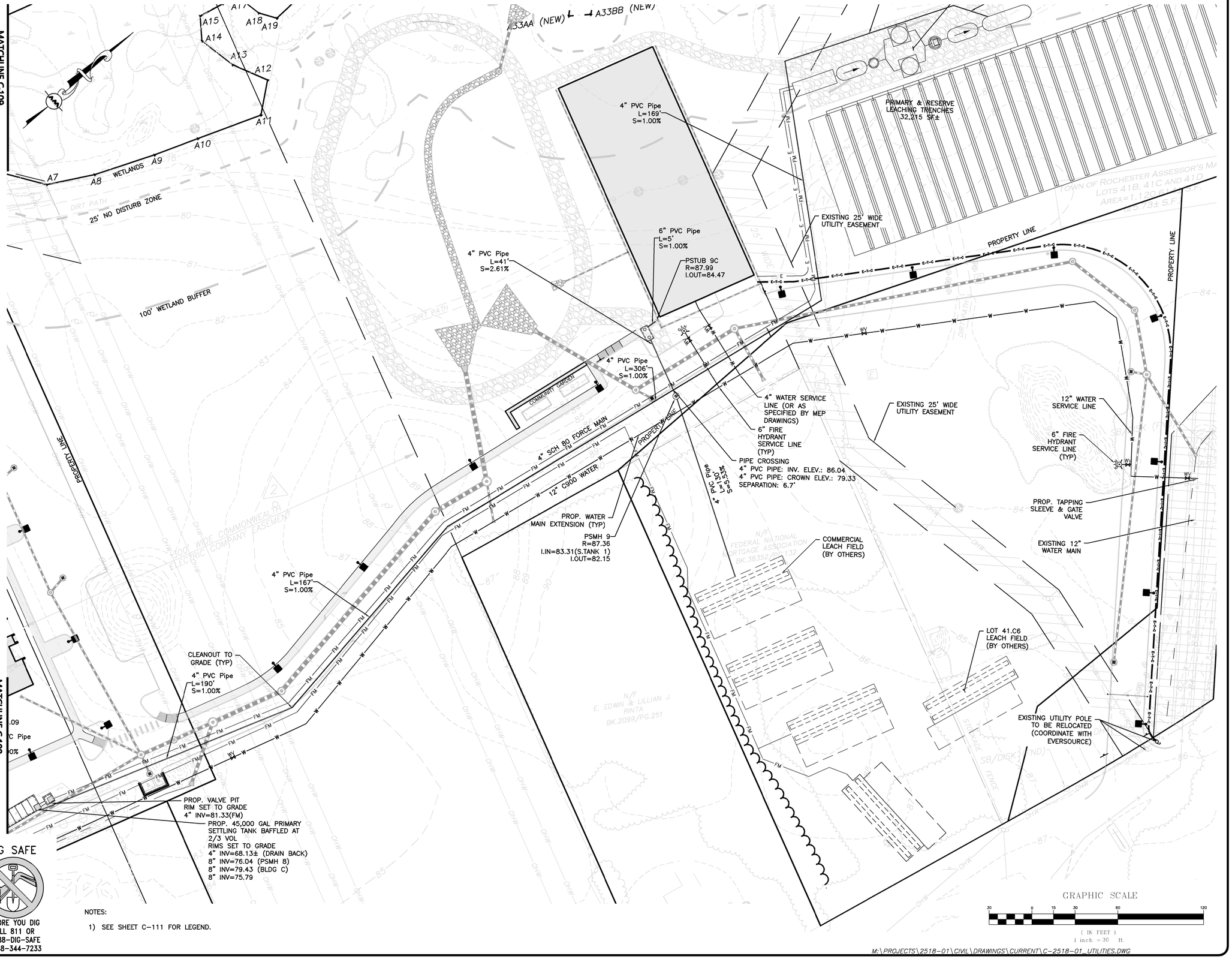

APPROVED BY
TOWN OF ROCHESTER PLANNING BOARD

DATE SUBMITTED: _____

DATE ENDORSED: _____

DATE APPROVED: _____

_____

_____

_____

_____

_____

_____

_____

TOWN OF ROCHESTER PLANNING BOARD

ISSUED FOR REVIEW
10-25-2019 REV. 6:12-01-2020

COMMONWEALTH OF MASSACHUSETTS
PHILIP L. CORDEIRO
CIVIL
NO. 47083
REGISTERED PROFESSIONAL ENGINEER

Philip L Cordeiro
c=US, o=Allen and Major Associates Inc., ou=A01410C000000175988B4FD00002012, cn=Philip L Cordeiro
2021.01.26 14:26:36 -05'00'

PROFESSIONAL ENGINEER FOR
ALLEN & MAJOR ASSOCIATES, INC.

REV	DATE	DESCRIPTION
6	12-01-2020	PER PLANNING BOARD PEER REVIEW COMMENTS
5	10-23-2020	PER PLANNING BOARD PEER REVIEW COMMENTS
4	10-02-2020	PER PLANNING BOARD PEER REVIEW COMMENTS
3	07-31-2020	PER PLANNING BOARD PEER REVIEW COMMENTS
2	07-09-2020	PER NOI PEER REVIEW COMMENTS
1	05-18-2020	PER NOI PEER REVIEW COMMENTS

APPLICANT\OWNER:
STEEN
REALTY AND DEVELOPMENT CORPORATION
3 LEDGEWOOD BOULEVARD DARTMOUTH, MA 02747

PROJECT:
ROCHESTER CROSSROADS
SMART GROWTH DEVELOPMENT
CRANBERRY HIGHWAY
ROCHESTER, MA

PROJECT NO.	2518-01	DATE:	10-25-2019
SCALE:	1" = 30'	DWG. NAME:	C2518-01_
DESIGNED BY:	PGM/CMcC	CHECKED BY:	PC

PREPARED BY:
ALLEN & MAJOR ASSOCIATES, INC.
civil engineering ◆ land surveying
environmental consulting ◆ landscape architecture
www.allenmajor.com
10 MAIN STREET
LAKEVILLE MA 02347
TEL: (508) 523-1010
FAX: (508) 523-6309

WOBURN, MA ◆ LAKEVILLE, MA ◆ MANCHESTER, NH

THIS DRAWING HAS BEEN PREPARED IN DIGITAL FORMAT. CLIENT/CLIENT'S REPRESENTATIVE OR CONSULTANTS MAY BE PROVIDED COPIES OF DRAWINGS AND SPECIFICATIONS FOR HIS/HER INFORMATION AND/OR SPECIFIC USE ON THIS PROJECT. DUE TO THE POTENTIAL THAT THE PROVIDED INFORMATION MAY BE MODIFIED UNINTENTIONALLY OR OTHERWISE, ALLEN & MAJOR ASSOCIATES, INC. MAY REMOVE ALL INDICATION OF THE DOCUMENT'S AUTHORSHIP ON THE DIGITAL MEDIA. PRINTED REPRESENTATIONS OR PORTABLE DOCUMENT FORMAT OF THE DRAWINGS AND SPECIFICATIONS ISSUED SHALL BE THE ONLY RECORD COPIES OF ALLEN & MAJOR ASSOCIATES, INC.'S WORK PRODUCT.

DRAWING TITLE:
UTILITIES PLAN

SHEET No.
C-110

Copyright©2020 Allen & Major Associates, Inc.
All Rights Reserved

MATCHLINE C-109

MATCHLINE C-109

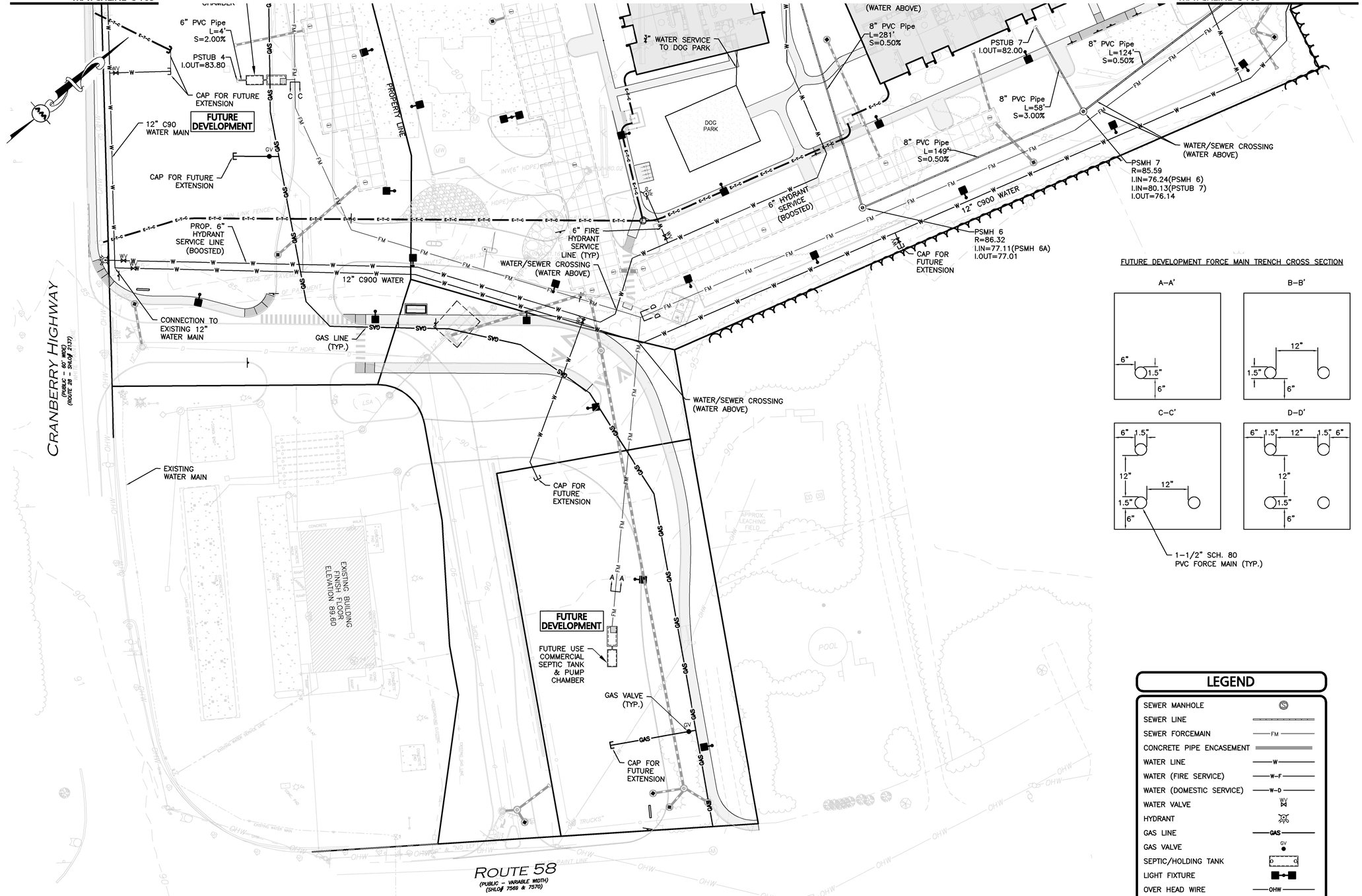

FUTURE DEVELOPMENT FORCE MAIN TRENCH CROSS SECTION

LEGEND

SEWER MANHOLE	S
SEWER LINE	
SEWER FORCEMAIN	FM
CONCRETE PIPE ENCASEMENT	
WATER LINE	W
WATER (FIRE SERVICE)	W–F
WATER (DOMESTIC SERVICE)	W–D
WATER VALVE	WV
HYDRANT	
GAS LINE	GAS
GAS VALVE	GV
SEPTIC/HOLDING TANK	
LIGHT FIXTURE	
OVER HEAD WIRE	OHW
UTILILTY POLE	
ELECTRIC MANHOLE/SPLICE BOX	E
ELECTRICAL CONDUIT	E — E
ELEC/TELE/CABLE CONDUIT	E-T-C

GRAPHIC SCALE

30 0 15 30 60 120

(IN FEET)
1 inch = 30 ft.

M:\PROJECTS\2518-01\CIVIL\DRAWINGS\CURRENT\C-2518-01_UTILITIES.DWG

DIG SAFE

BEFORE YOU DIG
CALL 811 OR
1-888-DIG-SAFE
1-888-344-7233

APPROVED BY
TOWN OF ROCHESTER PLANNING BOARD

DATE SUBMITTED: _____

DATE ENDORSED: _____

DATE APPROVED: _____

_____

_____

_____

_____

_____

_____

_____

TOWN OF ROCHESTER PLANNING BOARD

ISSUED FOR REVIEW
10-25-2019 REV. 6:12-01-2020

COMMONWEALTH OF MASSACHUSETTS
PHILIP L CORDEIRO
CIVIL
NO. 47083
REGISTERED PROFESSIONAL ENGINEER

Philip L Cordeiro
c=US, o=Allen and Major Associates Inc., ou=A01410C0000017598BB4FD00002012, cn=Philip L Cordeiro
2021.01.26 14:27:03 -05'00'

PROFESSIONAL ENGINEER FOR
ALLEN & MAJOR ASSOCIATES, INC.

REV	DATE	DESCRIPTION
6	12-01-2020	PER PLANNING BOARD PEER REVIEW COMMENTS
5	10-23-2020	PER PLANNING BOARD PEER REVIEW COMMENTS
4	10-02-2020	PER PLANNING BOARD PEER REVIEW COMMENTS
3	07-31-2020	PER PLANNING BOARD PEER REVIEW COMMENTS
2	07-09-2020	PER NOI PEER REVIEW COMMENTS
1	05-18-2020	PER NOI PEER REVIEW COMMENTS

APPLICANT\OWNER:

STEEN
REALTY AND DEVELOPMENT CORPORATION
3 LEDGEWOOD BOULEVARD DARTMOUTH, MA 02747

PROJECT:

ROCHESTER CROSSROADS
SMART GROWTH DEVELOPMENT
CRANBERRY HIGHWAY
ROCHESTER, MA

PROJECT NO.	2518-01	DATE:	10-25-2019
SCALE:	1" = 30'	DWG. NAME:	C2518-01_
DESIGNED BY:	PGM/CMcC	CHECKED BY:	PC

PREPARED BY:

ALLEN & MAJOR ASSOCIATES, INC.
civil engineering ◆ land surveying
environmental consulting ◆ landscape architecture
www.allenmajor.com
10 MAIN STREET
LAKEVILLE MA 02347
TEL: (508) 523-1010
FAX: (508) 523-6309

WOBURN, MA ◆ LAKEVILLE, MA ◆ MANCHESTER, NH

THIS DRAWING HAS BEEN PREPARED IN DIGITAL FORMAT. CLIENT/CLIENT'S REPRESENTATIVE OR CONSULTANTS MAY BE PROVIDED COPIES OF DRAWINGS AND SPECIFICATIONS FOR HIS/HER INFORMATION AND/OR SPECIFIC USE ON THIS PROJECT. DUE TO THE POTENTIAL THAT THE PROVIDED INFORMATION MAY BE MODIFIED UNINTENTIONALLY OR OTHERWISE, ALLEN & MAJOR ASSOCIATES, INC. MAY REMOVE ALL INDICATION OF THE DOCUMENT'S AUTHORSHIP ON THE DIGITAL MEDIA. PRINTED REPRESENTATIONS OR PORTABLE DOCUMENT FORMAT OF THE DRAWINGS AND SPECIFICATIONS ISSUED SHALL BE THE ONLY RECORD COPIES OF ALLEN & MAJOR ASSOCIATES, INC.'S WORK PRODUCT.

DRAWING TITLE:

UTILITIES PLAN

SHEET No.

C-111

Copyright©2020 Allen & Major Associates, Inc.
All Rights Reserved

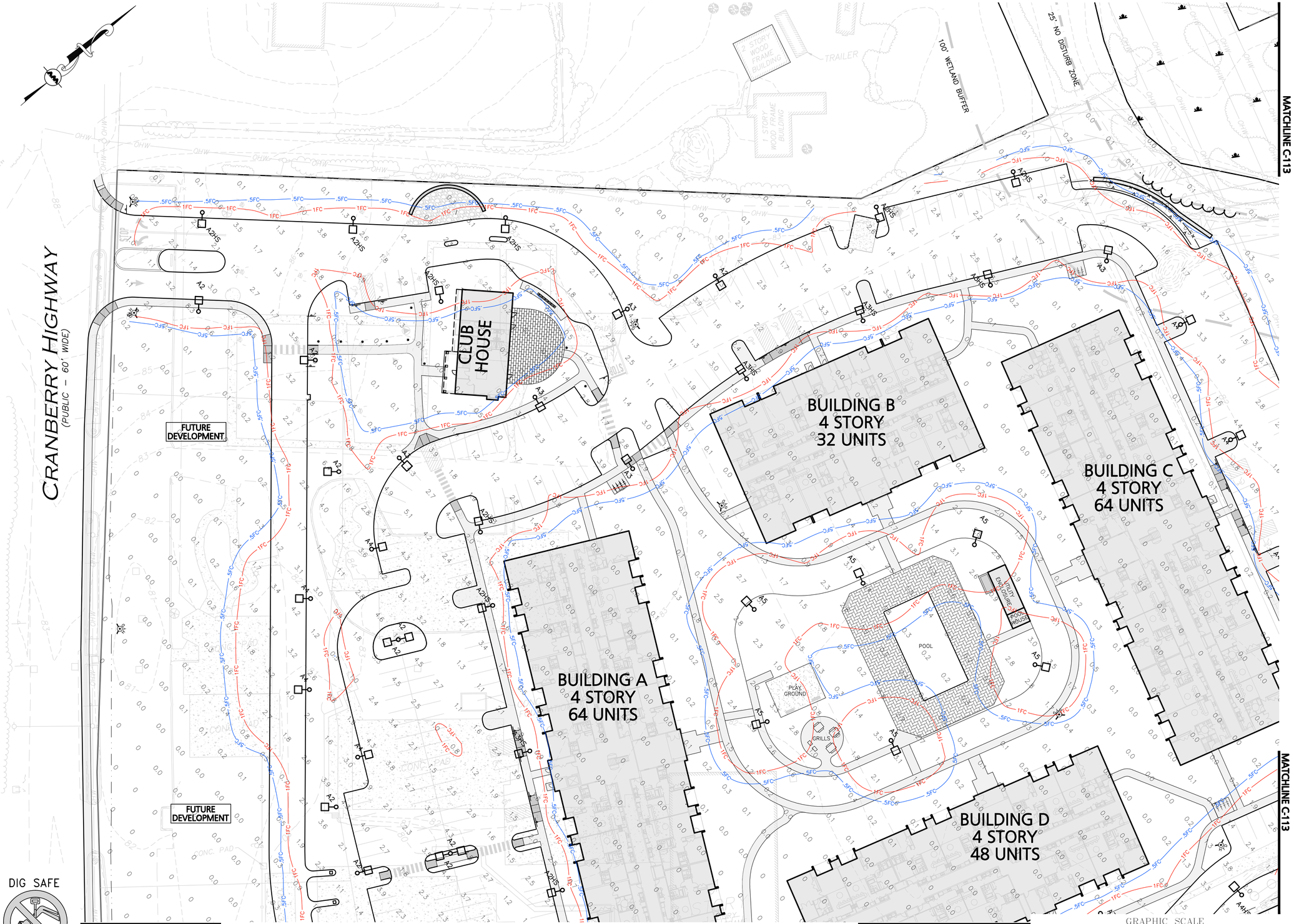

DIG SAFE

BEFORE YOU DIG
CALL 811 OR
1-888-DIG-SAFE
1-888-344-7233

NOTES:

1) SEE SHEET C-114 FOR LEGEND AND LUMINAIRE SCHEDULE.

GRAPHIC SCALE

30 0 15 30 60 120

(IN FEET)
1 inch = 30 ft.

M:\PROJECTS\2518-01\CIVIL\DRAWINGS\CURRENT\C-2518-01_LIGHTING.DWG

APPROVED BY
TOWN OF ROCHESTER PLANNING BOARD

DATE SUBMITTED: _____

DATE ENDORSED: _____

DATE APPROVED: _____

_____

_____

_____

_____

_____

_____

_____

TOWN OF ROCHESTER PLANNING BOARD

ISSUED FOR REVIEW
10-25-2019 REV. 6:12-01-2020

COMMONWEALTH OF MASSACHUSETTS
PHILIP L CORDEIRO
CIVIL
NO. 47083
REGISTERED PROFESSIONAL ENGINEER

Philip L Cordeiro
c=US, o=Allen and Major Associates Inc., ou=A01410C0000017598BB4FD00002012, cn=Philip L Cordeiro
2021.01.26 14:27:36 -05'00'

PROFESSIONAL ENGINEER FOR
ALLEN & MAJOR ASSOCIATES, INC.

REV	DATE	DESCRIPTION
6	12-01-2020	PER PLANNING BOARD PEER REVIEW COMMENTS
5	10-23-2020	PER PLANNING BOARD PEER REVIEW COMMENTS
4	10-02-2020	PER PLANNING BOARD PEER REVIEW COMMENTS
3	07-31-2020	PER PLANNING BOARD PEER REVIEW COMMENTS
2	07-09-2020	PER NOI PEER REVIEW COMMENTS
1	05-18-2020	PER NOI PEER REVIEW COMMENTS

APPLICANT\OWNER:

STEEN
REALTY AND DEVELOPMENT CORPORATION
3 LEDGEWOOD BOULEVARD DARTMOUTH, MA 02747

PROJECT:

ROCHESTER CROSSROADS
SMART GROWTH DEVELOPMENT
CRANBERRY HIGHWAY
ROCHESTER, MA

PROJECT NO.	2518-01	DATE:	10-25-2019
SCALE:	1" = 30'	DWG. NAME:	C2518-01_
DESIGNED BY:	PGM/CMcC	CHECKED BY:	PC

PREPARED BY:

ALLEN & MAJOR ASSOCIATES, INC.
civil engineering ◆ land surveying
environmental consulting ◆ landscape architecture
www.allenmajor.com
10 MAIN STREET
LAKEVILLE MA 02347
TEL: (508) 923-1010
FAX: (508) 923-6309

WOBURN, MA ◆ LAKEVILLE, MA ◆ MANCHESTER, NH

THIS DRAWING HAS BEEN PREPARED IN DIGITAL FORMAT. CLIENT/CLIENT'S REPRESENTATIVE OR CONSULTANTS MAY BE PROVIDED COPIES OF DRAWINGS AND SPECIFICATIONS FOR HIS/HER INFORMATION AND/OR SPECIFIC USE ON THIS PROJECT. DUE TO THE POTENTIAL THAT THE PROVIDED INFORMATION MAY BE MODIFIED UNINTENTIONALLY OR OTHERWISE, ALLEN & MAJOR ASSOCIATES, INC. MAY REMOVE ALL INDICATION OF THE DOCUMENTS AUTHORSHIP ON THE DIGITAL MEDIA. PRINTED REPRESENTATIONS OR PORTABLE DOCUMENT FORMAT OF THE DRAWINGS AND SPECIFICATIONS ISSUED SHALL BE THE ONLY RECORD COPIES OF ALLEN & MAJOR ASSOCIATES, INC.'S WORK PRODUCT.

DRAWING TITLE:

PHOTOMETRICS PLAN

SHEET No.

C-112

Copyright©2020 Allen & Major Associates, Inc.
All Rights Reserved

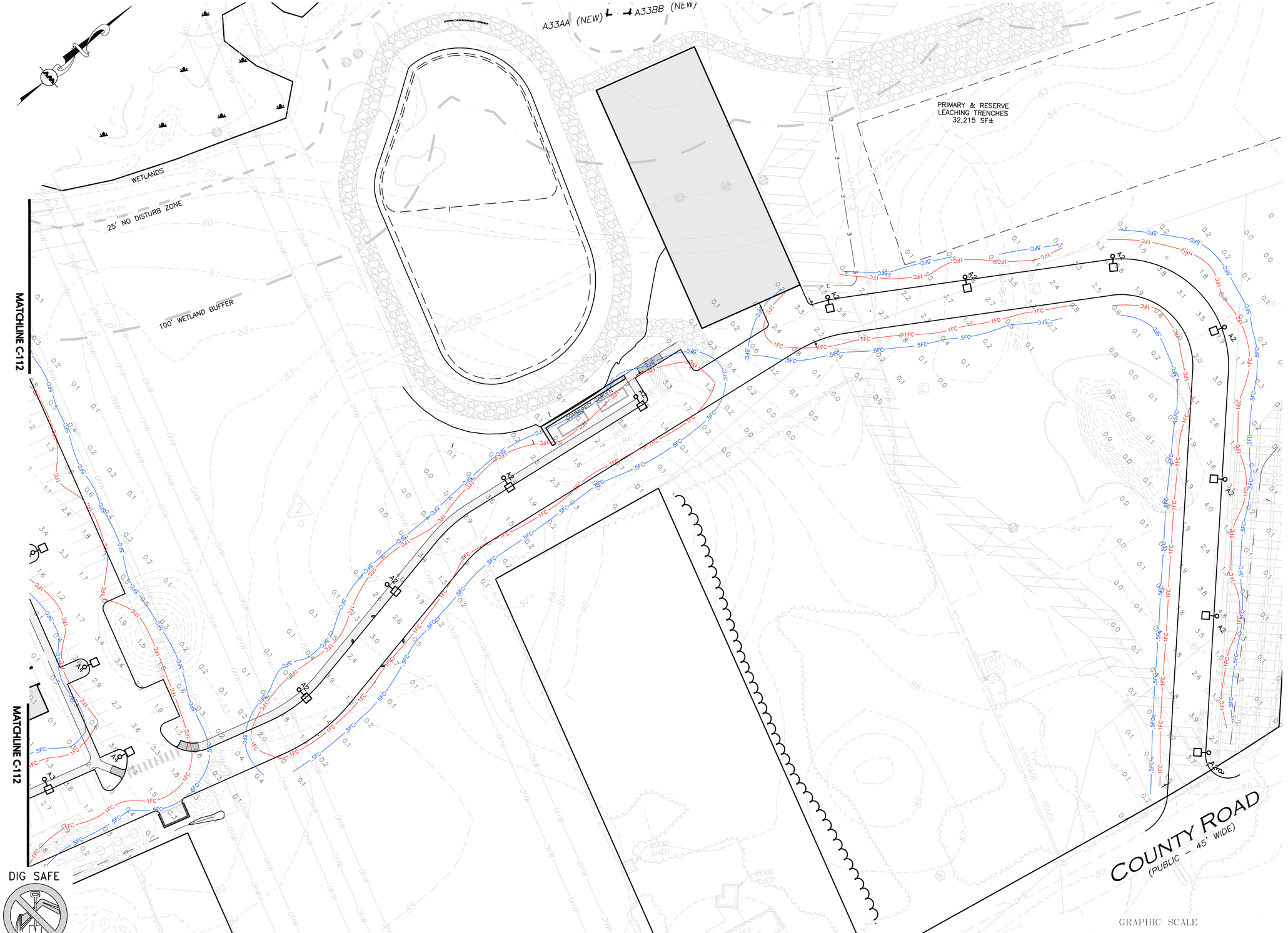

DIG SAFE

BEFORE YOU DIG
CALL 811 OR
1-888-DIG-SAFE
1-888-344-7233

NOTES:

1) SEE SHEET C-114 FOR LEGEND AND LUMINAIRE SCHEDULE.

GRAPHIC SCALE

30 0 15 30 60 120

(IN FEET)
1 inch = 30 ft.

M:\PROJECTS\2518-01\CIVIL\DRAWINGS\CURRENT\C-2518-01_LIGHTING.DWG

APPROVED BY
TOWN OF ROCHESTER PLANNING BOARD

DATE SUBMITTED: _____

DATE ENDORSED: _____

DATE APPROVED: _____

_____

_____

_____

_____

_____

_____

TOWN OF ROCHESTER PLANNING BOARD

ISSUED FOR REVIEW
10-25-2019 REV. 6:12-01-2020

COMMONWEALTH OF MASSACHUSETTS
PHILIP L CORDEIRO
CIVIL
NO. 47083
REGISTERED PROFESSIONAL ENGINEER

Philip L Cordeiro
c=US, o=Allen and Major Associates Inc., ou=A01410C0000017598B84FD00002012, cn=Philip L Cordeiro
2021.01.26 14:28:05 -05'00'

PROFESSIONAL ENGINEER FOR
ALLEN & MAJOR ASSOCIATES, INC.

REV	DATE	DESCRIPTION
6	12-01-2020	PER PLANNING BOARD PEER REVIEW COMMENTS
5	10-23-2020	PER PLANNING BOARD PEER REVIEW COMMENTS
4	10-02-2020	PER PLANNING BOARD PEER REVIEW COMMENTS
3	07-31-2020	PER PLANNING BOARD PEER REVIEW COMMENTS
2	07-09-2020	PER NOI PEER REVIEW COMMENTS
1	05-18-2020	PER NOI PEER REVIEW COMMENTS

APPLICANT\OWNER:

STEEN
REALTY AND DEVELOPMENT CORPORATION
3 LEDGEWOOD BOULEVARD DARTMOUTH, MA 02747

PROJECT:

ROCHESTER CROSSROADS
SMART GROWTH DEVELOPMENT
CRANBERRY HIGHWAY
ROCHESTER, MA

PROJECT NO.	2518-01	DATE:	10-25-2019
SCALE:	1" = 30'	DWG. NAME:	C2518-01_
DESIGNED BY:	PGM/CMcC	CHECKED BY:	PC

PREPARED BY:

ALLEN & MAJOR ASSOCIATES, INC.
civil engineering ◆ land surveying
environmental consulting ◆ landscape architecture
www.allenmajor.com
10 MAIN STREET
LAKEVILLE MA 02347
TEL: (508) 923-1010
FAX: (508) 923-6309
WOBURN, MA ◆ LAKEVILLE, MA ◆ MANCHESTER, NH

THIS DRAWING HAS BEEN PREPARED IN DIGITAL FORMAT. CLIENT/CLIENT'S REPRESENTATIVE OR CONSULTANTS MAY BE PROVIDED COPIES OF DRAWINGS AND SPECIFICATIONS FOR HIS/HER INFORMATION AND/OR SPECIFIC USE ON THIS PROJECT. DUE TO THE POTENTIAL THAT THE PROVIDED INFORMATION MAY BE MODIFIED UNINTENTIONALLY OR OTHERWISE, ALLEN & MAJOR ASSOCIATES, INC. MAY REMOVE ALL INDICATION OF THE DOCUMENT'S AUTHORSHIP ON THE DIGITAL MEDIA. PRINTED REPRESENTATIONS OR PORTABLE DOCUMENT FORMAT OF THE DRAWINGS AND SPECIFICATIONS ISSUED SHALL BE THE ONLY RECORD COPIES OF ALLEN & MAJOR ASSOCIATES, INC.'S WORK PRODUCT.

DRAWING TITLE:

PHOTOMETRICS PLAN

SHEET No.

C-113

Copyright©2020 Allen & Major Associates, Inc.
All Rights Reserved

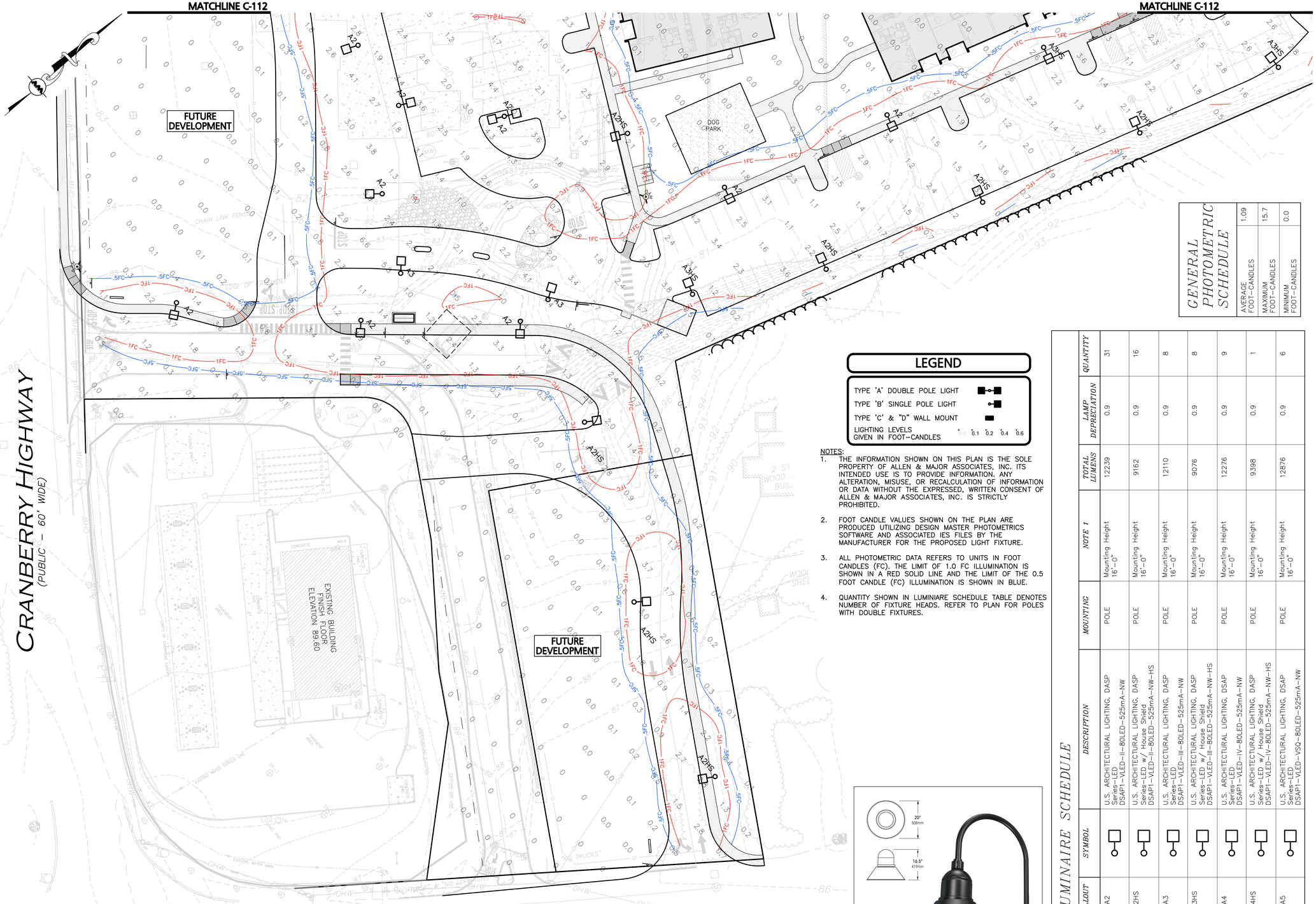

GENERAL PHOTOMETRIC SCHEDULE

AVERAGE FOOT-CANDLES	1.09
MAXIMUM FOOT-CANDLES	15.7
MINIMUM FOOT-CANDLES	0.0

LEGEND

- TYPE 'A' DOUBLE POLE LIGHT
- TYPE 'B' SINGLE POLE LIGHT
- TYPE 'C' & "D" WALL MOUNT
- LIGHTING LEVELS GIVEN IN FOOT-CANDLES (0.1 0.2 0.4 0.6)

NOTES:

1. THE INFORMATION SHOWN ON THIS PLAN IS THE SOLE PROPERTY OF ALLEN & MAJOR ASSOCIATES, INC. ITS INTENDED USE IS TO PROVIDE INFORMATION. ANY ALTERATION, MISUSE, OR RECALCULATION OF INFORMATION OR DATA WITHOUT THE EXPRESSED, WRITTEN CONSENT OF ALLEN & MAJOR ASSOCIATES, INC. IS STRICTLY PROHIBITED.
2. FOOT CANDLE VALUES SHOWN ON THE PLAN ARE PRODUCED UTILIZING DESIGN MASTER PHOTOMETRICS SOFTWARE AND ASSOCIATED IES FILES BY THE MANUFACTURER FOR THE PROPOSED LIGHT FIXTURE.
3. ALL PHOTOMETRIC DATA REFERS TO UNITS IN FOOT CANDLES (FC). THE LIMIT OF 1.0 FC ILLUMINATION IS SHOWN IN A RED SOLID LINE AND THE LIMIT OF THE 0.5 FOOT CANDLE (FC) ILLUMINATION IS SHOWN IN BLUE.
4. QUANTITY SHOWN IN LUMINIARE SCHEDULE TABLE DENOTES NUMBER OF FIXTURE HEADS. REFER TO PLAN FOR POLES WITH DOUBLE FIXTURES.

LUMINAIRE SCHEDULE

CALLOUT	SYMBOL	DESCRIPTION	MOUNTING	NOTE 1	LAMP DEPRECIATION	TOTAL LUMENS	QUANTITY
A2		U.S. ARCHITECTURAL LIGHTING, DASP Series-LED DSAP1-VLED-II-80LED-525mA-NW	POLE	Mounting Height 16'-0"	0.9	12239	31
A2HS		U.S. ARCHITECTURAL LIGHTING, DASP Series-LED w/ House Shield DSAP1-VLED-II-80LED-525mA-NW-HS	POLE	Mounting Height 16'-0"	0.9	9162	16
A3		U.S. ARCHITECTURAL LIGHTING, DASP Series-LED DSAP1-VLED-III-80LED-525mA-NW	POLE	Mounting Height 16'-0"	0.9	12110	8
A3HS		U.S. ARCHITECTURAL LIGHTING, DASP Series-LED w/ House Shield DSAP1-VLED-III-80LED-525mA-NW-HS	POLE	Mounting Height 16'-0"	0.9	9076	8
A4		U.S. ARCHITECTURAL LIGHTING, DSAP Series-LED DSAP1-VLED-IV-80LED-525mA-NW	POLE	Mounting Height 16'-0"	0.9	12276	9
A4HS		U.S. ARCHITECTURAL LIGHTING, DASP Series-LED w/ House Shield DSAP1-VLED-IV-80LED-525mA-NW-HS	POLE	Mounting Height 16'-0"	0.9	9398	1
A5		U.S. ARCHITECTURAL LIGHTING, DSAP Series-LED DSAP1-VLED-VSQ-80LED-525mA-NW	POLE	Mounting Height 16'-0"	0.9	12876	6

LIGHT FIXTURE
U.S. ARCHITECTURAL, DSAP1-LED

GRAPHIC SCALE

28 0 14 28 55 110

(IN FEET)
1 inch = 28 ft.

DIG SAFE
BEFORE YOU DIG
CALL 811 OR
1-888-DIG-SAFE
1-888-344-7233

M:\PROJECTS\2518-01\CIVIL\DRAWINGS\CURRENT\C-2518-01_LIGHTING.DWG

APPROVED BY
TOWN OF ROCHESTER PLANNING BOARD

DATE SUBMITTED: _____

DATE ENDORSED: _____

DATE APPROVED: _____

_____

_____

_____

_____

_____

_____

_____

TOWN OF ROCHESTER PLANNING BOARD

ISSUED FOR REVIEW
10-25-2019 REV. 6:12-01-2020

COMMONWEALTH OF MASSACHUSETTS
PHILIP L CORDEIRO
CIVIL
NO. 47083
REGISTERED PROFESSIONAL ENGINEER

Philip L Cordeiro
c=US, o=Allen and Major Associates Inc., ou=A01410C0000017579BB84FD00002012, cn=Philip L Cordeiro
2021.01.26 14:28:33 -05'00'

PROFESSIONAL ENGINEER FOR
ALLEN & MAJOR ASSOCIATES, INC.

REV	DATE	DESCRIPTION
6	12-01-2020	PER PLANNING BOARD PEER REVIEW COMMENTS
5	10-23-2020	PER PLANNING BOARD PEER REVIEW COMMENTS
4	10-02-2020	PER PLANNING BOARD PEER REVIEW COMMENTS
3	07-31-2020	PER PLANNING BOARD PEER REVIEW COMMENTS
2	07-09-2020	PER NOI PEER REVIEW COMMENTS
1	05-18-2020	PER NOI PEER REVIEW COMMENTS

APPLICANT\OWNER:
STEEN
REALTY AND DEVELOPMENT CORPORATION
3 LEDGEWOOD BOULEVARD DARTMOUTH, MA 02747

PROJECT:
ROCHESTER CROSSROADS
SMART GROWTH DEVELOPMENT
CRANBERRY HIGHWAY
ROCHESTER, MA

PROJECT NO.	2518-01	DATE:	10-25-2019
SCALE:	1" = 28'	DWG. NAME:	C2518-01_
DESIGNED BY:	PGM/CMcC	CHECKED BY:	PC

PREPARED BY:
ALLEN & MAJOR ASSOCIATES, INC.
civil engineering ◆ land surveying
environmental consulting ◆ landscape architecture
www.allenmajor.com
10 MAIN STREET
LAKEVILLE MA 02347
TEL: (508) 923-1010
FAX: (508) 923-6309
WOBURN, MA ◆ LAKEVILLE, MA ◆ MANCHESTER, NH

THIS DRAWING HAS BEEN PREPARED IN DIGITAL FORMAT. CLIENT/CLIENT'S REPRESENTATIVE OR CONSULTANTS MAY BE PROVIDED COPIES OF DRAWINGS AND SPECIFICATIONS FOR HIS/HER INFORMATION AND/OR SPECIFIC USE ON THIS PROJECT. DUE TO THE POTENTIAL THAT THE PROVIDED INFORMATION MAY BE MODIFIED UNINTENTIONALLY OR OTHERWISE, ALLEN & MAJOR ASSOCIATES, INC. MAY REMOVE ALL INDICATION OF THE DOCUMENT'S AUTHORSHIP ON THE DIGITAL MEDIA. PRINTED REPRESENTATIONS OR PORTABLE DOCUMENT FORMAT OF THE DRAWINGS AND SPECIFICATIONS ISSUED SHALL BE THE ONLY RECORD COPIES OF ALLEN & MAJOR ASSOCIATES, INC.'S WORK PRODUCT.

DRAWING TITLE:
PHOTOMETRICS PLAN

SHEET No.
C-114

Copyright©2020 Allen & Major Associates, Inc.
All Rights Reserved

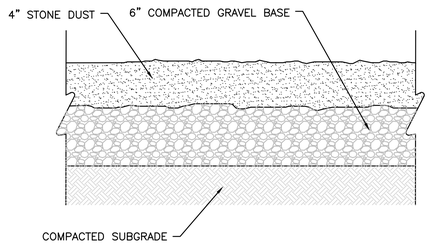

DOG PARK SURFACE (11)
NOT TO SCALE

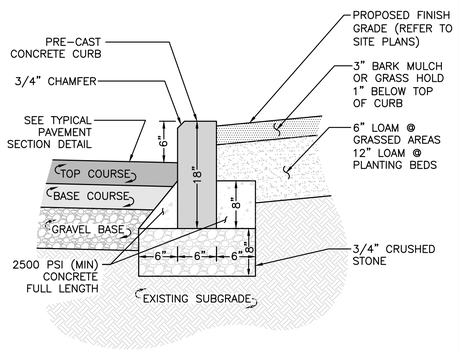

PRECAST CONCRETE CURB (10)
NOT TO SCALE

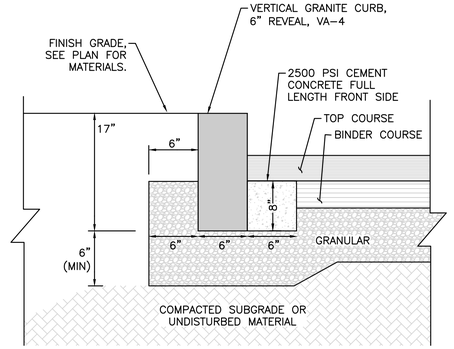

VERTICAL GRANITE CURB (9)
NOT TO SCALE

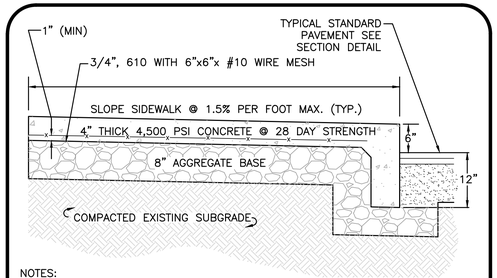

NOTES:
1. SIDEWALK TO HAVE TOOLED JOINTS IN A 5' x 5' (TYP.) GRID WITH EXPANSION JOINTS 15' ON CENTER AND PRE-MOLDED FILLER.
2. TOOLED JOINT 6" FROM FACE OF CURB.
3. SEE PLAN FOR ELEVATIONS AT CURB
4. SIDEWALK CROSS SLOPE TO BE 1.5% MAX & SIDEWALK LONGITUDINAL RUNNING SLOPE TO BE 4.5% MAX, TYP.
5. THE SURFACE SHALL BE FINISHED WITH A SOFT BRISTLED PUSH BROOM ACROSS THE ENTIRE SIDEWALK WIDTH, PERPENDICULAR TO THE DIRECTION OF PEDESTRIAN. "PICTURE FRAME" FINISHES SHOULD NOT BE PROVIDED.
6. CURB AS SHOWN IS MONOLITHIC. SEE ALTERNATIVE CURB DETAILS FOR VGC AND PCC.

MONOLITHIC CONCRETE CURB AT CONCETE SIDEWALK (8)
NOT TO SCALE

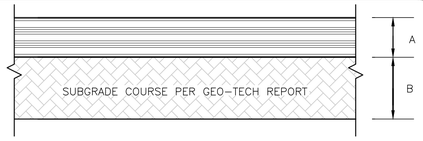

NOTES:
1. SURFACE COURSE, BASE, AND SUBGRADE SHALL BE PER GEOTECHNICAL ENGINEER'S RECOMMENDATIONS FOR LOCAL SOILS OR DRAINAGE CONDITIONS AND/OR METHODS.
2. SUBGRADE SHALL BE COMPACTED TO 95% OF MAXIMUM DRY DENSITY (AS DETERMINED BY ASTM D1557).
3. COORDINATE PAVEMENT DETAIL WITH GEOTECHNICAL ENGINEER.

STANDARD DUTY PAVING
A= 1.5" ASPHALT CONCRETE - SURFACE COURSE (M.3.11.0, TABLE A, TOP COURSE)
2.5" ASPHALT CONCRETE - BINDER COURSE (M.3.11.0, TABLE A, BINDER COURSE)

B= 12" SUBBASE COURSE (MASSDOT 1.03.0, TYPE B)

STANDARD DUTY BITUMINOUS PAVEMENT (7)
NOT TO SCALE

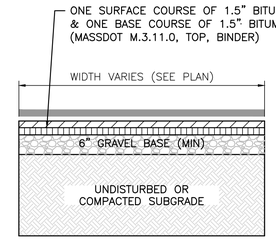

NOTES
1. SEE PLAN FOR ELEVATIONS.

BITUMINOUS WALKWAY (6)
NOT TO SCALE

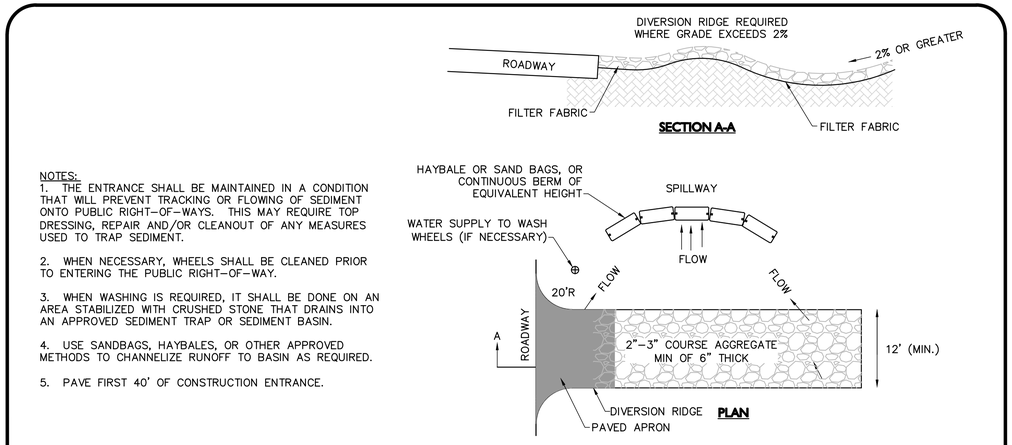

NOTES:
1. THE ENTRANCE SHALL BE MAINTAINED IN A CONDITION THAT WILL PREVENT TRACKING OR FLOWING OF SEDIMENT ONTO PUBLIC RIGHT-OF-WAYS. THIS MAY REQUIRE TOP DRESSING, REPAIR AND/OR CLEANOUT OF ANY MEASURES USED TO TRAP SEDIMENT.
2. WHEN NECESSARY, WHEELS SHALL BE CLEANED PRIOR TO ENTERING THE PUBLIC RIGHT-OF-WAY.
3. WHEN WASHING IS REQUIRED, IT SHALL BE DONE ON AN AREA STABILIZED WITH CRUSHED STONE THAT DRAINS INTO AN APPROVED SEDIMENT TRAP OR SEDIMENT BASIN.
4. USE SANDBAGS, HAYBALES, OR OTHER APPROVED METHODS TO CHANNELIZE RUNOFF TO BASIN AS REQUIRED.
5. PAVE FIRST 40' OF CONSTRUCTION ENTRANCE.

TEMPORARY CONSTRUCTION ENTRANCE/EXIT (5)
NOT TO SCALE

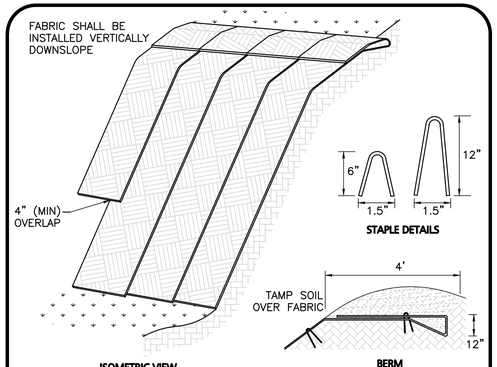

NOTE:
1. SLOPE SURFACE SHALL BE FREE OF ROCKS, CLODS, STICKS AND GRASS. FABRIC SHALL HAVE GOOD SOIL CONTACT.
2. APPLY PERMANENT SEEDING BEFORE PLACING FABRIC.
3. LAY BLANKETS LOOSELY AND STAKE OR STAPLE TO MAINTAIN DIRECT CONTACT WITH THE SOIL. DO NOT STRETCH.
4. CHOOSE MATERIAL BASED ON SLOPE, SOILS, AND APPLICATION.

EROSION CONTROL FABRIC (4)
NOT TO SCALE

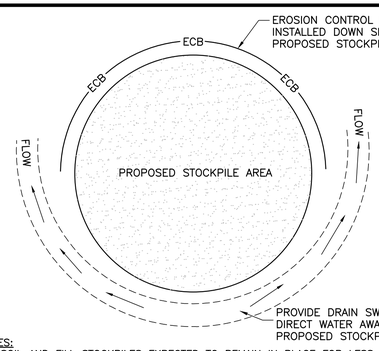

NOTES:
1. SOIL AND FILL STOCKPILES EXPECTED TO REMAIN IN PLACE FOR LESS THAN 90 DAYS SHALL BE COVERED WITH STRAW AND MULCH (AT 100LBS/1,000 SF), OR WITH AN ANCHORED TARP WITHIN 7 DAYS OR PRIOR TO ANY RAINFALL.
2. SOIL AND FILL STOCKPILES EXPECTED TO REMAIN IN PLACE FOR 90 DAYS OR MORE SHALL BE SEEDED WITH WINTER RYE (FOR FALL SEEDING AT 1LB/1,000 SF) OR OATS (FOR SUMMER SEEDING AT 2LB/1,000 SF) AND THEN COVERED WITH HAY MULCH (AT 100LB/1,000 SF) OR AN ANCHORED TARP WITHIN 7 DAYS OR PRIOR TO ANY RAINFALL.

STOCKPILE PROTECTION (3)
NOT TO SCALE

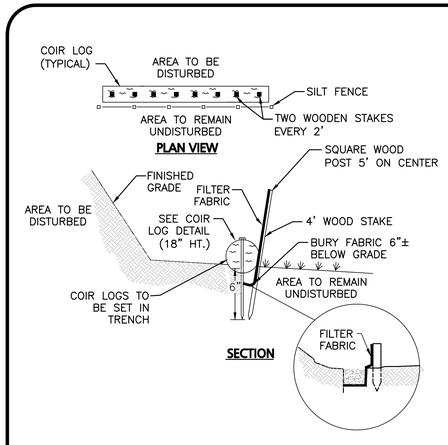

SILT FENCE AND COIR LOG (2)
NOT TO SCALE

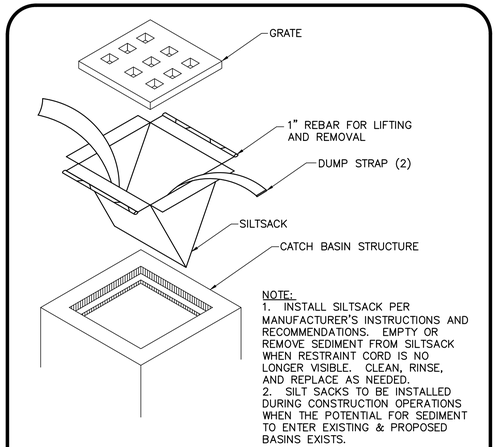

NOTE:
1. INSTALL SILTSACK PER MANUFACTURER'S INSTRUCTIONS AND RECOMMENDATIONS. EMPTY OR REMOVE SEDIMENT FROM SILTSACK WHEN RESTRAINT CORD IS NO LONGER VISIBLE. CLEAN, RINSE, AND REPLACE AS NEEDED.
2. SILT SACKS TO BE INSTALLED DURING CONSTRUCTION OPERATIONS WHEN THE POTENTIAL FOR SEDIMENT TO ENTER EXISTING & PROPOSED BASINS EXISTS.

SILTSACK INLET DETAIL (1)
NOT TO SCALE

M:\PROJECTS\2518-01\CIVIL\DRAWINGS\CURRENT\C-2518-01_DETAILS.DWG

APPROVED BY
TOWN OF ROCHESTER PLANNING BOARD

DATE SUBMITTED: _____

DATE ENDORSED: _____

DATE APPROVED: _____

_____

_____

_____

_____

_____

_____

_____

TOWN OF ROCHESTER PLANNING BOARD

ISSUED FOR REVIEW
10-25-2019 REV. 6:12-01-2020

COMMONWEALTH OF MASSACHUSETTS
PHILIP L CORDEIRO
CIVIL
NO. 47083
REGISTERED PROFESSIONAL ENGINEER

Philip L Cordeiro
c=US, o=Allen and Major Associates Inc., ou=A01410C000000175798BB4FD00002012, cn=Philip L Cordeiro
2021.01.26 14:28:59 -05'00'

PROFESSIONAL ENGINEER FOR
ALLEN & MAJOR ASSOCIATES, INC.

REV	DATE	DESCRIPTION
6	12-01-2020	PER PLANNING BOARD PEER REVIEW COMMENTS
5	10-23-2020	PER PLANNING BOARD PEER REVIEW COMMENTS
4	10-02-2020	PER PLANNING BOARD PEER REVIEW COMMENTS
3	07-31-2020	PER PLANNING BOARD PEER REVIEW COMMENTS
2	07-09-2020	PER NOI PEER REVIEW COMMENTS
1	05-18-2020	PER NOI PEER REVIEW COMMENTS

APPLICANT\OWNER:
STEEN
REALTY AND DEVELOPMENT CORPORATION
3 LEDGEWOOD BOULEVARD DARTMOUTH, MA 02747

PROJECT:
ROCHESTER CROSSROADS
SMART GROWTH DEVELOPMENT
CRANBERRY HIGHWAY
ROCHESTER, MA

PROJECT NO.	2518-01	DATE:	10-25-2019
SCALE:	AS SHOWN	DWG. NAME:	C2518-01_
DESIGNED BY:	PGM/CMcC	CHECKED BY:	PC

PREPARED BY:
ALLEN & MAJOR ASSOCIATES, INC.
civil engineering ◆ land surveying
environmental consulting ◆ landscape architecture
www.allenmajor.com
10 MAIN STREET
LAKEVILLE MA 02347
TEL: (508) 923-1010
FAX: (508) 923-6309
WOBURN, MA ◆ LAKEVILLE, MA ◆ MANCHESTER, NH

THIS DRAWING HAS BEEN PREPARED IN DIGITAL FORMAT. CLIENT/CLIENT'S REPRESENTATIVE OR CONSULTANTS MAY BE PROVIDED COPIES OF DRAWINGS AND SPECIFICATIONS FOR HIS/HER INFORMATION AND/OR SPECIFIC USE ON THIS PROJECT. DUE TO THE POTENTIAL THAT THE PROVIDED INFORMATION MAY BE MODIFIED UNINTENTIONALLY OR OTHERWISE, ALLEN & MAJOR ASSOCIATES, INC. MAY REMOVE ALL INDICATION OF THE DOCUMENT'S AUTHORSHIP ON THE DIGITAL MEDIA. PRINTED REPRESENTATIONS OR PORTABLE DOCUMENT FORMAT OF THE DRAWINGS AND SPECIFICATIONS ISSUED SHALL BE THE ONLY RECORD COPIES OF ALLEN & MAJOR ASSOCIATES, INC.'S WORK PRODUCT.

DRAWING TITLE:
DETAILS

SHEET No.
C-501

Copyright©2020 Allen & Major Associates, Inc.
All Rights Reserved

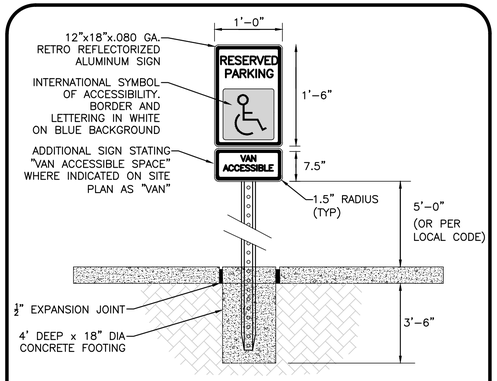

NOTES:
1. SPECIFIC CODE SHALL BE REFERENCED FOR LOCAL AND STATE REQUIREMENTS.
2. PROVIDE (1) SIGN PER ADA SPACE. SEE SITE PLAN FOR EXACT LOCATION.
3. EXPANSION JOINT MATERIAL NOT REQUIRED WITH FLEXIBLE PAVEMENT.
4. ALL SIGNAGE TO COMPLY WITH MUTCD STANDARDS.

ADA ACCESSIBLE PARKING SIGN — NOT TO SCALE — 11

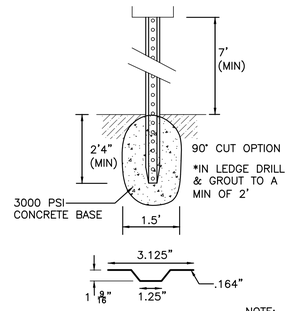

STANDARD SIGN POST — NOT TO SCALE

NOTE:
1. HEAVY DUTY GUAGE

LENGTH: AS REQUIRED
WEIGHT PER LF: 2.50 LBS (MIN)
HOLES: 3/8" DIAMETER, 1" C-C FULL LENGTH
STEEL: SHALL CONFORM TO ASTM A-499 OR ASTM A-576
FINISH: SHALL BE PAINTED WITH 2 COATS OF AN APPROVED MEDIUM GREEN, BAKED ON OR AIR DRIED, PAINT OF WEATHER RESISTANT QUALITY.

SIGN POST DETAIL — NOT TO SCALE — 10

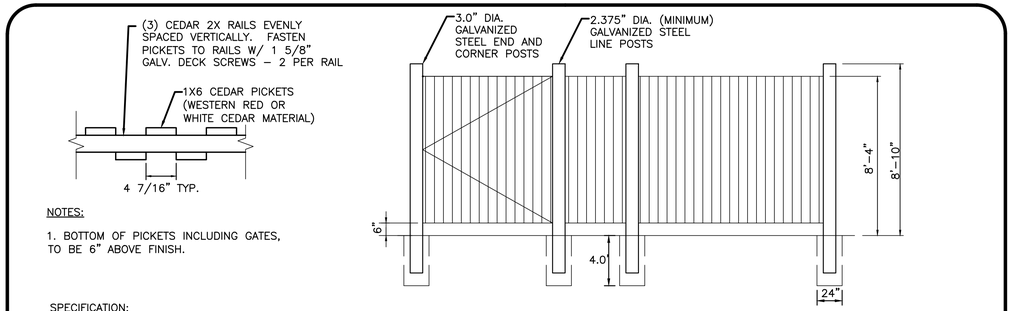

NOTES:

1. BOTTOM OF PICKETS INCLUDING GATES, TO BE 6" ABOVE FINISH.

SPECIFICATION:

1. CEDAR FENCE: WESTERN RED CEDAR OR WHITE CEDAR WITH BAND SAWN TEXTURED SURFACE.
2. POSTS: GALVANIZED STEEL POSTS, CONCEALED ON THE SHOW SIDE (FACING NEIGHBORS) BY A WOOD BOARD/PICKET. PROVIDE ASTM A-90 ZINC COATING, TYPE I. LINE POSTS SHALL BE MIN. 2.375" (NOM. O.D.). CORNER AND TERMINAL POSTS SHALL BE MIN. 6.0" (NOM. O.D.).
3. RAILS: GRADE: STANDARD OR BETTER PER NLGA 122B, C, WCLIB 122B, C AND WWPA 40.11.
4. BOARDS: GRADE: CUSTOM KNOTTY PER WRCLA.
5. SEALER: OLYMPIC MAXIMUM CLEAR WATERPROOFING SEALANT OR APPROVED EQUAL.

SHADOW BOX FENCE AT DUMPSTER AREA — NOT TO SCALE — 9

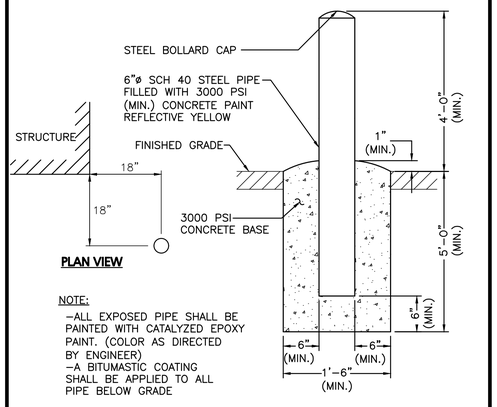

PLAN VIEW

NOTE:
-ALL EXPOSED PIPE SHALL BE PAINTED WITH CATALYZED EPOXY PAINT. (COLOR AS DIRECTED BY ENGINEER)
-A BITUMASTIC COATING SHALL BE APPLIED TO ALL PIPE BELOW GRADE

FIXED BOLLARD — NOT TO SCALE — 8

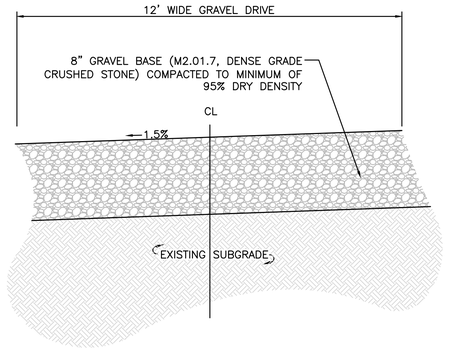

GRAVEL BASIN ACCESS DRIVE — NOT TO SCALE — 7

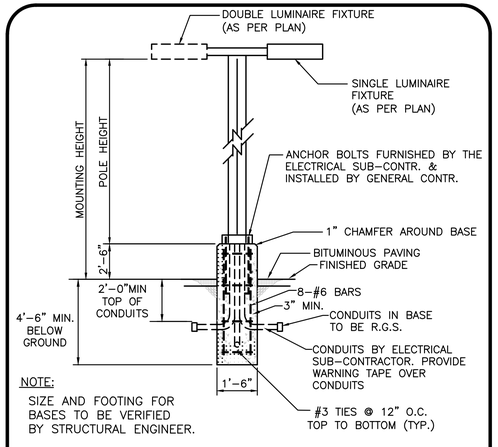

NOTE:
SIZE AND FOOTING FOR BASES TO BE VERIFIED BY STRUCTURAL ENGINEER.

RAISED LIGHT POLE BASE — NOT TO SCALE — 6

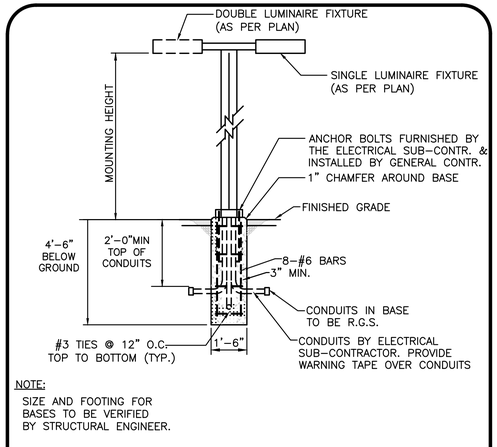

NOTE:
SIZE AND FOOTING FOR BASES TO BE VERIFIED BY STRUCTURAL ENGINEER.

FLUSH LIGHT POLE BASE — NOT TO SCALE — 5

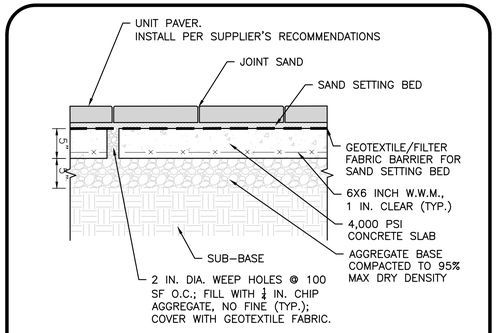

NOTES:
1. PAVER COLOR TO BE SELECTED BY OWNER AND ARCHITECT. PROVIDE SAMPLES AND SHOP DRAWINGS OF PAVERS TO OWNER FOR APPROVAL PRIOR TO ORDER.
2. SWEEP & REFILL RG+ POLYMERIC SAND, (COLOR TO BE APPROVED BY OWNER) AS AVAILABLE FROM TECHNISEAL, (1-800-465-7325) INTO HAND TIGHT JOINTS. REPEAT AS NECESSARY TO FILL. INSTALL PER MANUFACTURER'S RECOMMENDATIONS.
3. PROTECT GRANITE PAVER SURFACE WITH URETHANE SCUFF PAD DURING COMPACTION.

UNIT PAVERS — NOT TO SCALE — 4

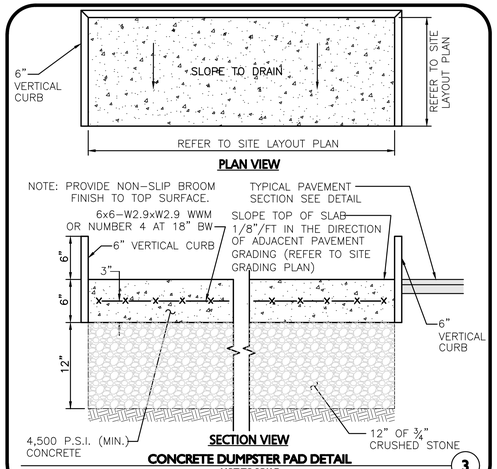

CONCRETE DUMPSTER PAD DETAIL — NOT TO SCALE — 3

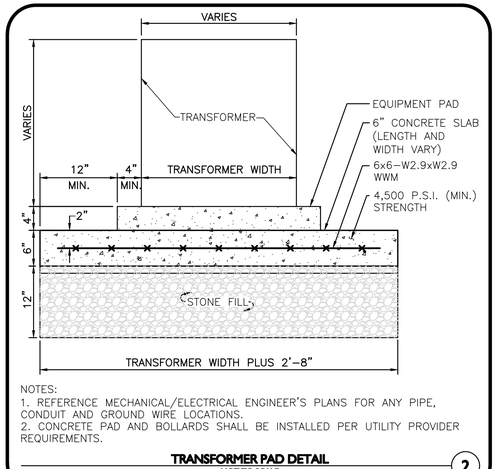

NOTES:
1. REFERENCE MECHANICAL/ELECTRICAL ENGINEER'S PLANS FOR ANY PIPE, CONDUIT AND GROUND WIRE LOCATIONS.
2. CONCRETE PAD AND BOLLARDS SHALL BE INSTALLED PER UTILITY PROVIDER REQUIREMENTS.

TRANSFORMER PAD DETAIL — NOT TO SCALE — 2

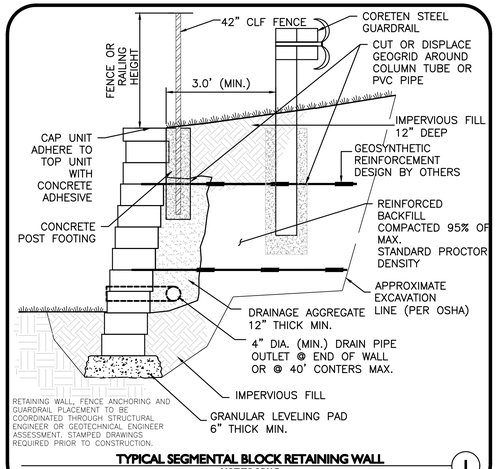

RETAINING WALL, FENCE ANCHORING AND GUARDRAIL PLACEMENT TO BE COORDINATED THROUGH STRUCTURAL ENGINEER OR GEOTECHNICAL ENGINEER ASSESSMENT. STAMPED DRAWINGS REQUIRED PRIOR TO CONSTRUCTION.

TYPICAL SEGMENTAL BLOCK RETAINING WALL — NOT TO SCALE — 1

APPROVED BY
TOWN OF ROCHESTER PLANNING BOARD

DATE SUBMITTED: _____

DATE ENDORSED: _____

DATE APPROVED: _____

_____

_____

_____

_____

_____

_____

_____

TOWN OF ROCHESTER PLANNING BOARD

ISSUED FOR REVIEW
10-25-2019 REV. 6:12-01-2020

COMMONWEALTH OF MASSACHUSETTS
PHILIP L CORDEIRO
CIVIL
NO. 47083
REGISTERED PROFESSIONAL ENGINEER

Philip L Cordeiro
c=US, o=Allen and Major Associates Inc., ou=A01410C000001757988B4FD00002012, cn=Philip L Cordeiro
2021.01.26 14:29:34 -05'00'

PROFESSIONAL ENGINEER FOR
ALLEN & MAJOR ASSOCIATES, INC.

REV	DATE	DESCRIPTION
6	12-01-2020	PER PLANNING BOARD PEER REVIEW COMMENTS
5	10-23-2020	PER PLANNING BOARD PEER REVIEW COMMENTS
4	10-02-2020	PER PLANNING BOARD PEER REVIEW COMMENTS
3	07-31-2020	PER PLANNING BOARD PEER REVIEW COMMENTS
2	07-09-2020	PER NOI PEER REVIEW COMMENTS
1	05-18-2020	PER NOI PEER REVIEW COMMENTS

APPLICANT\OWNER:
STEEN
REALTY AND DEVELOPMENT CORPORATION
3 LEDGEWOOD BOULEVARD DARTMOUTH, MA 02747

PROJECT:
ROCHESTER CROSSROADS
SMART GROWTH DEVELOPMENT
CRANBERRY HIGHWAY
ROCHESTER, MA

PROJECT NO.	2518-01	DATE:	10-25-2019
SCALE:	AS SHOWN	DWG. NAME:	C2518-01_
DESIGNED BY:	PGM/CMcC	CHECKED BY:	PC

PREPARED BY:
ALLEN & MAJOR ASSOCIATES, INC.
civil engineering ◆ land surveying
environmental consulting ◆ landscape architecture
www.allenmajor.com
10 MAIN STREET
LAKEVILLE MA 02347
TEL: (508) 923-1010
FAX: (508) 923-6309
WOBURN, MA ◆ LAKEVILLE, MA ◆ MANCHESTER, NH

THIS DRAWING HAS BEEN PREPARED IN DIGITAL FORMAT. CLIENT/CLIENT'S REPRESENTATIVE OR CONSULTANTS MAY BE PROVIDED COPIES OF DRAWINGS AND SPECIFICATIONS FOR HIS/HER INFORMATION AND/OR SPECIFIC USE ON THIS PROJECT. DUE TO THE POTENTIAL THAT THE PROVIDED INFORMATION MAY BE MODIFIED UNINTENTIONALLY OR OTHERWISE, ALLEN & MAJOR ASSOCIATES, INC. MAY REMOVE ALL INDICATION OF THE DOCUMENTS AUTHORSHIP ON THE DIGITAL MEDIA. PRINTED REPRESENTATIONS OR PORTABLE DOCUMENT FORMAT OF THE DRAWINGS AND SPECIFICATIONS ISSUED SHALL BE THE ONLY RECORD COPIES OF ALLEN & MAJOR ASSOCIATES, INC.'S WORK PRODUCT.

DRAWING TITLE: DETAILS

SHEET No. C-502

Copyright©2020 Allen & Major Associates, Inc. All Rights Reserved

M:\PROJECTS\2518-01\CIVIL\DRAWINGS\CURRENT\C-2518-01_DETAILS.DWG

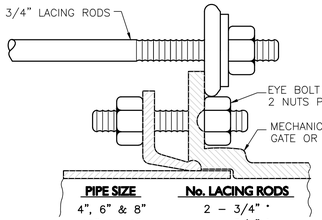

PIPE SIZE	No. LACING RODS
4", 6" & 8"	2 – 3/4" *
10" & 12"	4 – 3/4" *
16"	4 – 3/4" *
20"	6 – 3/4" *

* STANDARD LENGTHS ARE 6' & 10'. COUPLINGS MAY BE USED FOR LONGER LENGTHS.

NOTES:

1. NUMBER OF LACING RODS IS BASED ON MAXIMUM PRESSURE OF 125 P.S.I. IN MAIN.
2. EYE–BOLTS AND LACING RODS ARE TO BE FABRICATED FROM A–36 STEEL.
3. STEEL LACING RODS SHALL HAVE A YIELD STRESS OF NOT LESS THAN 36,000 P.S.I.
4. EYE–BOLTS SHALL HAVE A MINIMUM TENSILE STRENGTH OF 7,000 LBS. EACH.

MECHANICAL JOINT LACING DETAIL — NOT TO SCALE — 10

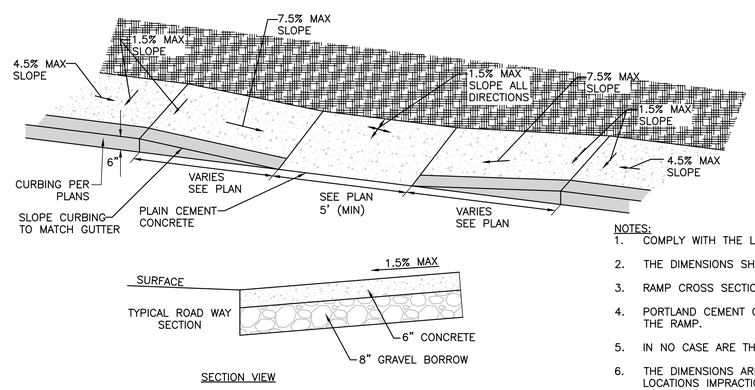

SECTION VIEW

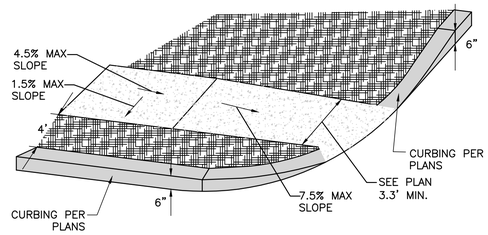

NOTES:

1. COMPLY WITH THE LATEST ADA AND MASS DOT CONSTRUCTION STANDARD DRAWINGS E107.1.0 TO E107.6.9 AND E107.9.0
2. THE DIMENSIONS SHOWN AT ROADWAY EDGE ARE FIXED DISTANCES.
3. RAMP CROSS SECTION TO BE THE SAME AS ADJACENT SIDEWALK; I.E. DEPTH OF SURFACE AND FOUNDATION.
4. PORTLAND CEMENT CONCRETE RAMPS ARE TO BE TEXTURED BY BROOMING IN A DIRECTION PARALLEL TO THE LENGTH OF THE RAMP.
5. IN NO CASE ARE THE RAMPS TO BE PLACED BEHIND THE STOP LINE.
6. THE DIMENSIONS ARE SUBJECT TO CHANGE IN THE FIELD IF EXISTING APPURTENANCES OR CONDITIONS WILL MAKE THE RAMP LOCATIONS IMPRACTICAL OR UNSAFE. CONSULT CIVIL ENGINEER PRIOR TO MAKING ANY MODIFICATIONS.

ACCESSIBLE RAMP & CURB TRANSITION — NOT TO SCALE — 9

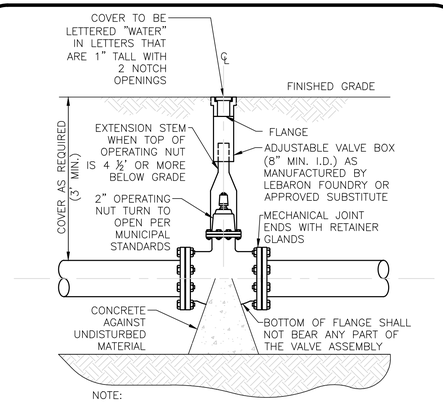

NOTE:
1.) CONTRACTOR MAY USE ANCHOR TEES AT HIS OPTION.
2.) HYDRANTS AND VALVES TO OPERATE PER MUNICIPAL STANDARDS

GATE VALVE — NOT TO SCALE — 8

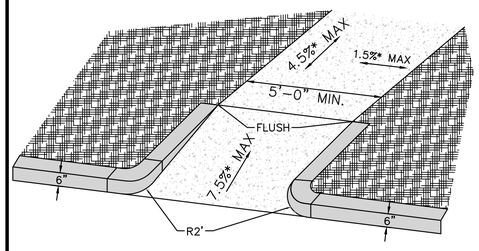

NOTES:

1. * = TOLERANCE FOR CONSTRUCTION ±0.5%

ADA RAMP (A) — NOT TO SCALE — 7

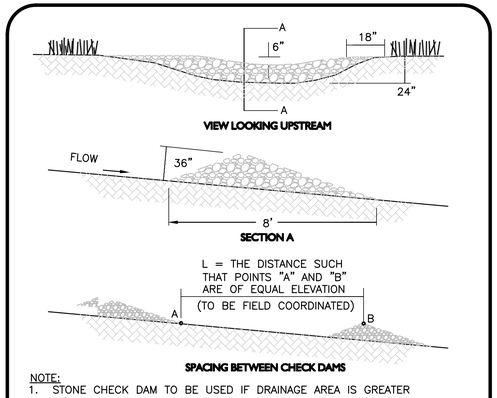

SPACING BETWEEN CHECK DAMS

NOTE:
1. STONE CHECK DAM TO BE USED IF DRAINAGE AREA IS GREATER THAN ¼ ACRE. (TO BE FIELD COORDINATED)
2. KEY STONE INTO CHANNEL BANKS AND EXTEND IT BEYOND THE ABUTMENTS A MINIMUM OF 18" TO PREVENT FLOW AROUND THE DAM.

STONE CHECK DAM PLACED IN SWALE — NOT TO SCALE — 6

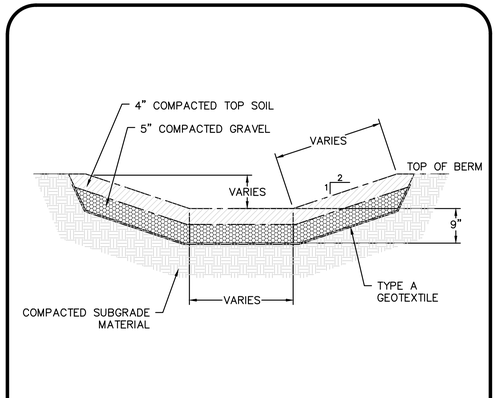

TYPICAL GRASS SWALE — NOT TO SCALE — 5

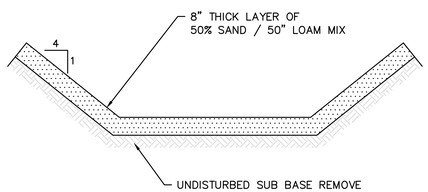

TYPICAL INFILTRATION BASIN CROSS SECTION — NOT TO SCALE — 4

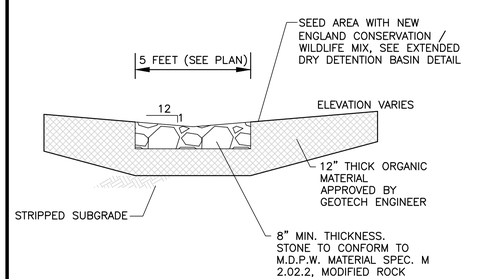

BASIN MODIFIED ROCK FILL RIPRAP CHANNEL — NOT TO SCALE — 3

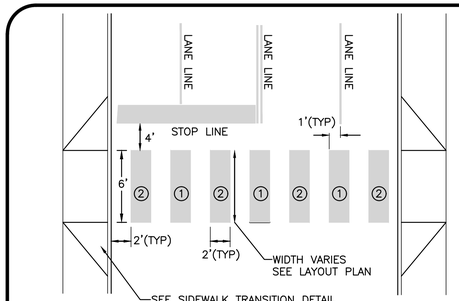

NOTE:
1. LANE LINE STRIP: THIS IS LOCATED IN THE LINE WITH EACH LANE LINE AND HALF THE STRIP ON EACH SIDE.
2. MID LINE STRIP: THIS IS LOCATED MIDWAY BETWEEN EACH LANE LINE STRIP.
3. TO BE HIGH VISIBILITY & RETRO REFLECTIVE EPOXY MATERIAL.
4. TO BE PAINTED YELLOW.
5. CROSSWALKS AT MAJOR INTERSECTIONS TO BE 10' WIDE.
6. ALL STRIPING SHALL COMPLY WITH MUTCD STANDARDS.

CROSSWALK STRIPING — NOT TO SCALE — 2

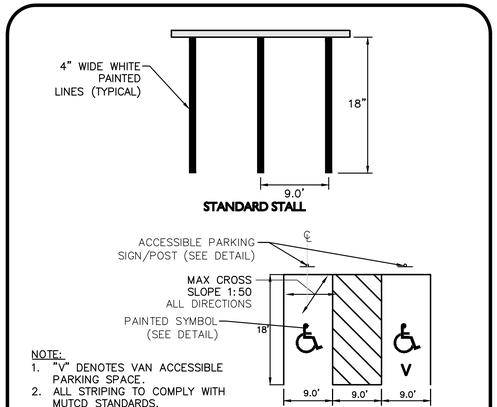

NOTE:
1. "V" DENOTES VAN ACCESSIBLE PARKING SPACE.
2. ALL STRIPING TO COMPLY WITH MUTCD STANDARDS.

ADA STANDARD AND VAN ACCESSIBLE PARKING SPACE

ADA AND STANDARD PARKING STRIPING — NOT TO SCALE — 1

M:\PROJECTS\2518–01\CIVIL\DRAWINGS\CURRENT\C–2518–01_DETAILS.DWG

APPROVED BY
TOWN OF ROCHESTER PLANNING BOARD

DATE SUBMITTED: _____

DATE ENDORSED: _____

DATE APPROVED: _____

_____

_____

_____

_____

_____

_____

_____

TOWN OF ROCHESTER PLANNING BOARD

ISSUED FOR REVIEW
10-25-2019 REV. 6:12-01-2020

COMMONWEALTH OF MASSACHUSETTS — PHILIP L CORDEIRO CIVIL NO. 47083 REGISTERED PROFESSIONAL ENGINEER

Philip L Cordeiro
c=US, o=Allen and Major Associates Inc., ou=A01410C0000175798BB4FD00002012, cn=Philip L Cordeiro
2021.01.26 14:30:01 -05'00'

PROFESSIONAL ENGINEER FOR
ALLEN & MAJOR ASSOCIATES, INC.

REV	DATE	DESCRIPTION
6	12-01-2020	PER PLANNING BOARD PEER REVIEW COMMENTS
5	10-23-2020	PER PLANNING BOARD PEER REVIEW COMMENTS
4	10-02-2020	PER PLANNING BOARD PEER REVIEW COMMENTS
3	07-31-2020	PER PLANNING BOARD PEER REVIEW COMMENTS
2	07-09-2020	PER NOI PEER REVIEW COMMENTS
1	05-18-2020	PER NOI PEER REVIEW COMMENTS

APPLICANT\OWNER:
STEEN REALTY AND DEVELOPMENT CORPORATION
3 LEDGEWOOD BOULEVARD DARTMOUTH, MA 02747

PROJECT:
ROCHESTER CROSSROADS
SMART GROWTH DEVELOPMENT
CRANBERRY HIGHWAY
ROCHESTER, MA

PROJECT NO.	2518-01	DATE:	10-25-2019
SCALE:	AS SHOWN	DWG. NAME:	C2518-01_
DESIGNED BY:	PGM/CMcC	CHECKED BY:	PC

PREPARED BY:
ALLEN & MAJOR ASSOCIATES, INC.
civil engineering ◆ land surveying
environmental consulting ◆ landscape architecture
www.allenmajor.com
10 MAIN STREET
LAKEVILLE MA 02347
TEL: (508) 923-1010
FAX: (508) 923-6309
WOBURN, MA ◆ LAKEVILLE, MA ◆ MANCHESTER, NH

THIS DRAWING HAS BEEN PREPARED IN DIGITAL FORMAT. CLIENT/CLIENT'S REPRESENTATIVE OR CONSULTANTS MAY BE PROVIDED COPIES OF DRAWINGS AND SPECIFICATIONS FOR HIS/HER INFORMATION AND/OR SPECIFIC USE ON THIS PROJECT. DUE TO THE POTENTIAL THAT THE PROVIDED INFORMATION MAY BE MODIFIED UNINTENTIONALLY OR OTHERWISE, ALLEN & MAJOR ASSOCIATES, INC. MAY REMOVE ALL INDICATION OF THE DOCUMENTS AUTHORSHIP ON THE DIGITAL MEDIA. PRINTED REPRESENTATIONS OR PORTABLE DOCUMENT FORMAT OF THE DRAWINGS AND SPECIFICATIONS ISSUED SHALL BE THE ONLY RECORD COPIES OF ALLEN & MAJOR ASSOCIATES, INC.'S WORK PRODUCT.

DRAWING TITLE: DETAILS

SHEET No. C-503

Copyright©2020 Allen & Major Associates, Inc.
All Rights Reserved

NOTES:

WHENEVER CONDITIONS PREVENT A LATERAL SEPARATION OF 10 FEET BETWEEN A SEWER MAIN AND A WATER/DRAIN MAIN:

1. THE WATER/DRAIN MAIN SHALL BE LAID IN A SEPARATE TRENCH AND THE DIFFERENCE IN ELEVATION BETWEEN THE WATER/DRAIN MAIN AND THE SEWER MAIN SHALL BE AT LEAST 18 INCHES.
2. THE PIPE CROSSING SHALL OCCUR AS CLOSE TO 90° AS PRACTICABLE.
3. THE PIPE JOINTS SHALL BE STAGGERED TO PROVIDE THE MAXIMUM SEPARATION FROM THE POINT OF CROSSING.
4. THE CROSSING SHALL BE ENCASED IN CONCRETE FOR THE ENTIRE WIDTH OF THE TRENCH AND FOR A DISTANCE OF 10 LINEAR FEET CENTERED ON THE CROSSING.
5. UTILITIES A AND B CAN BE EITHER NEW OR EXISTING.
6. WHEN ONE UTILITY IS A SANITARY SEWER. IT IS PREFERABLE TO BE POSITIONED AS SHOWN FOR UTILITY B.
7. ENCASEMENT EXTENDS 10'–0" ON EACH SIDE OF THE CENTERLINE OF UTILITY A.
8. PIPE MUST BE BRACED VERTICALLY AND HORIZONTALLY TO PREVENT FLOATATION DURING PLACEMENT OF CONCRETE.

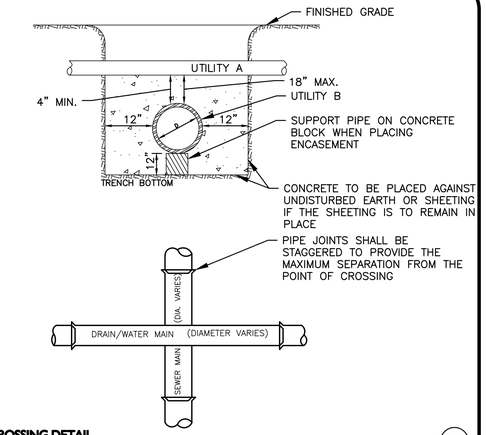

SEWER, WATER/DRAIN CROSSING DETAIL
NOT TO SCALE — 9

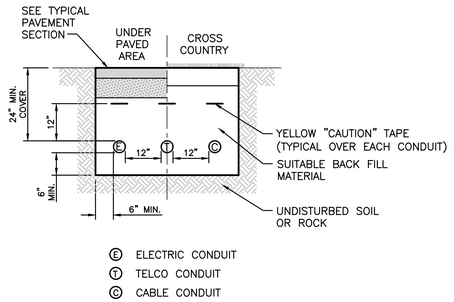

(E) ELECTRIC CONDUIT
(T) TELCO CONDUIT
(C) CABLE CONDUIT

NOTES:

1. SCHEDULE 80 PVC CONDUIT REQUIRED UNDER ROAD AND DRIVEWAY SURFACES.
2. ALL UTILITY INSTALLATION REQUIREMENTS, SEPARATIONS, AND CONDUIT SIZES TO BE VERIFIED WITH EACH UTILITY COMPANY PRIOR TO INSTALLATION OF ANY UNDERGROUND UTILITY CONDUIT.
3. SEE SITE ELECTRICAL PLAN FOR SPECIFIC DETAILS

BURIED CONDUIT DETAIL
NOT TO SCALE — 8

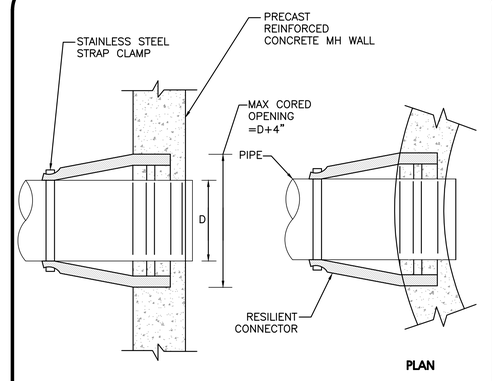

WATERTIGHT RESILIENT CONNECTION TO SEWER MANHOLES
NOT TO SCALE — 7

MANHOLES SHALL HAVE A BRICK PAVED SHELF AND INVERT, CONSTRUCTED TO CONFORM TO THE SIZE OF PIPE AND FLOW. AT CHANGES IN DIRECTION, THE INVERTS SHALL BE LAID OUT IN CURVES OF THE LONGEST RADIUS POSSIBLE TANGENT TO THE CENTER LINE OF THE HIGHEST PIPE CROWN AND SLOPE TO DRAIN TOWARD THE FLOW THROUGH CHANNEL.

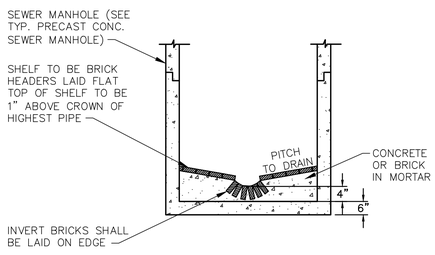

NOTE:
INVERT & SHELF TO BE PLACED AFTER LEAKAGE TEST

TYPICAL BRICK INVERT SECTION FOR SEWER MANHOLES
NOT TO SCALE — 6

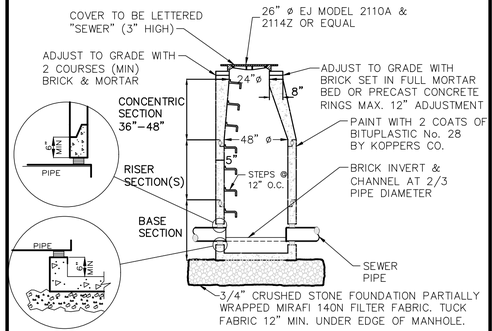

NOTES:

1. ALL INSIDE DROPS (IF NEEDED) REQUIRE A 5' DIAMETER

PRECAST CONCRETE SEWER MANHOLE
NOT TO SCALE — 5

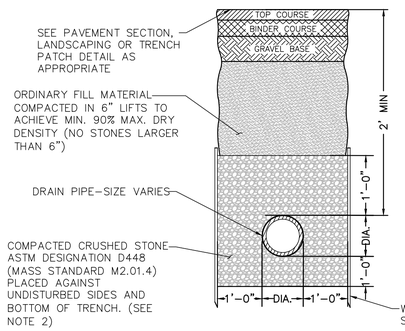

NOTES:

1. SHEETING, WHEN REQUIRED, TO BE CUT OFF AT LEAST 5' BELOW STREET AND A MINIMUM OF 1' ABOVE TOP OF PIPE. WOOD SHEETING DRIVEN BELOW MID–DIAMETER OF THE PIPE SHALL BE LEFT IN PLACE. STEEL SHEETING DRIVEN BELOW MID–DIAMETER MAY BE WITHDRAWN IF APPROVED IN WRITING BY THE ENGINEER. FOR PVC PIPE ALL SHEETING DRIVEN BELOW MID–DIAMETER SHALL BE LEFT IN PLACE.
2. WHEN APPROVED BY THE ENGINEER FOR PIPES OTHER THAN PVC, SELECTED GRAVEL FILL MATERIAL MAY BE USED FROM MID–DIAMETER OF PIPE TO 12" ABOVE TOP OF PIPE. NO STONES LARGER THAN 2" IN ANY DIMENSION WILL BE PERMITTED IN THIS AREA – MASSDOT MATERIAL STANDARD M1.03.0 TYPE C.
3. PROVIDE AT LEAST ONE IMPERVIOUS DAM IN GRAVEL BEDDING BETWEEN EACH MANHOLE WHERE DIRECTED, OR EVERY 300 FT, WHICHEVER IS LESS.
4. BEDDING MATERIAL FOR PVC PIPE SHALL MEET THE REQUIREMENTS OF ASTM D2321 CLASS I OR CLASS II EMBEDMENT MATERIALS.

DRAINAGE TRENCH
NOT TO SCALE — 4

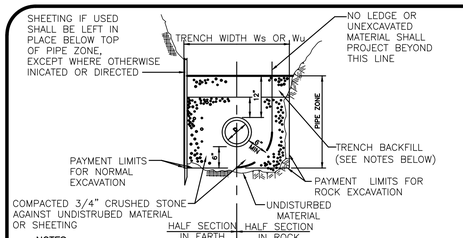

NOTES:

1. TRENCH BACKFILL TO BE USED WITHIN THE RIGHT–OF–WAY SHALL CONSIST OF EITHER GRAVEL BORROW MEETING MHD SPECIFICATION M1.03.0, TYPE "B" OR PROCESSED GRAVEL BORROW FOR SUBBASE MEETING MHD SPECIFICATION M1.03.1.
2. WHEE THE REMOVAL OF 100 SQUARE FEET OR LESS OF ASPHALT IS REQUIRED WITHIN THE RIGHT OF WAY, THEN THE TRENCH BACKFILL MATERIAL SHALL CONSIST OF CONTROLLED DENSITY FILL MEETING MHD SPECIFICATION M4.08.0, TYPE "1E" OR "2E".
3. TRENCH BACKFILL MATERIAL TO BE USED OF THE RIGHT–OF–WAY MAY CONSIST OF MATERIAL GENERATED DURING EXCAVATIONS PROVIDED ALL STONES GREATER THAN 4" ARE REMOVED PRIOR TO PLACEMENT AND COMPACTION
4. GRANULAR TRENCH BACKFILL MATERIAL USED WITHIN THE RIGHT–OF–WAY SHALL BE PLACED IN MAXIMUM 6" LIFTS AND MECHANICALLYCOMPACTED TO A MINIMUM OF 95% OF THE MATERIAL'S MAXIMUM DRY DENSITY AND TO 90% ELSEWHERE AS DETERMINED BY ASTM D 1557.

SEWER TRENCH
NOT TO SCALE — 3

RIPRAP SIZING CHART

FES#	D	Q100	La	Wu	Wd	Th	D50
3	1.5	3.73	14.2'	4.5'	15.7'	2.0'	4"
17B	2.5	24.5	28.7'	7.5'	31.2'	2.0'	13.5"
18B	2.5	31.41	31.8'	7.5'	34.3'	3.0'	18.5"
24A	1.5	8.52	18.8'	4.5'	20.3'	2.0'	6"

RIP RAP SHALL EXTEND FROM THE FES TO THE BOTTOM OF THE PROPOSED AREA OR FURTHER AS SHOWN ON THE GRADING & DRAINAGE PLAN.

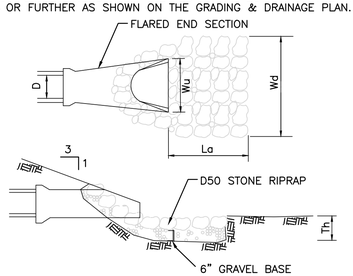

FLARED END SECTION WITH RIP RAP DISSIPATER
NOT TO SCALE — 2

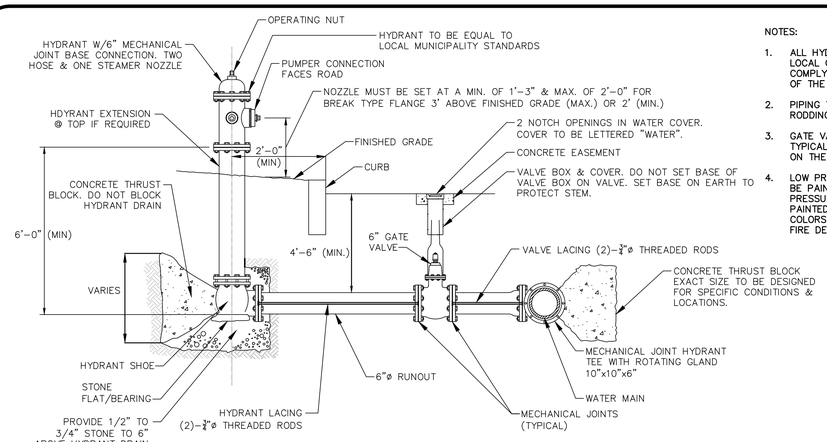

NOTES:

1. ALL HYDRANTS, VALVES AND LOCAL CONNECTIONS SHALL COMPLY WITH THE SPECIFICATIONS OF THE LOCAL MUNICIPALITY.
2. PIPING TO BE RESTRAINED WITH RODDING OR RETAINING GLANDS.
3. GATE VALVE INSTALLATION IS TYPICAL FOR ALL GATES SHOWN ON THE DRAWINGS.
4. LOW PRESSURE FIRE HYDRANT TO BE PAINTED YELLOW AND HIGH PRESSURE FIRE HYDRANT TO BE PAINTED RED UNLESS SPECIFIC COLORS SPECIFIED BY ROCHESTER FIRE DEPARTMENT.

FIRE HYDRANT CONNECTION
NOT TO SCALE — 1

M:\PROJECTS\2518–01\CIVIL\DRAWINGS\CURRENT\C–2518–01_DETAILS.DWG

APPROVED BY
TOWN OF ROCHESTER PLANNING BOARD

DATE SUBMITTED: _____

DATE ENDORSED: _____

DATE APPROVED: _____

_____

_____

_____

_____

_____

_____

TOWN OF ROCHESTER PLANNING BOARD

ISSUED FOR REVIEW
10-25-2019 REV. 6:12-01-2020

COMMONWEALTH OF MASSACHUSETTS
PHILIP L CORDEIRO
CIVIL
NO. 47083
REGISTERED PROFESSIONAL ENGINEER

Philip L Cordeiro
c=US, o=Allen and Major Associates Inc., ou=A01410C000001759B8B4FD00002012, cn=Philip L Cordeiro
2021.01.26 14:30:33 -05'00'

PROFESSIONAL ENGINEER FOR
ALLEN & MAJOR ASSOCIATES, INC.

REV	DATE	DESCRIPTION
6	12-01-2020	PER PLANNING BOARD PEER REVIEW COMMENTS
5	10-23-2020	PER PLANNING BOARD PEER REVIEW COMMENTS
4	10-02-2020	PER PLANNING BOARD PEER REVIEW COMMENTS
3	07-31-2020	PER PLANNING BOARD PEER REVIEW COMMENTS
2	07-09-2020	PER NOI PEER REVIEW COMMENTS
1	05-18-2020	PER NOI PEER REVIEW COMMENTS

APPLICANT\OWNER:

STEEN
REALTY AND DEVELOPMENT CORPORATION
3 LEDGEWOOD BOULEVARD DARTMOUTH, MA 02747

PROJECT:

ROCHESTER CROSSROADS
SMART GROWTH DEVELOPMENT
CRANBERRY HIGHWAY
ROCHESTER, MA

PROJECT NO.	2518-01	DATE:	10-25-2019
SCALE:	AS SHOWN	DWG. NAME:	C2518-01_
DESIGNED BY:	PGM/CMcC	CHECKED BY:	PC

PREPARED BY:

ALLEN & MAJOR ASSOCIATES, INC.
civil engineering ◆ land surveying
environmental consulting ◆ landscape architecture
www.allenmajor.com
10 MAIN STREET
LAKEVILLE MA 02347
TEL: (508) 923-1010
FAX: (508) 923-6309
WOBURN, MA ◆ LAKEVILLE, MA ◆ MANCHESTER, NH

THIS DRAWING HAS BEEN PREPARED IN DIGITAL FORMAT. CLIENT/CLIENT'S REPRESENTATIVE OR CONSULTANTS MAY BE PROVIDED COPIES OF DRAWINGS AND SPECIFICATIONS FOR HIS/HER INFORMATION AND/OR SPECIFIC USE ON THIS PROJECT. DUE TO THE POTENTIAL THAT THE PROVIDED INFORMATION MAY BE MODIFIED UNINTENTIONALLY OR OTHERWISE, ALLEN & MAJOR ASSOCIATES, INC. MAY REMOVE ALL INDICATION OF THE DOCUMENT'S AUTHORSHIP ON THE DIGITAL MEDIA. PRINTED REPRESENTATIONS OR PORTABLE DOCUMENT FORMAT OF THE DRAWINGS AND SPECIFICATIONS ISSUED SHALL BE THE ONLY RECORD COPIES OF ALLEN & MAJOR ASSOCIATES, INC.'S WORK PRODUCT.

DRAWING TITLE: DETAILS

SHEET No. C-504

Copyright©2020 Allen & Major Associates, Inc.
All Rights Reserved

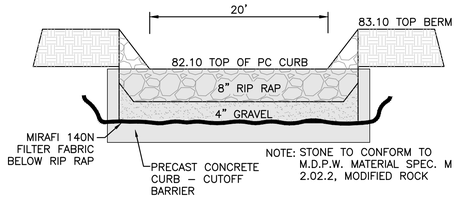

NOTE:
PRECAST CONCRETE CURB TO BE BURIED IN THE MIDDLE OF THE EMERGENCY SPILLWAY. CURB IS TO BE SET THE ENTIRE LENGTH OF THE SPILLWAY, AND EXTEND 3 FEET HORIZONTALLY INTO THE BERM. CURB TO BE INSTALLED BUTTED TIGHTLY UP AGAINST THE CURB NEXT TO IT.

EMERGENCY SPILLWAY
NOT TO SCALE — 10

DESC.	SIGN	SIZE	MOUNTING HEIGHT	DESCRIPTION	REFLEC–TORIZED
R1–1	STOP	30"x30"	7' – 0"	WHITE ON RED	YES
R7–8	VOLUNTARY BICYCLE LANE ONLY	12"x20"	7' – 0"	WHITE ON BLUE	YES
R7–8 (MODIFIED)	VOLUNTARY BICYCLE LANE ONLY	12"x20"	7' – 0"	WHITE ON BLUE	YES
R3–8	ONLY	30"x30"	7' – 0"	BLACK ON WHITE	YES
R5–11	AUTHORIZED VEHICLES ONLY	30"x24"	7' – 0"	BLACK ON WHITE	YES

1. TRAFFIC AND SAFETY SIGNAGE SHALL COMPLY WITH MUTCD STANDARDS.

SIGN TABLE
NOT TO SCALE — 9

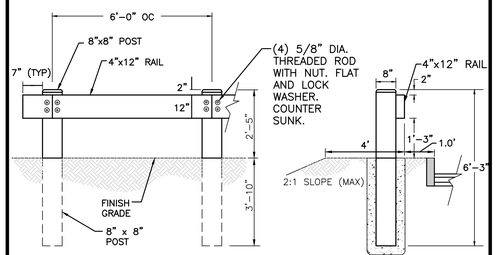

FRONT ELEVATION **TYPICAL SECTION AT CURB**

NOTES:
1. ALL TIMBER STOCK TO BE PRESSURE TREATED.
2. ALL HARDWARE TO BE GALVANIZED STEEL.

WOOD BEAM GUARDRAIL
NOT TO SCALE — 8

BIKE RACK SHALL BE INSTALLED AND ANCHORED PER MANUFACTURERS RECOMMENDATIONS

(DETAIL PROVIDED BY MANUFACTURER)

BELSON OUTDOORS
Model # CBBR-10TH-BK | Triangle Bike Racks - Black — Print | Close Window

BIKE RACK
NOT TO SCALE — 7

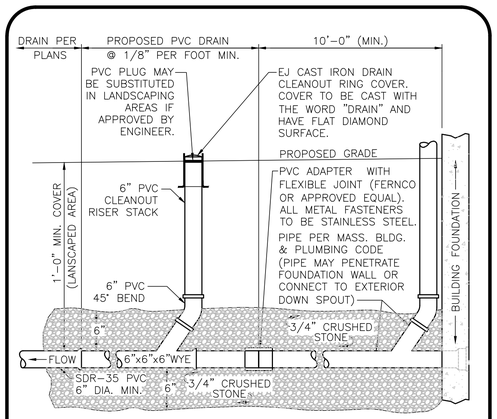

ROOF DRAIN
NOT TO SCALE — 6

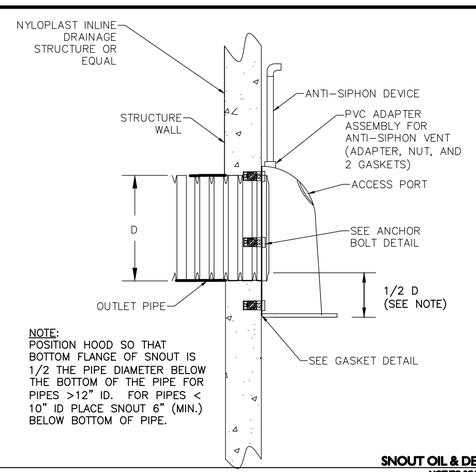

NOTE:
POSITION HOOD SO THAT BOTTOM FLANGE OF SNOUT IS 1/2 THE PIPE DIAMETER BELOW THE BOTTOM OF THE PIPE FOR PIPES >12" ID. FOR PIPES < 10" ID PLACE SNOUT 6" (MIN.) BELOW BOTTOM OF PIPE.

ANCHOR BOLT DETAIL **GASKET DETAIL**

SNOUT OIL & DEBRIS STOP
NOT TO SCALE — 5

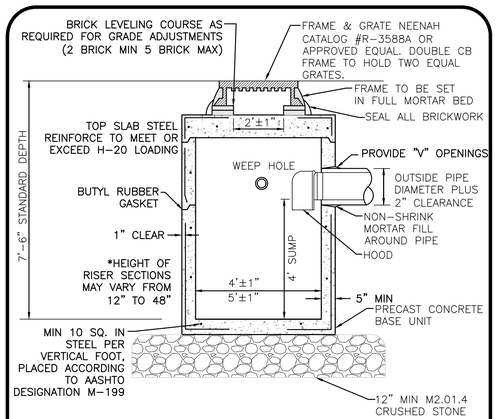

CATCH BASIN
NOT TO SCALE — 4

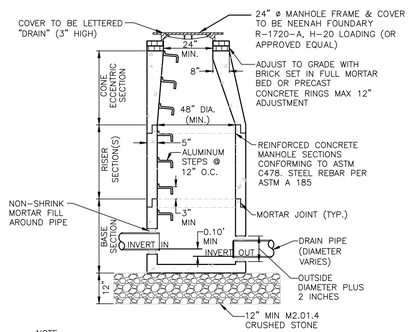

NOTE:
1. THE MANHOLE, INCLUDING ALL COMPONENT PARTS, SHALL HAVE ADEQUATE SPACE AND STRENGTH QUALITIES CONSIDERED NECESSARY FOR THE INTENDED SERVICE. SPACE REQUIREMENT AND CONFIGURATIONS SHALL BE AS SHOWN ON THE DRAWING. THE COMPLETE STRUCTURE SHALL BE OF SUCH MATERIAL AND QUALITY AS TO WITHSTAND (H–20 LOADING) WITHOUT FAILURE. VERTICAL FOOT OF MANHOLE.

PRECAST DRAIN MANHOLE
NOT TO SCALE — 3

MINIMUM THRUST BLOCK BEARING AREAS				
PIPE DIAMETER	90° BEND (SQ. FT.)	45° BEND (SQ. FT.)	22.5° BEND (SQ. FT.)	TEES, PLUGS, CAPS & HYDRANTS (SQ.FT.)
6"	5	3	3	4
8"	9	6	3	9
10"	13	7	4	12
12"	20	10	5	16

NOTES:
1. ALL WATER MAIN FITTINGS, BENDS, TEES, PLUGS ETC. SHALL BE RESTRAINED W/ THRUST BLOCKS EXCEPT WHERE NOTED.
2. ALL THRUST BLOCKS & COLLARS SHALL BE INSTALLED SO THAT THEY BEAR AGAINST UNDISTURBED EARTH.
3. SIZE OF CONCRETE THRUST BLOCKS SHALL BE AS NOTED BELOW.
4. MINIMUM COMPRESSIVE STRENGTH OF THRUST BLOCK CONCRETE SHALL BE 3,000 P.S.I.
5. KEEP CONCRETE CLEAR OF MECHANICAL JOINTS.
6. THE BELOW PREDICATED ON A WATER PRESSURE OF 225 PSI AND A SOIL RESISTANCE OF 2000 PSF (TILL). FOR OTHER SOILS THE VALUES IN THE ABOVE TABLE SHALL BE MULTIPLIED BY:

SOFT CLAY	4
SAND	2
SAND & GRAVEL	1.33
SHALE	0.4

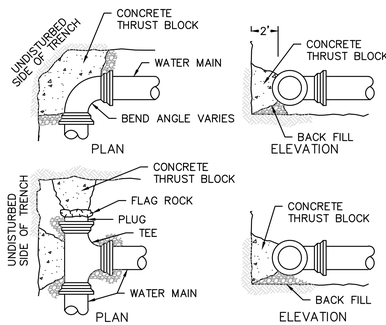

THRUST BLOCK DETAIL
NOT TO SCALE — 2

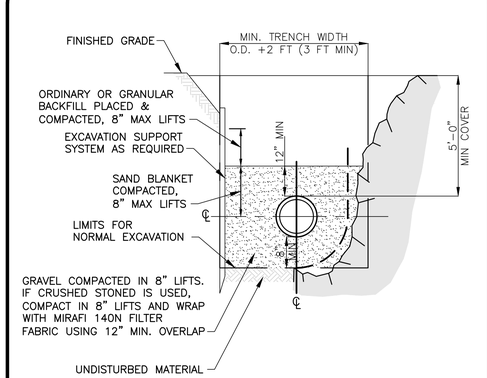

WATER TRENCH SECTION
NOT TO SCALE — 1

APPROVED BY
TOWN OF ROCHESTER PLANNING BOARD

DATE SUBMITTED: _____

DATE ENDORSED: _____

DATE APPROVED: _____

_____

_____

_____

_____

_____

_____

TOWN OF ROCHESTER PLANNING BOARD

ISSUED FOR REVIEW
10-25-2019 REV. 6:12-01-2020

COMMONWEALTH OF MASSACHUSETTS — PHILIP L CORDEIRO CIVIL NO. 47083 — REGISTERED PROFESSIONAL ENGINEER

Philip L Cordeiro
c=US, o=Allen and Major Associates Inc., ou=A01410C000001759B8B4FD00002012, cn=Philip L Cordeiro
2021.01.26 14:31:02 -05'00'

PROFESSIONAL ENGINEER FOR ALLEN & MAJOR ASSOCIATES, INC.

REV	DATE	DESCRIPTION
6	12-01-2020	PER PLANNING BOARD PEER REVIEW COMMENTS
5	10-23-2020	PER PLANNING BOARD PEER REVIEW COMMENTS
4	10-02-2020	PER PLANNING BOARD PEER REVIEW COMMENTS
3	07-31-2020	PER PLANNING BOARD PEER REVIEW COMMENTS
2	07-09-2020	PER NOI PEER REVIEW COMMENTS
1	05-18-2020	PER NOI PEER REVIEW COMMENTS

APPLICANT\OWNER:
STEEN REALTY AND DEVELOPMENT CORPORATION
3 LEDGEWOOD BOULEVARD DARTMOUTH, MA 02747

PROJECT:
ROCHESTER CROSSROADS
SMART GROWTH DEVELOPMENT
CRANBERRY HIGHWAY
ROCHESTER, MA

PROJECT NO.	2518-01	DATE:	10-25-2019
SCALE:	AS SHOWN	DWG. NAME:	C2518-01_
DESIGNED BY:	PGM/CMcC	CHECKED BY:	PC

PREPARED BY:
ALLEN & MAJOR ASSOCIATES, INC.
civil engineering ◆ land surveying
environmental consulting ◆ landscape architecture
www.allenmajor.com
10 MAIN STREET
LAKEVILLE MA 02347
TEL: (508) 923-1010
FAX: (508) 923-6309
WOBURN, MA ◆ LAKEVILLE, MA ◆ MANCHESTER, NH

THIS DRAWING HAS BEEN PREPARED IN DIGITAL FORMAT. CLIENT/CLIENT'S REPRESENTATIVE OR CONSULTANTS MAY BE PROVIDED COPIES OF DRAWINGS AND SPECIFICATIONS FOR HIS/HER INFORMATION AND/OR SPECIFIC USE ON THIS PROJECT. DUE TO THE POTENTIAL THAT THE PROVIDED INFORMATION MAY BE MODIFIED UNINTENTIONALLY OR OTHERWISE, ALLEN & MAJOR ASSOCIATES, INC. MAY REMOVE ALL INDICATION OF THE DOCUMENT'S AUTHORSHIP ON THE DIGITAL MEDIA. PRINTED REPRESENTATIONS OR PORTABLE DOCUMENT FORMAT OF THE DRAWINGS AND SPECIFICATIONS ISSUED SHALL BE THE ONLY RECORD COPIES OF ALLEN & MAJOR ASSOCIATES, INC.'S WORK PRODUCT.

DRAWING TITLE: DETAILS

SHEET No. C-505

Copyright©2020 Allen & Major Associates, Inc. All Rights Reserved

M:\PROJECTS\2518-01\CIVIL\DRAWINGS\CURRENT\C-2518-01_DETAILS.DWG

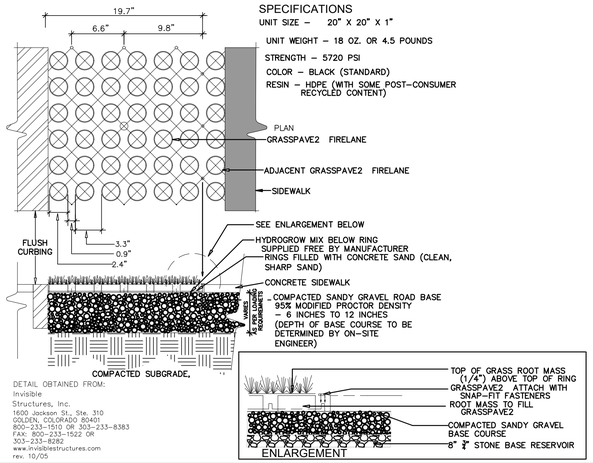

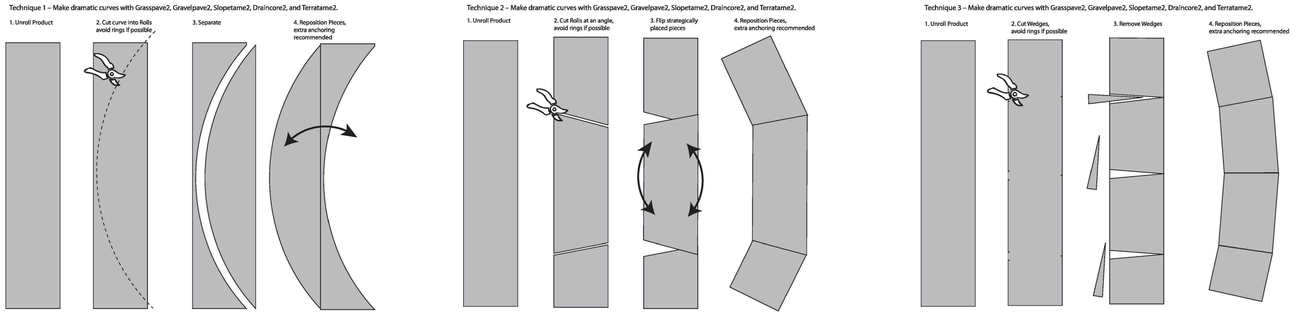

NOTES:

1. CONTRACTOR TO OBTAIN SITE SPECIFIC LAYOUT DRAWINGS FOR ENGINEER REVIEW PRIOR TO CONSTRUCTION.

TYPICAL GRASSPAVE DETAIL
NOT TO SCALE

6

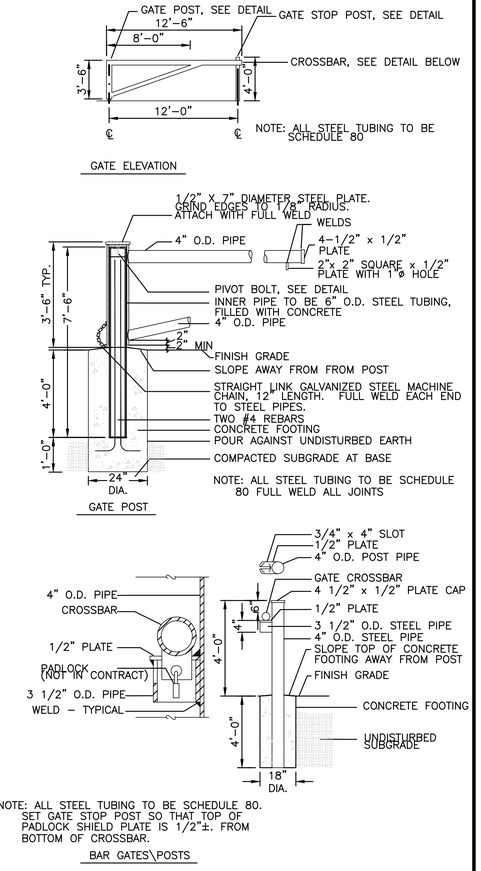

EMERGENCY ACCESS GATE
NOT TO SCALE

4

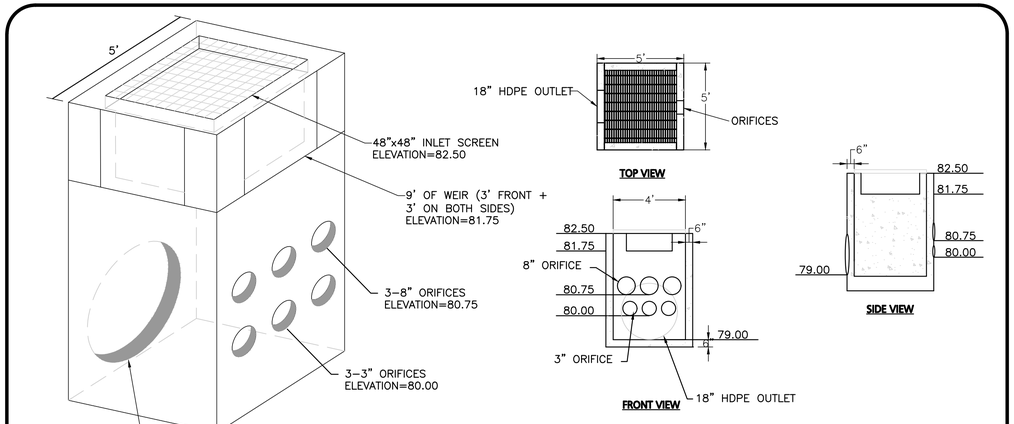

OUTLET STRUCTURE DETAIL
NOT TO SCALE

5

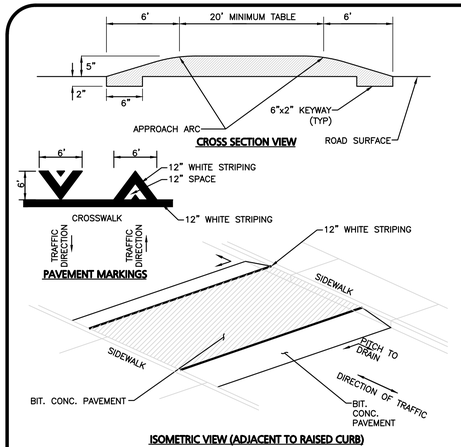

RAISED SPEED TABLE DETAIL
NOT TO SCALE

3

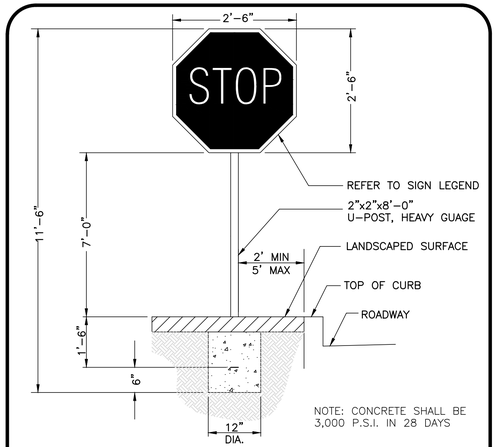

STOP SIGN DETAIL
NOT TO SCALE

2

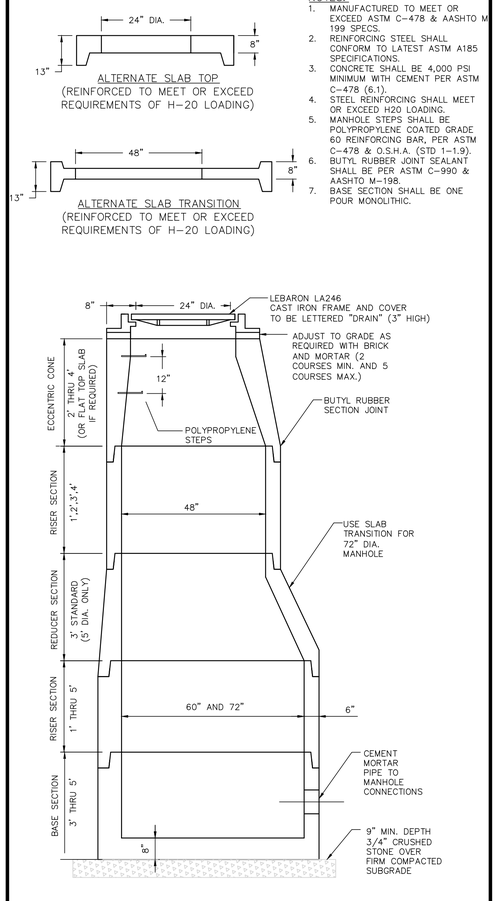

LARGE DIAMETER PRECAST CONCRETE MANHOLE
NOT TO SCALE

1

M:\PROJECTS\2518-01\CIVIL\DRAWINGS\CURRENT\C-2518-01_DETAILS.DWG

APPROVED BY
TOWN OF ROCHESTER PLANNING BOARD

DATE SUBMITTED: _____

DATE ENDORSED: _____

DATE APPROVED: _____

_____

_____

_____

_____

_____

_____

_____

TOWN OF ROCHESTER PLANNING BOARD

ISSUED FOR REVIEW
10-25-2019 REV. 6:12-01-2020

COMMONWEALTH OF MASSACHUSETTS
PHILIP L CORDEIRO
CIVIL
NO. 47083
REGISTERED PROFESSIONAL ENGINEER

Philip L Cordeiro
c=US, o=Allen and Major Associates Inc., ou=A01410C0000017598BB4F D00002012, cn=Philip L Cordeiro
2021.01.26 14:31:28 -05'00'

PROFESSIONAL ENGINEER FOR
ALLEN & MAJOR ASSOCIATES, INC.

REV	DATE	DESCRIPTION
6	12-01-2020	PER PLANNING BOARD PEER REVIEW COMMENTS
5	10-23-2020	PER PLANNING BOARD PEER REVIEW COMMENTS
4	10-02-2020	PER PLANNING BOARD PEER REVIEW COMMENTS
3	07-31-2020	PER PLANNING BOARD PEER REVIEW COMMENTS
2	07-09-2020	PER NOI PEER REVIEW COMMENTS
1	05-18-2020	PER NOI PEER REVIEW COMMENTS

APPLICANT\OWNER:
STEEN REALTY AND DEVELOPMENT CORPORATION
3 LEDGEWOOD BOULEVARD DARTMOUTH, MA 02747

PROJECT:
ROCHESTER CROSSROADS
SMART GROWTH DEVELOPMENT
CRANBERRY HIGHWAY
ROCHESTER, MA

PROJECT NO.	2518-01	DATE:	10-25-2019
SCALE:	AS SHOWN	DWG. NAME:	C2518-01_
DESIGNED BY:	PGM/CMcC	CHECKED BY:	PC

PREPARED BY:
ALLEN & MAJOR ASSOCIATES, INC.
civil engineering ◆ land surveying
environmental consulting ◆ landscape architecture
www.allenmajor.com
10 MAIN STREET
LAKEVILLE MA 02347
TEL: (508) 923-1010
FAX: (508) 923-6309
WOBURN, MA ◆ LAKEVILLE, MA ◆ MANCHESTER, NH

THIS DRAWING HAS BEEN PREPARED IN DIGITAL FORMAT. CLIENT/CLIENT'S REPRESENTATIVE OR CONSULTANTS MAY BE PROVIDED COPIES OF DRAWINGS AND SPECIFICATIONS FOR HIS/HER INFORMATION AND/OR SPECIFIC USE ON THIS PROJECT. DUE TO THE POTENTIAL THAT THE PROVIDED INFORMATION MAY BE MODIFIED UNINTENTIONALLY OR OTHERWISE, ALLEN & MAJOR ASSOCIATES, INC. MAY REMOVE ALL INDICATION OF THE DOCUMENT'S AUTHORSHIP ON THE DIGITAL MEDIA. PRINTED REPRESENTATIONS OR PORTABLE DOCUMENT FORMAT OF THE DRAWINGS AND SPECIFICATIONS ISSUED SHALL BE THE ONLY RECORD COPIES OF ALLEN & MAJOR ASSOCIATES, INC.'S WORK PRODUCT.

DRAWING TITLE: DETAILS

SHEET No. C-506

Copyright©2020 Allen & Major Associates, Inc. All Rights Reserved

Maxi*Force*™ Collapsible Bollard

Standard Body, Padlock Operated, Standard Style 1 Head, Simple Base

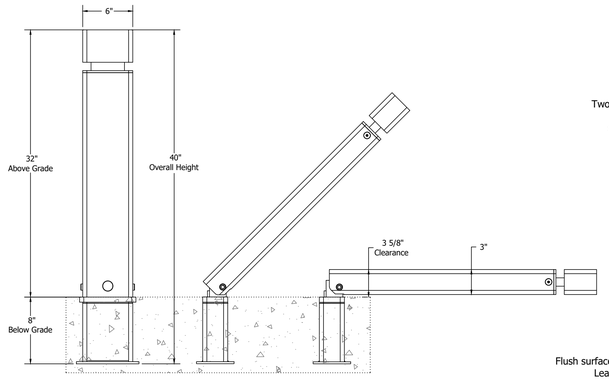

AHJ approved in many cities / counties / campuses for use in fire lanes per International Fire Code (IFC) 503

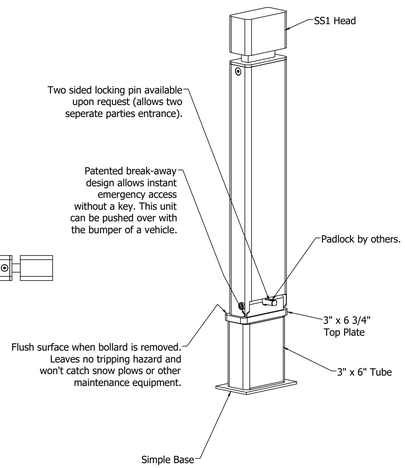

- Low Maintenance / Durable steel construction
- One year warranty / Protected by $1,000,000 in liability insurance
- No complex assembly required in the field
- Custom sizes, options, colors and finishes available upon request
- Finish options available (add code to the end of the model number)
  - Powder coated (PC)
  - Powder coated with DRYZINC primer (PCZ)
  - Hot dip galvanized (G)
  - Hot dip galvanized & powder coated (GPC)
- Reflective tape available upon request

COLLAPSIBLE BOLLARD DETAIL
NOT TO SCALE

4

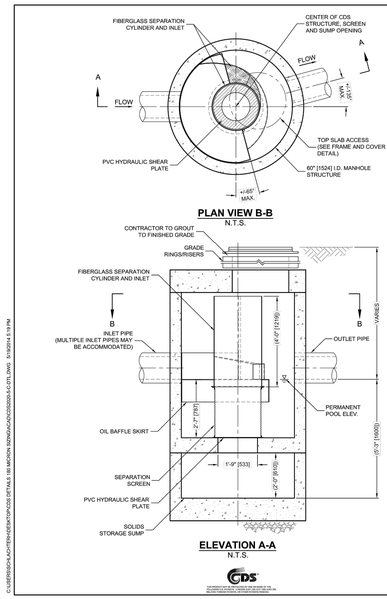

CDS2020-5-C DESIGN NOTES
THE STANDARD CDS2020-5-C CONFIGURATION IS SHOWN. ALTERNATE CONFIGURATIONS ARE AVAILABLE AND ARE LISTED BELOW. SOME CONFIGURATIONS MAY BE COMBINED TO SUIT SITE REQUIREMENTS.
CONFIGURATION DESCRIPTION
GRATED INLET ONLY (NO INLET PIPE)
GRATED INLET WITH INLET PIPE OR PIPES
CURB INLET ONLY (NO INLET PIPE)
CURB INLET WITH INLET PIPE OR PIPES
SEPARATE OIL BAFFLE (SINGLE INLET PIPE REQUIRED FOR THIS CONFIGURATION)
SEDIMENT WEIR FOR NJDEP / NJCAT CONFORMING UNITS

FRAME AND COVER
(DIAMETER VARIES)
N.T.S.

SITE SPECIFIC DATA REQUIREMENTS			
STRUCTURE ID			*
WATER QUALITY FLOW RATE (CFS OR L/s)			*
PEAK FLOW RATE (CFS OR L/s)			*
RETURN PERIOD OF PEAK FLOW (YRS)			*
SCREEN APERTURE (2400 OR 4700)			*
PIPE DATA:	I.E.	MATERIAL	DIAMETER
INLET PIPE 1	*	*	*
INLET PIPE 2	*	*	*
OUTLET PIPE	*	*	*
RIM ELEVATION			*
ANTI-FLOTATION BALLAST	WIDTH		HEIGHT
	*		*
NOTES/SPECIAL REQUIREMENTS:			

* PER ENGINEER OF RECORD

GENERAL NOTES
1. CONTECH TO PROVIDE ALL MATERIALS UNLESS NOTED OTHERWISE.
2. DIMENSIONS MARKED WITH ( ) ARE REFERENCE DIMENSIONS. ACTUAL DIMENSIONS MAY VARY.
3. FOR FABRICATION DRAWINGS WITH DETAILED STRUCTURE DIMENSIONS AND WEIGHTS, PLEASE CONTACT YOUR CONTECH ENGINEERED SOLUTIONS LLC REPRESENTATIVE, www.contechES.com
4. CDS WATER QUALITY STRUCTURE SHALL BE IN ACCORDANCE WITH ALL DESIGN DATA AND INFORMATION CONTAINED IN THIS DRAWING.
5. STRUCTURE SHALL MEET AASHTO HS20 AND CASTINGS SHALL MEET HS20 (AASHTO M 306) LOAD RATING, ASSURING GROUNDWATER ELEVATION AT, OR BELOW, THE OUTLET PIPE INVERT ELEVATION. ENGINEER OF RECORD TO CONFIRM ACTUAL GROUNDWATER ELEVATION.
6. PVC HYDRAULIC SHEAR PLATE IS PLACED ON SHELF AT BOTTOM OF SCREEN CYLINDER. REMOVE AND REPLACE AS NECESSARY DURING MAINTENANCE CLEANING.

INSTALLATION NOTES
A. ANY SUB-BASE, BACKFILL DEPTH, AND/OR ANTI-FLOTATION PROVISIONS ARE SITE-SPECIFIC DESIGN CONSIDERATIONS AND SHALL BE SPECIFIED BY ENGINEER OF RECORD.
B. CONTRACTOR TO PROVIDE EQUIPMENT WITH SUFFICIENT LIFTING AND REACH CAPACITY TO LIFT AND SET THE CDS MANHOLE STRUCTURE (LIFTING CLUTCHES PROVIDED).
C. CONTRACTOR TO ADD JOINT SEALANT BETWEEN ALL STRUCTURE SECTIONS, AND ASSEMBLE STRUCTURE.
D. CONTRACTOR TO PROVIDE, INSTALL, AND GROUT PIPES. MATCH PIPE INVERTS WITH ELEVATIONS SHOWN.
E. CONTRACTOR TO TAKE APPROPRIATE MEASURES TO ASSURE UNIT IS WATER TIGHT, HOLDING WATER TO FLOWLINE INVERT MINIMUM. IT IS SUGGESTED THAT ALL JOINTS BELOW PIPE INVERTS ARE GROUTED.

CONTECH ENGINEERED SOLUTIONS LLC
www.contechES.com
9025 Centre Pointe Dr., Suite 400, West Chester, OH 45069
800-338-1122 513-645-7000 513-645-7993 FAX

CDS2020-5-C
INLINE CDS
STANDARD DETAIL

NOTES:

1. REFER TO SITE PLANS FOR ELEVATIONS & LOCATIONS.
2. CDS 2020-5-C UNIT SHALL BE USED FOR PDMH 13.

WATER QUALITY STRUCTURE - CDS 2020-5-C
NOT TO SCALE

3

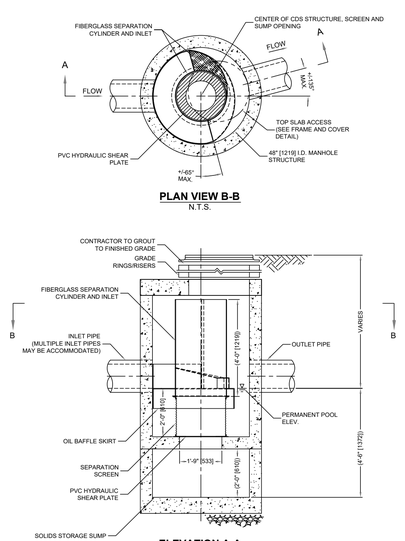

CDS2015-4-C DESIGN NOTES
CDS2015-4-C RATED TREATMENT CAPACITY IS 1.4 CFS, OR PER LOCAL REGULATIONS.
THE STANDARD CDS2015-4-C CONFIGURATION IS SHOWN. ALTERNATE CONFIGURATIONS ARE AVAILABLE AND ARE LISTED BELOW. SOME CONFIGURATIONS MAY BE COMBINED TO SUIT SITE REQUIREMENTS.
CONFIGURATION DESCRIPTION
GRATED INLET ONLY (NO INLET PIPE)
GRATED INLET WITH INLET PIPE OR PIPES
CURB INLET ONLY (NO INLET PIPE)
CURB INLET WITH INLET PIPE OR PIPES

FRAME AND COVER
(DIAMETER VARIES)
N.T.S.

SITE SPECIFIC DATA REQUIREMENTS			
STRUCTURE ID			*
WATER QUALITY FLOW RATE (CFS OR L/s)			*
PEAK FLOW RATE (CFS OR L/s)			*
RETURN PERIOD OF PEAK FLOW (YRS)			*
SCREEN APERTURE (2400 OR 4700)			*
PIPE DATA:	I.E.	MATERIAL	DIAMETER
INLET PIPE 1	*	*	*
INLET PIPE 2	*	*	*
OUTLET PIPE	*	*	*
RIM ELEVATION			*
ANTI-FLOTATION BALLAST	WIDTH		HEIGHT
	*		*
NOTES/SPECIAL REQUIREMENTS:			

* PER ENGINEER OF RECORD

GENERAL NOTES
1. CONTECH TO PROVIDE ALL MATERIALS UNLESS NOTED OTHERWISE.
2. FOR SITE SPECIFIC DRAWINGS WITH DETAILED STRUCTURE DIMENSIONS AND WEIGHT, PLEASE CONTACT YOUR CONTECH ENGINEERED
3. CDS WATER QUALITY STRUCTURE SHALL BE IN ACCORDANCE WITH ALL DESIGN DATA AND INFORMATION CONTAINED IN THIS DRAWING. CONTRACTOR TO CONFIRM STRUCTURE MEETS REQUIREMENTS OF PROJECT.
4. STRUCTURE SHALL MEET AASHTO H520 LOAD RATING, ASSUMING EARTH COVER OF 0' - 2', AND GROUNDWATER ELEVATION AT, OR BELOW, THE OUTLET PIPE INVERT ELEVATION. ENGINEER OF RECORD TO CONFIRM ACTUAL GROUNDWATER ELEVATION. CASTINGS SHALL MEET AASHTO M306 AND BE CAST WITH THE CONTECH LOGO.
5. IF REQUIRED, PVC HYDRAULIC SHEAR PLATE IS PLACED ON SHELF AT BOTTOM OF SCREEN CYLINDER. REMOVE AND REPLACE AS NECESSARY DURING MAINTENANCE CLEANING.
6. CDS STRUCTURE SHALL BE PRECAST CONCRETE CONFORMING TO ASTM C-478 AND AASHTO LOAD FACTOR DESIGN METHOD.

INSTALLATION NOTES
A. ANY SUB-BASE, BACKFILL DEPTH, AND/OR ANTI-FLOTATION PROVISIONS ARE SITE-SPECIFIC DESIGN CONSIDERATIONS AND SHALL BE SPECIFIED BY ENGINEER OF RECORD.
B. CONTRACTOR TO PROVIDE EQUIPMENT WITH SUFFICIENT LIFTING AND REACH CAPACITY TO LIFT AND SET THE CDS MANHOLE STRUCTURE.
C. CONTRACTOR TO INSTALL JOINT SEALANT BETWEEN ALL STRUCTURE SECTIONS AND ASSEMBLE STRUCTURE.
D. CONTRACTOR TO PROVIDE, INSTALL, AND GROUT INLET AND OUTLET PIPE(S). MATCH PIPE INVERTS WITH ELEVATIONS SHOWN. ALL PIPE CENTERLINES TO MATCH PIPE OPENING CENTERLINES.
E. CONTRACTOR TO TAKE APPROPRIATE MEASURES TO ASSURE UNIT IS WATER TIGHT, HOLDING WATER TO FLOWLINE INVERT MINIMUM. IT IS SUGGESTED THAT ALL JOINTS BELOW PIPE INVERTS ARE GROUTED.

CONTECH ENGINEERED SOLUTIONS LLC
www.contechES.com
9025 Centre Pointe Dr., Suite 400, West Chester, OH 45069
800-338-1122 513-645-7000 513-645-7993 FAX

CDS2015-4-C
ONLINE CDS
STANDARD DETAIL

NOTES:

1. REFER TO SITE PLANS FOR ELEVATIONS & LOCATIONS.
2. CDS 2015-4-C UNIT SHALL BE USED FOR PCB 4, PCB 16A, PCB 20, PCB 21A, PCB 22, PCB 23, PDMH 19.

WATER QUALITY STRUCTURE - CDS 2015-4-C
NOT TO SCALE

2

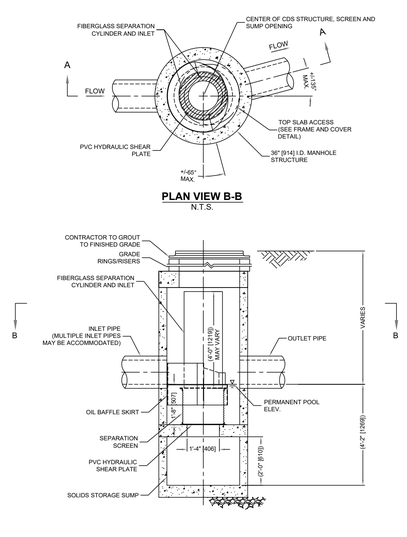

CDS1515-3-C DESIGN NOTES
CDS1515-3-C RATED TREATMENT CAPACITY IS 1.0 CFS, OR PER LOCAL REGULATIONS.
THE STANDARD CDS1515-3-C CONFIGURATION IS SHOWN.

FRAME AND COVER
(DIAMETER VARIES)
N.T.S.

SITE SPECIFIC DATA REQUIREMENTS			
STRUCTURE ID			*
WATER QUALITY FLOW RATE (CFS OR L/s)			*
PEAK FLOW RATE (CFS OR L/s)			*
RETURN PERIOD OF PEAK FLOW (YRS)			*
SCREEN APERTURE (2400 OR 4700)			*
PIPE DATA:	I.E.	MATERIAL	DIAMETER
INLET PIPE 1	*	*	*
INLET PIPE 2	*	*	*
OUTLET PIPE	*	*	*
RIM ELEVATION			*
ANTI-FLOTATION BALLAST	WIDTH		HEIGHT
	*		*
NOTES/SPECIAL REQUIREMENTS:			

* PER ENGINEER OF RECORD

GENERAL NOTES
1. CONTECH TO PROVIDE ALL MATERIALS UNLESS NOTED OTHERWISE.
2. FOR SITE SPECIFIC DRAWINGS WITH DETAILED STRUCTURE DIMENSIONS AND WEIGHT, PLEASE CONTACT YOUR CONTECH ENGINEERED
3. CDS WATER QUALITY STRUCTURE SHALL BE IN ACCORDANCE WITH ALL DESIGN DATA AND INFORMATION CONTAINED IN THIS DRAWING. CONTRACTOR TO CONFIRM STRUCTURE MEETS REQUIREMENTS OF PROJECT.
4. STRUCTURE SHALL MEET AASHTO H520 LOAD RATING, ASSUMING EARTH COVER OF 0' - 2', AND GROUNDWATER ELEVATION AT, OR BELOW, THE OUTLET PIPE INVERT ELEVATION. ENGINEER OF RECORD TO CONFIRM ACTUAL GROUNDWATER ELEVATION. CASTINGS SHALL MEET AASHTO M306 AND BE CAST WITH THE CONTECH LOGO.
5. IF REQUIRED, PVC HYDRAULIC SHEAR PLATE IS PLACED ON SHELF AT BOTTOM OF SCREEN CYLINDER. REMOVE AND REPLACE AS NECESSARY DURING MAINTENANCE CLEANING.
6. CDS STRUCTURE SHALL BE PRECAST CONCRETE CONFORMING TO ASTM C-478 AND AASHTO LOAD FACTOR DESIGN METHOD.

INSTALLATION NOTES
A. ANY SUB-BASE, BACKFILL DEPTH, AND/OR ANTI-FLOTATION PROVISIONS ARE SITE-SPECIFIC DESIGN CONSIDERATIONS AND SHALL BE SPECIFIED BY ENGINEER OF RECORD.
B. CONTRACTOR TO PROVIDE EQUIPMENT WITH SUFFICIENT LIFTING AND REACH CAPACITY TO LIFT AND SET THE CDS MANHOLE STRUCTURE.
C. CONTRACTOR TO INSTALL JOINT SEALANT BETWEEN ALL STRUCTURE SECTIONS AND ASSEMBLE STRUCTURE.
D. CONTRACTOR TO PROVIDE, INSTALL, AND GROUT INLET AND OUTLET PIPE(S). MATCH PIPE INVERTS WITH ELEVATIONS SHOWN. ALL PIPE CENTERLINES TO MATCH PIPE OPENING CENTERLINES.
E. CONTRACTOR TO TAKE APPROPRIATE MEASURES TO ASSURE UNIT IS WATER TIGHT, HOLDING WATER TO FLOWLINE INVERT MINIMUM. IT IS SUGGESTED THAT ALL JOINTS BELOW PIPE INVERTS ARE GROUTED.

CONTECH ENGINEERED SOLUTIONS LLC
www.contechES.com
9025 Centre Pointe Dr., Suite 400, West Chester, OH 45069
800-338-1122 513-645-7000 513-645-7993 FAX

CDS1515-3-C
ONLINE CDS
STANDARD DETAIL

NOTES:

1. REFER TO SITE PLANS FOR ELEVATIONS & LOCATIONS.
2. CDS 1515-3-C UNIT SHALL BE USED FOR PDMH 2, PDMH 3, PDMH 6, PDMH 21.

WATER QUALITY STRUCTURE - CDS 1515-3-C
NOT TO SCALE

1

M:\PROJECTS\2518-01\CIVIL\DRAWINGS\CURRENT\C-2518-01_DETAILS.DWG

APPROVED BY
TOWN OF ROCHESTER PLANNING BOARD

DATE SUBMITTED: _____

DATE ENDORSED: _____

DATE APPROVED: _____

_____

_____

_____

_____

_____

_____

TOWN OF ROCHESTER PLANNING BOARD

ISSUED FOR REVIEW
10-25-2019 REV. 6:12-01-2020

COMMONWEALTH OF MASSACHUSETTS
PHILIP L CORDEIRO
CIVIL
NO. 47083
REGISTERED PROFESSIONAL ENGINEER

Philip L Cordeiro
c=US, o=Allen and Major Associates Inc., ou=A01410C000001759BB4FD00002012, cn=Philip L Cordeiro
2021.01.26 14:31:57 -05'00'

PROFESSIONAL ENGINEER FOR
ALLEN & MAJOR ASSOCIATES, INC.

REV	DATE	DESCRIPTION
6	12-01-2020	PER PLANNING BOARD PEER REVIEW COMMENTS
5	10-23-2020	PER PLANNING BOARD PEER REVIEW COMMENTS
4	10-02-2020	PER PLANNING BOARD PEER REVIEW COMMENTS
3	07-31-2020	PER PLANNING BOARD PEER REVIEW COMMENTS
2	07-09-2020	PER NOI PEER REVIEW COMMENTS
1	05-18-2020	PER NOI PEER REVIEW COMMENTS

APPLICANT\OWNER:

STEEN
REALTY AND DEVELOPMENT CORPORATION
3 LEDGEWOOD BOULEVARD DARTMOUTH, MA 02747

PROJECT:

ROCHESTER CROSSROADS
SMART GROWTH DEVELOPMENT
CRANBERRY HIGHWAY
ROCHESTER, MA

PROJECT NO.	2518-01	DATE:	10-25-2019
SCALE:	AS SHOWN	DWG. NAME:	C2518-01_
DESIGNED BY:	PGM/CMcC	CHECKED BY:	PC

PREPARED BY:

ALLEN & MAJOR ASSOCIATES, INC.
civil engineering ◆ land surveying
environmental consulting ◆ landscape architecture
www.allenmajor.com
10 MAIN STREET
LAKEVILLE MA 02347
TEL: (508) 923-1010
FAX: (508) 923-6309

WOBURN, MA ◆ LAKEVILLE, MA ◆ MANCHESTER, NH

THIS DRAWING HAS BEEN PREPARED IN DIGITAL FORMAT. CLIENT/CLIENT'S REPRESENTATIVE OR CONSULTANTS MAY BE PROVIDED COPIES OF DRAWINGS AND SPECIFICATIONS FOR HIS/HER INFORMATION AND/OR SPECIFIC USE ON THIS PROJECT. DUE TO THE POTENTIAL THAT THE PROVIDED INFORMATION MAY BE MODIFIED UNINTENTIONALLY OR OTHERWISE, ALLEN & MAJOR ASSOCIATES, INC. MAY REMOVE ALL INDICATION OF THE DOCUMENT'S AUTHORSHIP ON THE DIGITAL MEDIA. PRINTED REPRESENTATIONS OR PORTABLE DOCUMENT FORMAT OF THE DRAWINGS AND SPECIFICATIONS ISSUED SHALL BE THE ONLY RECORD COPIES OF ALLEN & MAJOR ASSOCIATES, INC.'S WORK PRODUCT.

DRAWING TITLE: DETAILS

SHEET No. C-507

Copyright©2020 Allen & Major Associates, Inc.
All Rights Reserved

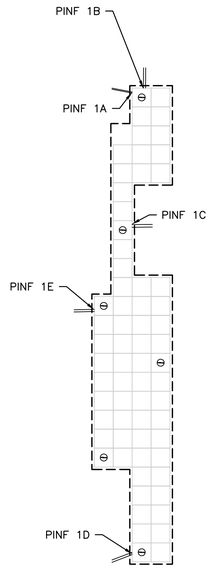

PROPOSED LAYOUT

SYSTEM 1
66 UNITS – 3.5' HIGH
BOT. STONE EL=79.00
BOT. RETAIN-IT EL=79.50
TOP RETAIN-IT EL=83.67
PINF 1A INV=81.80
PINF 1B INV=81.09
PINF 1C INV=80.70
PINF 1D INV=81.25
PINF 1E INV=81.80

PROPOSED LAYOUT

SYSTEM 3
5 UNITS – 3.0' HIGH
1 UNIT – 3.5' HIGH
BOT. STONE EL=79.00
BOT. RETAIN-IT EL=79.50
TOP RETAIN-IT EL=83.67
PINF 3 INV=81.27

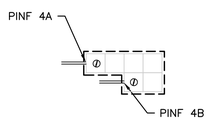

PROPOSED LAYOUT

SYSTEM 4
6 UNITS – 3' HIGH
BOT. STONE EL=79.00
BOT. RETAIN-IT EL=79.50
TOP RETAIN-IT EL=83.17
PINF 4A INV=80.84
PINF 4B INV=81.24

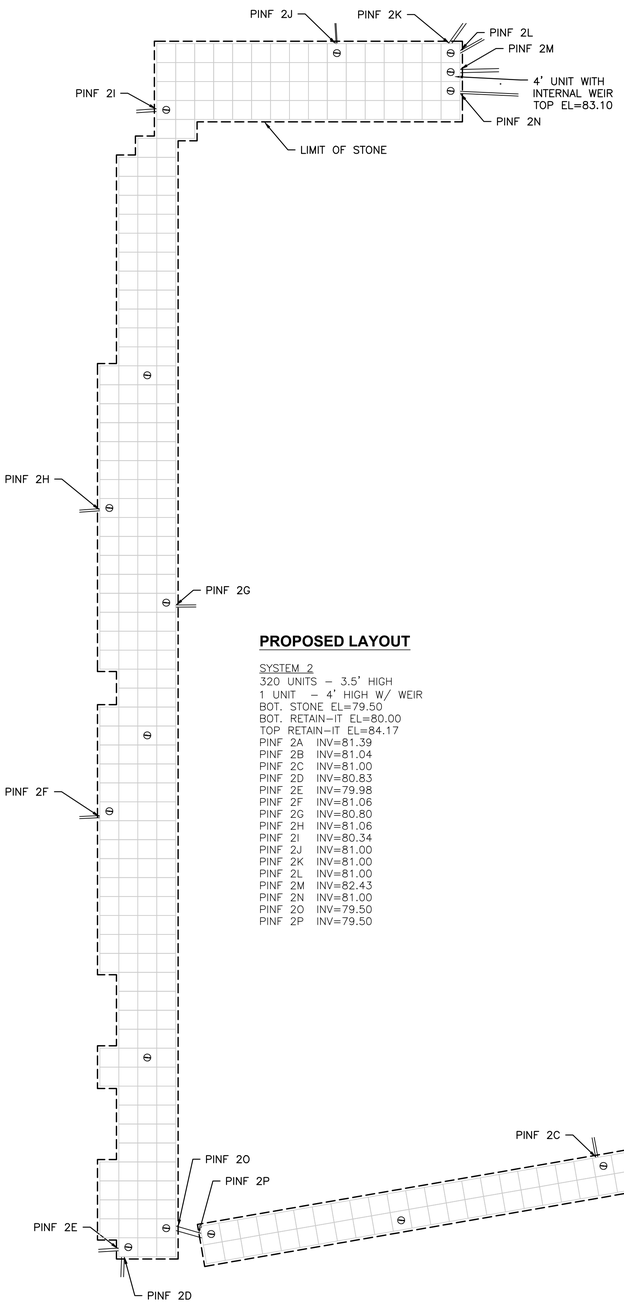

PROPOSED LAYOUT

SYSTEM 2
320 UNITS – 3.5' HIGH
1 UNIT – 4' HIGH W/ WEIR
BOT. STONE EL=79.50
BOT. RETAIN-IT EL=80.00
TOP RETAIN-IT EL=84.17
PINF 2A INV=81.39
PINF 2B INV=81.04
PINF 2C INV=81.00
PINF 2D INV=80.83
PINF 2E INV=79.98
PINF 2F INV=81.06
PINF 2G INV=80.80
PINF 2H INV=81.06
PINF 2I INV=80.34
PINF 2J INV=81.00
PINF 2K INV=81.00
PINF 2L INV=81.00
PINF 2M INV=82.43
PINF 2N INV=81.00
PINF 2O INV=79.50
PINF 2P INV=79.50

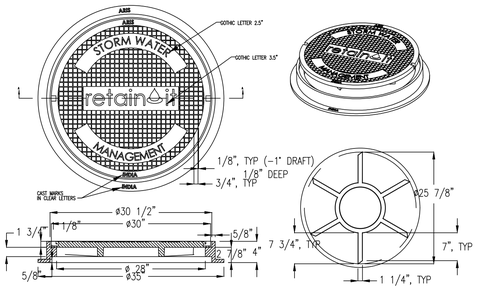

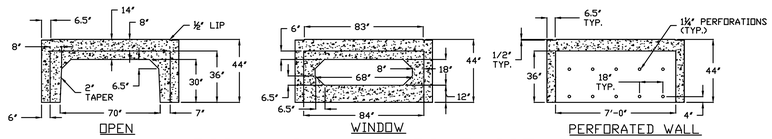

TYPICAL 3' UNIT DIMENSIONS

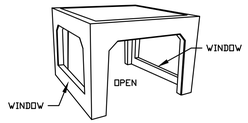

MULTI ROW CENTER

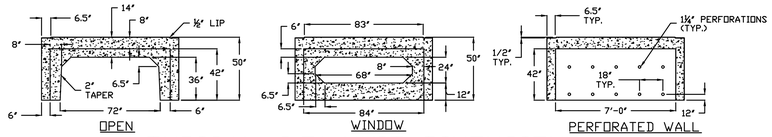

TYPICAL 3.5' UNIT DIMENSIONS

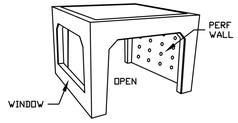

MULTI ROW PERIMETER

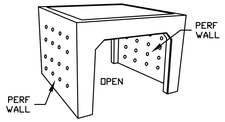

SINGLE ROW CENTER

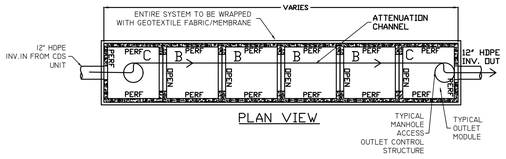

PLAN VIEW

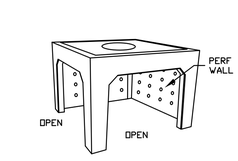

MULTI ROW CORNER

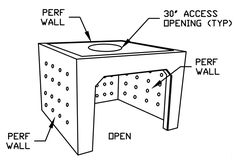

SINGLE ROW END

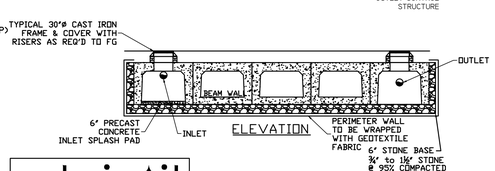

ELEVATION

retain it
Stormwater Management Systems

TYPICAL INFILTRATION

APPROVED BY
TOWN OF ROCHESTER PLANNING BOARD

DATE SUBMITTED: _____

DATE ENDORSED: _____

DATE APPROVED: _____

_____

_____

_____

_____

_____

_____

_____

TOWN OF ROCHESTER PLANNING BOARD

ISSUED FOR REVIEW
10-25-2019 REV. 6:12-01-2020

COMMONWEALTH OF MASSACHUSETTS
PHILIP L CORDEIRO
CIVIL
NO. 47083
REGISTERED PROFESSIONAL ENGINEER

Philip L Cordeiro
c=US, o=Allen and Major Associates Inc., ou=A01410C0000017598BB4FD00002012, cn=Philip L Cordeiro
2021.01.26 14:32:24 -05'00'

PROFESSIONAL ENGINEER FOR
ALLEN & MAJOR ASSOCIATES, INC.

REV	DATE	DESCRIPTION
6	12-01-2020	PER PLANNING BOARD PEER REVIEW COMMENTS
5	10-23-2020	PER PLANNING BOARD PEER REVIEW COMMENTS
4	10-02-2020	PER PLANNING BOARD PEER REVIEW COMMENTS
3	07-31-2020	PER PLANNING BOARD PEER REVIEW COMMENTS
2	07-09-2020	PER NOI PEER REVIEW COMMENTS
1	05-18-2020	PER NOI PEER REVIEW COMMENTS

APPLICANT\OWNER:

STEEN
REALTY AND DEVELOPMENT CORPORATION
3 LEDGEWOOD BOULEVARD DARTMOUTH, MA 02747

PROJECT:

ROCHESTER CROSSROADS
SMART GROWTH DEVELOPMENT
CRANBERRY HIGHWAY
ROCHESTER, MA

PROJECT NO.	2518-01	DATE:	10-25-2019
SCALE:	AS SHOWN	DWG. NAME:	C2518-01_
DESIGNED BY:	PGM/CMcC	CHECKED BY:	PC

PREPARED BY:

ALLEN & MAJOR ASSOCIATES, INC.
civil engineering ◆ land surveying
environmental consulting ◆ landscape architecture
www.allenmajor.com
10 MAIN STREET
LAKEVILLE MA 02347
TEL: (508) 923-1010
FAX: (508) 923-6309
WOBURN, MA ◆ LAKEVILLE, MA ◆ MANCHESTER, NH

THIS DRAWING HAS BEEN PREPARED IN DIGITAL FORMAT. CLIENT/CLIENT'S REPRESENTATIVE OR CONSULTANTS MAY BE PROVIDED COPIES OF DRAWINGS AND SPECIFICATIONS FOR HIS/HER INFORMATION AND/OR SPECIFIC USE ON THIS PROJECT. DUE TO THE POTENTIAL THAT THE PROVIDED INFORMATION MAY BE MODIFIED UNINTENTIONALLY OR OTHERWISE, ALLEN & MAJOR ASSOCIATES, INC. MAY REMOVE ALL INDICATION OF THE DOCUMENT'S AUTHORSHIP ON THE DIGITAL MEDIA. PRINTED REPRESENTATIONS OR PORTABLE DOCUMENT FORMAT OF THE DRAWINGS AND SPECIFICATIONS ISSUED SHALL BE THE ONLY RECORD COPIES OF ALLEN & MAJOR ASSOCIATES, INC.'S WORK PRODUCT.

DRAWING TITLE:

DETAILS

SHEET No.

C-508

Copyright©2020 Allen & Major Associates, Inc.
All Rights Reserved

M:\PROJECTS\2518-01\CIVIL\DRAWINGS\CURRENT\C-2518-01_DETAILS.DWG

NOT USED
NOT TO SCALE
7

NOT USED
NOT TO SCALE
6

NOT USED
NOT TO SCALE
5

NOT USED
NOT TO SCALE
4

NOT USED
NOT TO SCALE
3

NOT USED
NOT TO SCALE
2

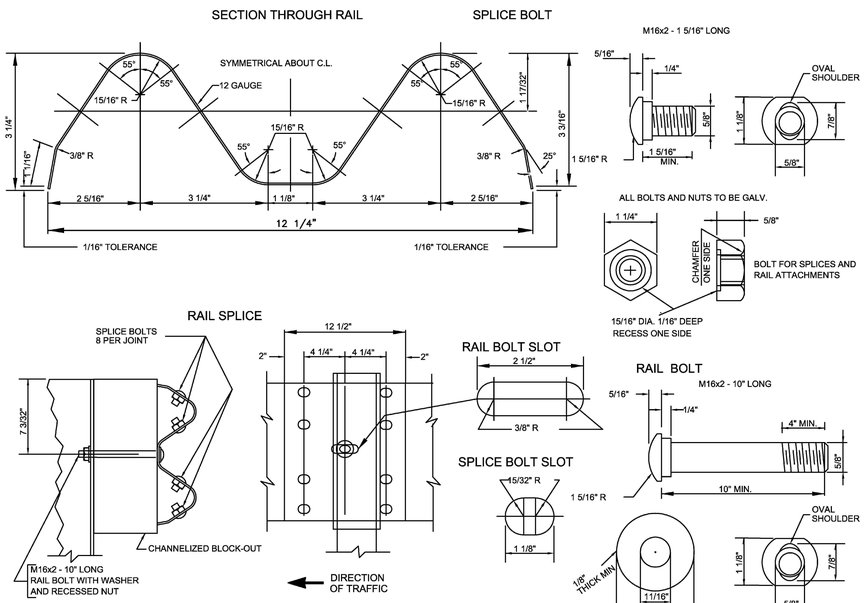

NOTES:
1. FOR POST AND BLOCK-OUT DETAILS SEE E 401.8.0 AND E 401.20.0
2. LAP DOWNSTREAM IN DIRECTION OF TRAFFIC.
3. ALL STEEL TO BE COR-TEN.

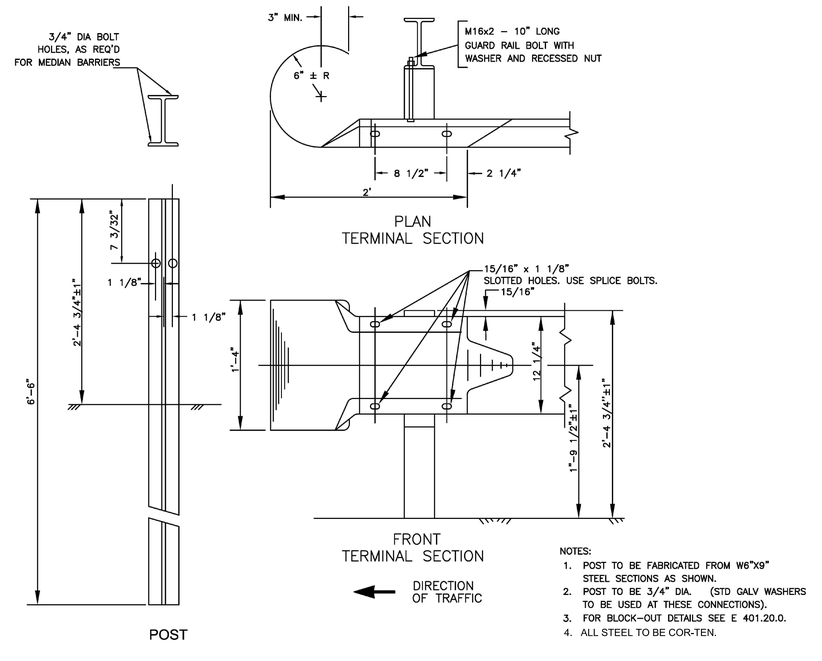

NOTES:
1. POST TO BE FABRICATED FROM W6"X9" STEEL SECTIONS AS SHOWN.
2. POST TO BE 3/4" DIA. (STD GALV WASHERS TO BE USED AT THESE CONNECTIONS).
3. FOR BLOCK–OUT DETAILS SEE E 401.20.0.
4. ALL STEEL TO BE COR-TEN.

STEEL W BEAM HIGHWAY GUARD RAIL, POSTS, AND TERMINAL SECTION
NOT TO SCALE
1

APPROVED BY
TOWN OF ROCHESTER PLANNING BOARD

DATE SUBMITTED: _____

DATE ENDORSED: _____

DATE APPROVED: _____

_____

_____

_____

_____

_____

_____

TOWN OF ROCHESTER PLANNING BOARD

ISSUED FOR REVIEW
10-25-2019 REV. 6:12-01-2020

COMMONWEALTH OF MASSACHUSETTS
PHILIP L CORDEIRO
CIVIL
NO. 47083
REGISTERED PROFESSIONAL ENGINEER

Philip L Cordeiro
c=US, o=Allen and Major Associates Inc., ou=A01410C0000017598BB4F D00002012, cn=Philip L Cordeiro
2021.01.26 14:32:48 -05'00'

PROFESSIONAL ENGINEER FOR
ALLEN & MAJOR ASSOCIATES, INC.

REV	DATE	DESCRIPTION
6	12-01-2020	PER PLANNING BOARD PEER REVIEW COMMENTS
5	10-23-2020	PER PLANNING BOARD PEER REVIEW COMMENTS
4	10-02-2020	PER PLANNING BOARD PEER REVIEW COMMENTS
3	07-31-2020	PER PLANNING BOARD PEER REVIEW COMMENTS
2	07-09-2020	PER NOI PEER REVIEW COMMENTS
1	05-18-2020	PER NOI PEER REVIEW COMMENTS

APPLICANT\OWNER:
STEEN
REALTY AND DEVELOPMENT CORPORATION
3 LEDGEWOOD BOULEVARD DARTMOUTH, MA 02747

PROJECT:
ROCHESTER CROSSROADS
SMART GROWTH DEVELOPMENT
CRANBERRY HIGHWAY
ROCHESTER, MA

PROJECT NO.	2518-01	DATE:	10-25-2019
SCALE:	AS SHOWN	DWG. NAME:	C2518-01_
DESIGNED BY:	PGM/CMcC	CHECKED BY:	PC

PREPARED BY:
ALLEN & MAJOR ASSOCIATES, INC.
civil engineering ◆ land surveying
environmental consulting ◆ landscape architecture
www.allenmajor.com
10 MAIN STREET
LAKEVILLE MA 02347
TEL: (508) 923-1010
FAX: (508) 923-6309
WOBURN, MA ◆ LAKEVILLE, MA ◆ MANCHESTER, NH

THIS DRAWING HAS BEEN PREPARED IN DIGITAL FORMAT. CLIENT/CLIENT'S REPRESENTATIVE OR CONSULTANTS MAY BE PROVIDED COPIES OF DRAWINGS AND SPECIFICATIONS FOR HIS/HER INFORMATION AND/OR SPECIFIC USE ON THIS PROJECT. DUE TO THE POTENTIAL THAT THE PROVIDED INFORMATION MAY BE MODIFIED UNINTENTIONALLY OR OTHERWISE, ALLEN & MAJOR ASSOCIATES, INC. MAY REMOVE ALL INDICATION OF THE DOCUMENT'S AUTHORSHIP ON THE DIGITAL MEDIA. PRINTED REPRESENTATIONS OR PORTABLE DOCUMENT FORMAT OF THE DRAWINGS AND SPECIFICATIONS ISSUED SHALL BE THE ONLY RECORD COPIES OF ALLEN & MAJOR ASSOCIATES, INC.'S WORK PRODUCT.

DRAWING TITLE: DETAILS

SHEET No. C-509

Copyright©2020 Allen & Major Associates, Inc.
All Rights Reserved

M:\PROJECTS\2518-01\CIVIL\DRAWINGS\CURRENT\C-2518-01_DETAILS.DWG

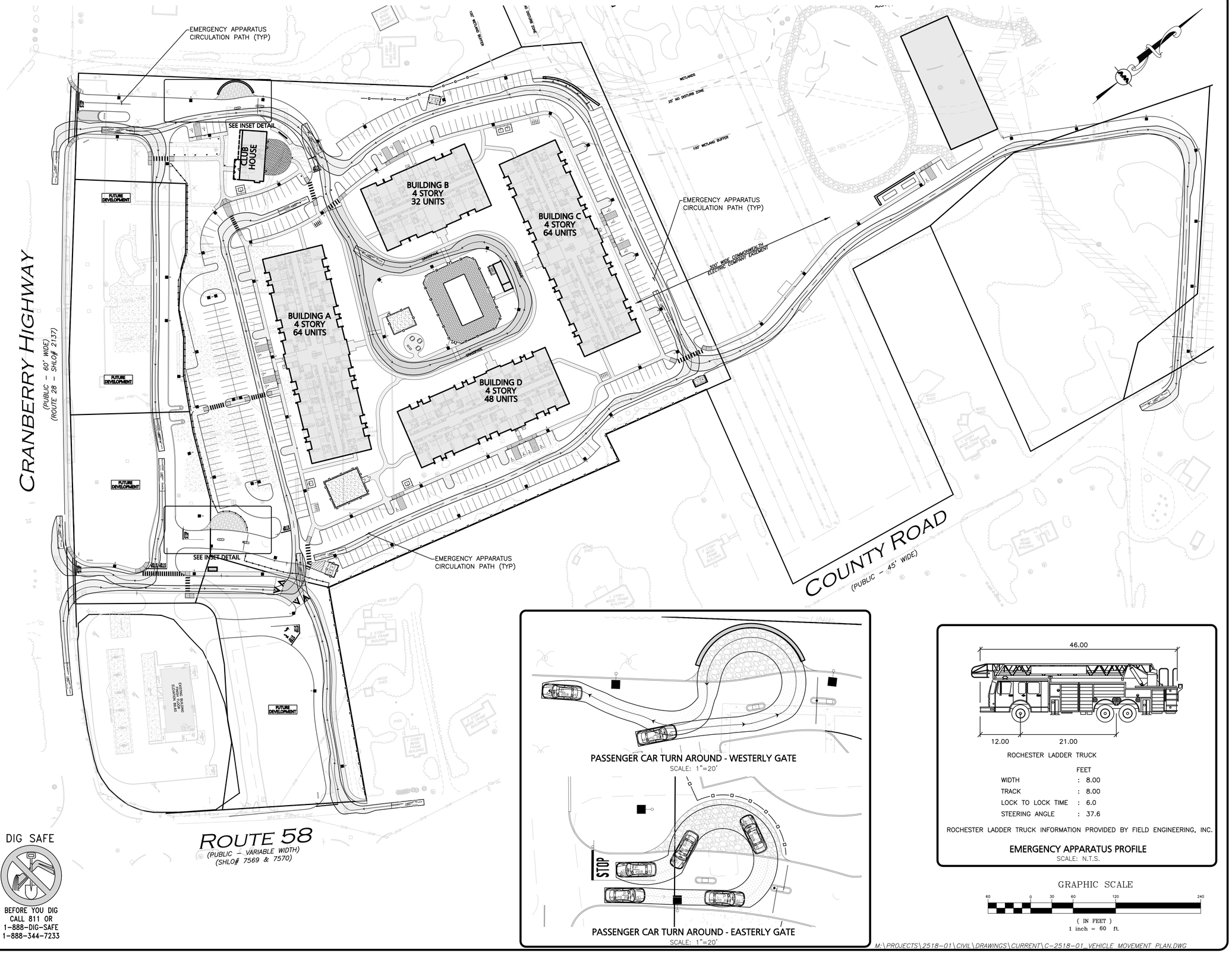

DIG SAFE

BEFORE YOU DIG
CALL 811 OR
1-888-DIG-SAFE
1-888-344-7233

ROCHESTER LADDER TRUCK

	FEET
WIDTH	: 8.00
TRACK	: 8.00
LOCK TO LOCK TIME	: 6.0
STEERING ANGLE	: 37.6

ROCHESTER LADDER TRUCK INFORMATION PROVIDED BY FIELD ENGINEERING, INC.

EMERGENCY APPARATUS PROFILE

SCALE: N.T.S.

GRAPHIC SCALE

60 0 30 60 120 240

(IN FEET)
1 inch = 60 ft.

M:\PROJECTS\2518-01\CIVIL\DRAWINGS\CURRENT\C-2518-01_VEHICLE MOVEMENT PLAN.DWG

APPROVED BY
TOWN OF ROCHESTER PLANNING BOARD

DATE SUBMITTED: _____

DATE ENDORSED: _____

DATE APPROVED: _____

_____

_____

_____

_____

_____

_____

TOWN OF ROCHESTER PLANNING BOARD

ISSUED FOR REVIEW
10-25-2019 REV. 6:12-01-2020

COMMONWEALTH OF MASSACHUSETTS
PHILIP L CORDEIRO
CIVIL
NO. 47083
REGISTERED PROFESSIONAL ENGINEER

Philip L Cordeiro
c=US, o=Allen and Major Associates Inc., ou=A01410C0000017598BB4FD00002012, cn=Philip L Cordeiro
2021.01.26 14:33:16 -05'00'

PROFESSIONAL ENGINEER FOR
ALLEN & MAJOR ASSOCIATES, INC.

REV	DATE	DESCRIPTION
6	12-01-2020	PER PLANNING BOARD PEER REVIEW COMMENTS
5	10-23-2020	PER PLANNING BOARD PEER REVIEW COMMENTS
4	10-02-2020	PER PLANNING BOARD PEER REVIEW COMMENTS
3	07-31-2020	PER PLANNING BOARD PEER REVIEW COMMENTS
2	07-09-2020	PER NOI PEER REVIEW COMMENTS
1	05-18-2020	PER NOI PEER REVIEW COMMENTS

APPLICANT\OWNER:

STEEN
REALTY AND DEVELOPMENT CORPORATION
3 LEDGEWOOD BOULEVARD DARTMOUTH, MA 02747

PROJECT:

ROCHESTER CROSSROADS
SMART GROWTH DEVELOPMENT
CRANBERRY HIGHWAY
ROCHESTER, MA

PROJECT NO.	2518-01	DATE:	10-25-2019
SCALE:	60'	DWG. NAME:	C2518-01_
DESIGNED BY:	PGM/CMcC	CHECKED BY:	PC

PREPARED BY:

ALLEN & MAJOR ASSOCIATES, INC.
civil engineering ◆ land surveying
environmental consulting ◆ landscape architecture
www.allenmajor.com
10 MAIN STREET
LAKEVILLE MA 02347
TEL: (508) 923-1010
FAX: (508) 923-6309
WOBURN, MA ◆ LAKEVILLE, MA ◆ MANCHESTER, NH

THIS DRAWING HAS BEEN PREPARED IN DIGITAL FORMAT. CLIENT/CLIENT'S REPRESENTATIVE OR CONSULTANTS MAY BE PROVIDED COPIES OF DRAWINGS AND SPECIFICATIONS FOR HIS/HER INFORMATION AND/OR SPECIFIC USE ON THIS PROJECT. DUE TO THE POTENTIAL THAT THE PROVIDED INFORMATION MAY BE MODIFIED UNINTENTIONALLY OR OTHERWISE, ALLEN & MAJOR ASSOCIATES, INC. MAY REMOVE ALL INDICATION OF THE DOCUMENT'S AUTHORSHIP ON THE DIGITAL MEDIA. PRINTED REPRESENTATIONS OR PORTABLE DOCUMENT FORMAT OF THE DRAWINGS AND SPECIFICATIONS ISSUED SHALL BE THE ONLY RECORD COPIES OF ALLEN & MAJOR ASSOCIATES, INC.'S WORK PRODUCT.

DRAWING TITLE:

VEHICLE MOVEMENT PLAN

SHEET No.
C-601

Copyright©2020 Allen & Major Associates, Inc.
All Rights Reserved

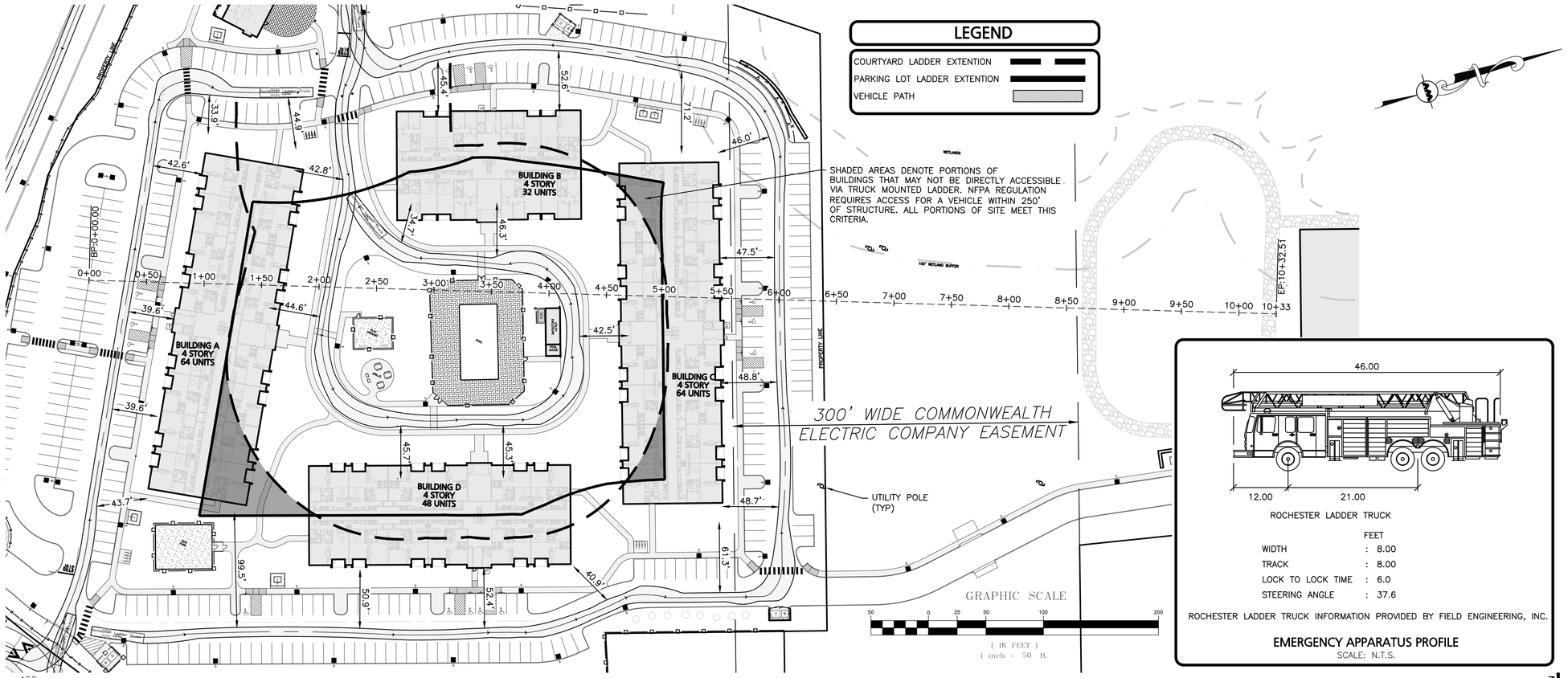

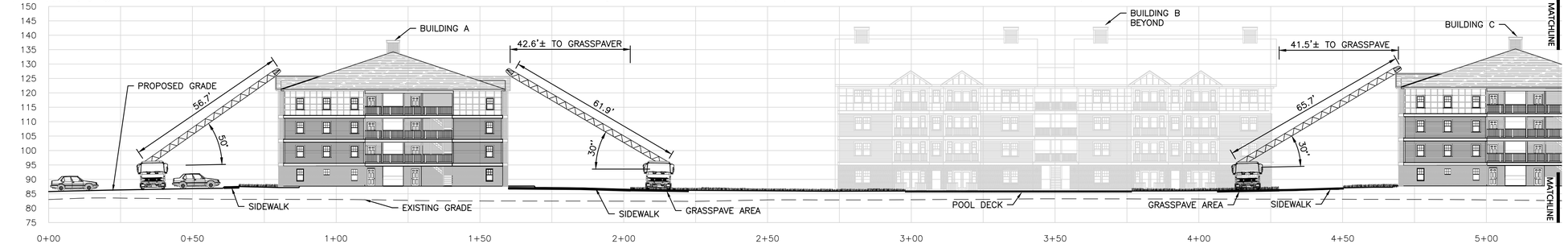

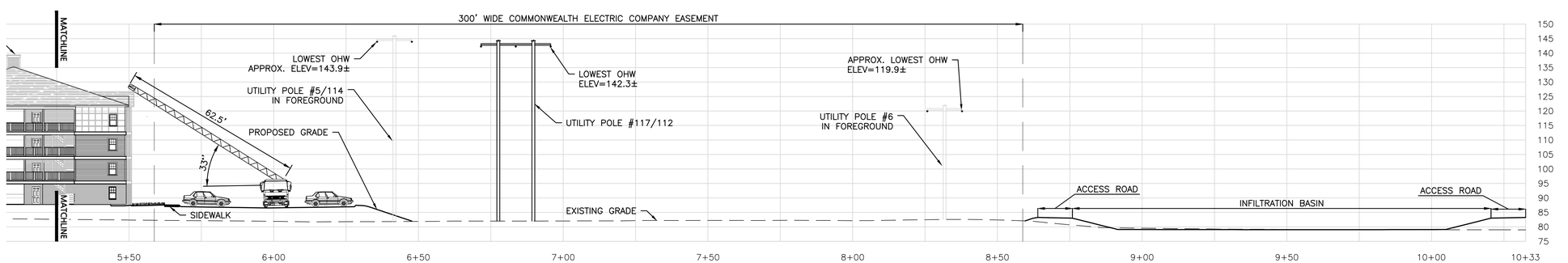

DIG SAFE

BEFORE YOU DIG CALL 811 OR 1-888-DIG-SAFE 1-888-344-7233

M:\PROJECTS\2518-01\CIVIL\DRAWINGS\CURRENT\C-2518-01_EMERGENCY APPARATUS PROFILE.DWG

APPROVED BY
TOWN OF ROCHESTER PLANNING BOARD

DATE SUBMITTED: _____

DATE ENDORSED: _____

DATE APPROVED: _____

_____

_____

_____

_____

_____

_____

_____

TOWN OF ROCHESTER PLANNING BOARD

ISSUED FOR REVIEW
10-25-2019 REV. 6:12-01-2020

COMMONWEALTH OF MASSACHUSETTS
PHILIP L CORDEIRO
CIVIL
NO. 47083
REGISTERED PROFESSIONAL ENGINEER

Philip L Cordeiro
c=US, o=Allen and Major Associates Inc., ou=A01410C000001759B8B4FD00002012, cn=Philip L Cordeiro
2021.01.26 14:33:47 -05'00'

PROFESSIONAL ENGINEER FOR ALLEN & MAJOR ASSOCIATES, INC.

REV	DATE	DESCRIPTION
6	12-01-2020	PER PLANNING BOARD PEER REVIEW COMMENTS
5	10-23-2020	PER PLANNING BOARD PEER REVIEW COMMENTS
4	10-02-2020	PER PLANNING BOARD PEER REVIEW COMMENTS
3	07-31-2020	PER PLANNING BOARD PEER REVIEW COMMENTS
2	07-09-2020	PER NOI PEER REVIEW COMMENTS
1	05-18-2020	PER NOI PEER REVIEW COMMENTS

APPLICANT\OWNER:

STEEN REALTY AND DEVELOPMENT CORPORATION

3 LEDGEWOOD BOULEVARD DARTMOUTH, MA 02747

PROJECT:

ROCHESTER CROSSROADS
SMART GROWTH DEVELOPMENT
CRANBERRY HIGHWAY
ROCHESTER, MA

PROJECT NO.	2518-01	DATE:	10-25-2019
SCALE:	1" = 20'	DWG. NAME:	C2518-01_
DESIGNED BY:	PGM/CMcC	CHECKED BY:	PC

PREPARED BY:

ALLEN & MAJOR ASSOCIATES, INC.
civil engineering ◆ land surveying
environmental consulting ◆ landscape architecture
www.allenmajor.com
10 MAIN STREET
LAKEVILLE MA 02347
TEL: (508) 923-1010
FAX: (508) 923-6309
WOBURN, MA ◆ LAKEVILLE, MA ◆ MANCHESTER, NH

THIS DRAWING HAS BEEN PREPARED IN DIGITAL FORMAT. CLIENT/CLIENT'S REPRESENTATIVE OR CONSULTANTS MAY BE PROVIDED COPIES OF DRAWINGS AND SPECIFICATIONS FOR HIS/HER INFORMATION AND/OR SPECIFIC USE ON THIS PROJECT. DUE TO THE POTENTIAL THAT THE PROVIDED INFORMATION MAY BE MODIFIED UNINTENTIONALLY OR OTHERWISE, ALLEN & MAJOR ASSOCIATES, INC. MAY REMOVE ALL INDICATION OF THE DOCUMENTS AUTHORSHIP ON THE DIGITAL MEDIA. PRINTED REPRESENTATIONS OR PORTABLE DOCUMENT FORMAT OF THE DRAWINGS AND SPECIFICATIONS ISSUED SHALL BE THE ONLY RECORD COPIES OF ALLEN & MAJOR ASSOCIATES, INC.'S WORK PRODUCT.

DRAWING TITLE:
EMERGENCY APPARATUS PROFILE PLAN

SHEET No.
C-602

Copyright©2020 Allen & Major Associates, Inc. All Rights Reserved

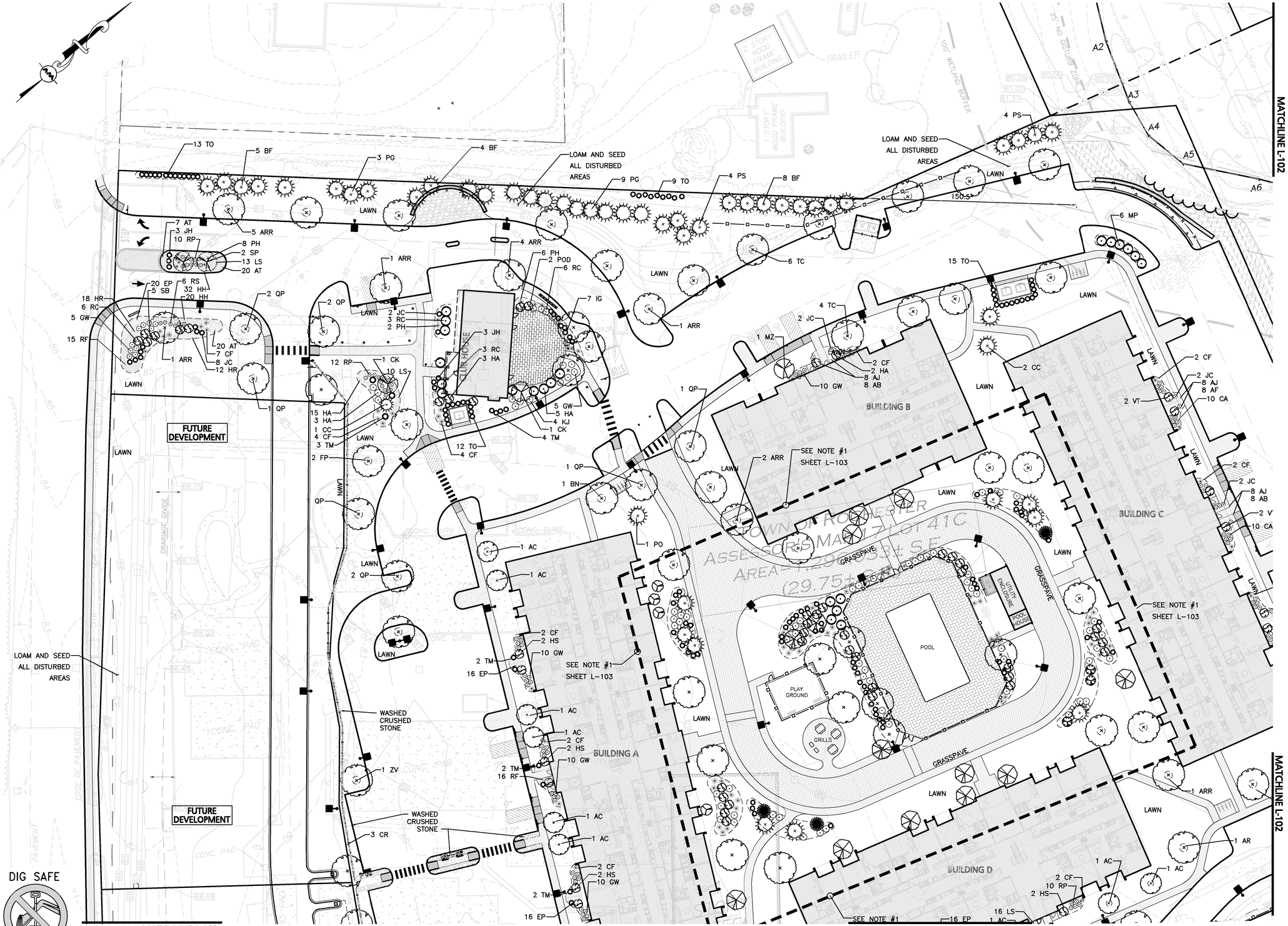

DIG SAFE

BEFORE YOU DIG CALL 811 OR 1-888-DIG-SAFE 1-888-344-7233

NOTES:

1) SEE SHEET L-103 FOR LEGEND.

GRAPHIC SCALE

30 0 15 30 60 120

(IN FEET)
1 inch = 30 ft.

M:\PROJECTS\2518-01\CIVIL\DRAWINGS\CURRENT\C-2518-01_LANDSCAPING.DWG

APPROVED BY
TOWN OF ROCHESTER PLANNING BOARD

DATE SUBMITTED: _____

DATE ENDORSED: _____

DATE APPROVED: _____

_____

_____

_____

_____

_____

_____

_____

TOWN OF ROCHESTER PLANNING BOARD

ISSUED FOR REVIEW
10-25-2019 REV. 6:12-01-2020

COMMONWEALTH OF MASSACHUSETTS
PHILIP L CORDEIRO
CIVIL
NO. 47083
REGISTERED PROFESSIONAL ENGINEER

Philip L Cordeiro
c=US, o=Allen and Major Associates Inc., ou=A01410C0000017598B84F D00002012, cn=Philip L Cordeiro
2021.01.26 14:34:14 -05'00'

PROFESSIONAL ENGINEER FOR
ALLEN & MAJOR ASSOCIATES, INC.

REV	DATE	DESCRIPTION
6	12-01-2020	PER PLANNING BOARD PEER REVIEW COMMENTS
5	10-23-2020	PER PLANNING BOARD PEER REVIEW COMMENTS
4	10-02-2020	PER PLANNING BOARD PEER REVIEW COMMENTS
3	07-31-2020	PER PLANNING BOARD PEER REVIEW COMMENTS
2	07-09-2020	PER NOI PEER REVIEW COMMENTS
1	05-18-2020	PER NOI PEER REVIEW COMMENTS

APPLICANT\OWNER:

STEEN
REALTY AND DEVELOPMENT CORPORATION
3 LEDGEWOOD BOULEVARD DARTMOUTH, MA 02747

PROJECT:

ROCHESTER CROSSROADS
SMART GROWTH DEVELOPMENT
CRANBERRY HIGHWAY
ROCHESTER, MA

PROJECT NO.	2518-01	DATE:	10-25-2019
SCALE:	1" = 30'	DWG. NAME:	C2518-01_
DESIGNED BY:	PGM/CMcC	CHECKED BY:	PC

PREPARED BY:

ALLEN & MAJOR ASSOCIATES, INC.
civil engineering ◆ land surveying
environmental consulting ◆ landscape architecture
www.allenmajor.com
10 MAIN STREET
LAKEVILLE MA 02347
TEL: (508) 523-1010
FAX: (508) 523-6309
WOBURN, MA ◆ LAKEVILLE, MA ◆ MANCHESTER, NH

THIS DRAWING HAS BEEN PREPARED IN DIGITAL FORMAT. CLIENT/CLIENTS REPRESENTATIVE OR CONSULTANTS MAY BE PROVIDED COPIES OF DRAWINGS AND SPECIFICATIONS FOR HIS/HER INFORMATION AND/OR SPECIFIC USE ON THIS PROJECT. DUE TO THE POTENTIAL THAT THE PROVIDED INFORMATION MAY BE MODIFIED UNINTENTIONALLY OR OTHERWISE, ALLEN & MAJOR ASSOCIATES, INC. MAY REMOVE ALL INDICATION OF THE DOCUMENT'S AUTHORSHIP ON THE DIGITAL MEDIA. PRINTED REPRESENTATIONS OR PORTABLE DOCUMENT FORMAT OF THE DRAWINGS AND SPECIFICATIONS ISSUED SHALL BE THE ONLY RECORD COPIES OF ALLEN & MAJOR ASSOCIATES, INC.'S WORK PRODUCT.

DRAWING TITLE:

LANDSCAPING PLAN

SHEET No.

L-101

Copyright©2020 Allen & Major Associates, Inc. All Rights Reserved

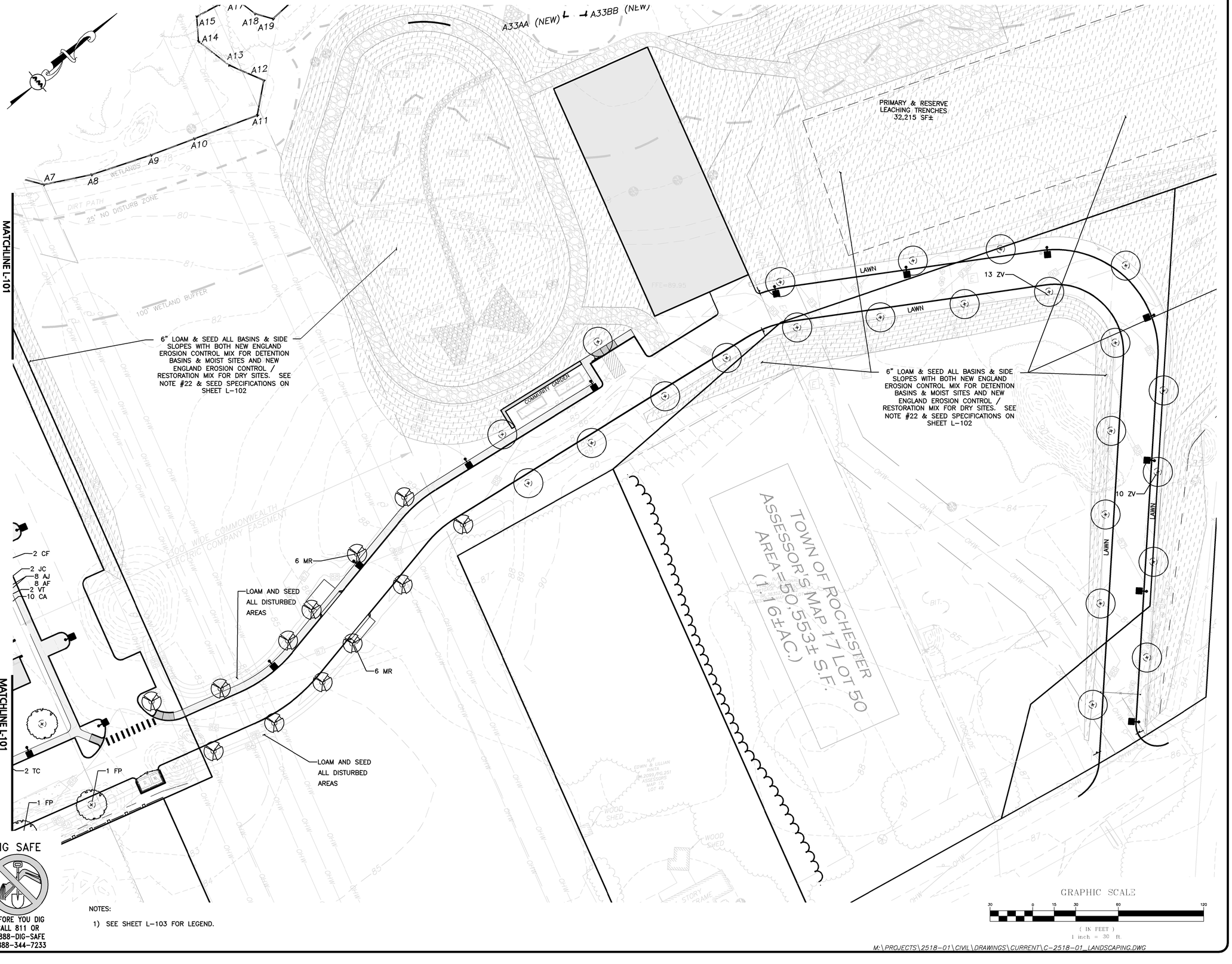

DIG SAFE

BEFORE YOU DIG
CALL 811 OR
1-888-DIG-SAFE
1-888-344-7233

NOTES:

1) SEE SHEET L-103 FOR LEGEND.

M:\PROJECTS\2518-01\CIVIL\DRAWINGS\CURRENT\C-2518-01_LANDSCAPING.DWG

APPROVED BY
TOWN OF ROCHESTER PLANNING BOARD

DATE SUBMITTED: _____

DATE ENDORSED: _____

DATE APPROVED: _____

_____

_____

_____

_____

_____

_____

TOWN OF ROCHESTER PLANNING BOARD

ISSUED FOR REVIEW
10-25-2019 REV. 6:12-01-2020

COMMONWEALTH OF MASSACHUSETTS
PHILIP L. CORDEIRO
CIVIL
NO. 47083
REGISTERED PROFESSIONAL ENGINEER

Philip L Cordeiro
c=US, o=Allen and Major Associates Inc., ou=A01410C0000017598BB4F D00002012, cn=Philip L Cordeiro
2021.01.26 14:34:38 -05'00'

PROFESSIONAL ENGINEER FOR
ALLEN & MAJOR ASSOCIATES, INC.

REV	DATE	DESCRIPTION
6	12-01-2020	PER PLANNING BOARD PEER REVIEW COMMENTS
5	10-23-2020	PER PLANNING BOARD PEER REVIEW COMMENTS
4	10-02-2020	PER PLANNING BOARD PEER REVIEW COMMENTS
3	07-31-2020	PER PLANNING BOARD PEER REVIEW COMMENTS
2	07-09-2020	PER NOI PEER REVIEW COMMENTS
1	05-18-2020	PER NOI PEER REVIEW COMMENTS

APPLICANT\OWNER:

STEEN
REALTY AND DEVELOPMENT CORPORATION
3 LEDGEWOOD BOULEVARD DARTMOUTH, MA 02747

PROJECT:

ROCHESTER CROSSROADS
SMART GROWTH DEVELOPMENT
CRANBERRY HIGHWAY
ROCHESTER, MA

PROJECT NO.	2518-01	DATE:	10-25-2019
SCALE:	1" = 30'	DWG. NAME:	C2518-01_
DESIGNED BY:	PGM/CMcC	CHECKED BY:	PC

PREPARED BY:

ALLEN & MAJOR ASSOCIATES, INC.
civil engineering ◆ land surveying
environmental consulting ◆ landscape architecture
www.allenmajor.com
10 MAIN STREET
LAKEVILLE MA 02347
TEL: (508) 523-1010
FAX: (508) 523-6309

WOBURN, MA ◆ LAKEVILLE, MA ◆ MANCHESTER, NH

THIS DRAWING HAS BEEN PREPARED IN DIGITAL FORMAT. CLIENT/CLIENT'S REPRESENTATIVE OR CONSULTANTS MAY BE PROVIDED COPIES OF DRAWINGS AND SPECIFICATIONS FOR HIS/HER INFORMATION AND/OR SPECIFIC USE ON THIS PROJECT. DUE TO THE POTENTIAL THAT THE PROVIDED INFORMATION MAY BE MODIFIED UNINTENTIONALLY OR OTHERWISE, ALLEN & MAJOR ASSOCIATES, INC. MAY REMOVE ALL INDICATION OF THE DOCUMENT'S AUTHORSHIP ON THE DIGITAL MEDIA. PRINTED REPRESENTATIONS OR PORTABLE DOCUMENT FORMAT OF THE DRAWINGS AND SPECIFICATIONS ISSUED SHALL BE THE ONLY RECORD COPIES OF ALLEN & MAJOR ASSOCIATES, INC.'S WORK PRODUCT.

DRAWING TITLE:

LANDSCAPING PLAN

SHEET No.

L-102

Copyright©2020 Allen & Major Associates, Inc.
All Rights Reserved

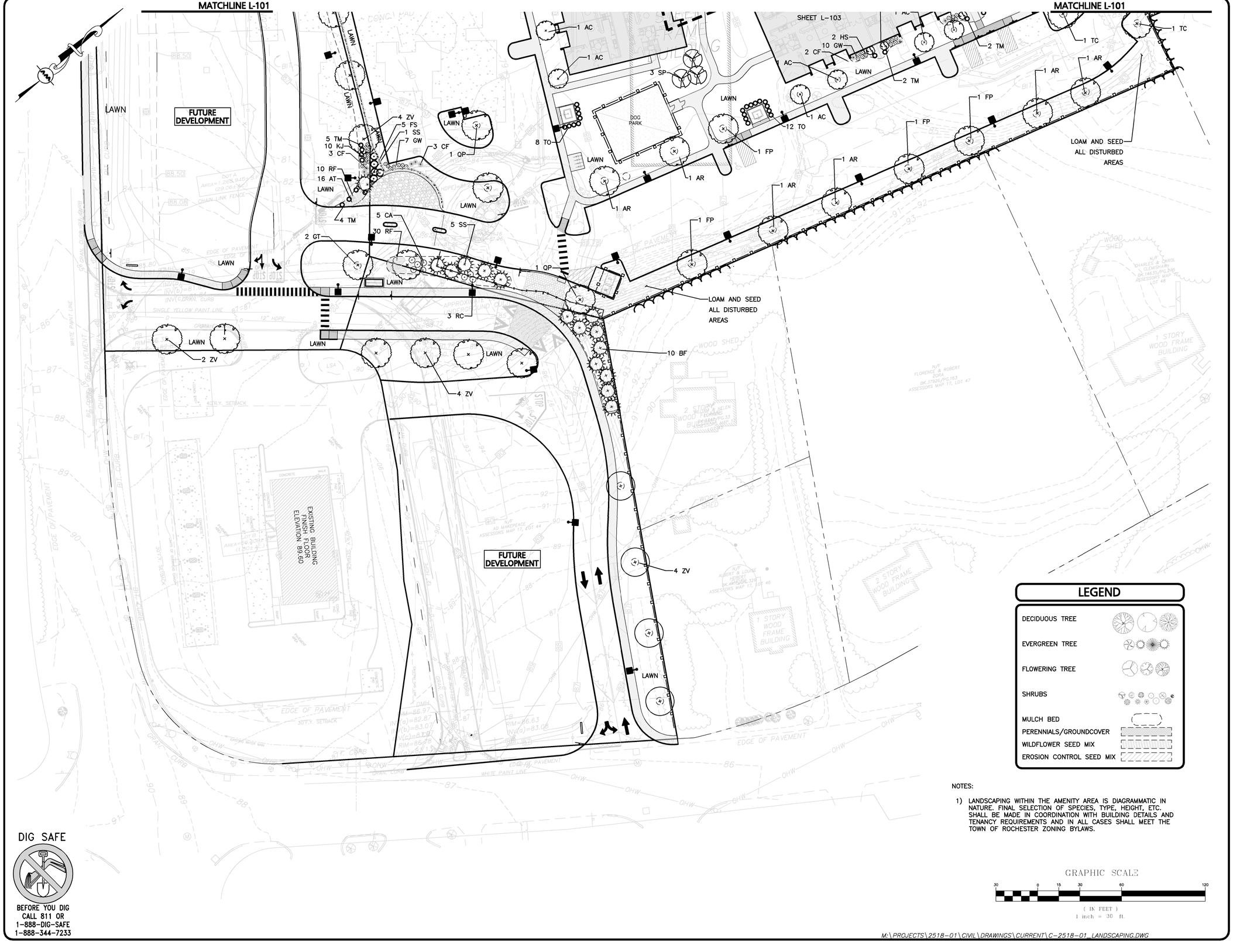

LEGEND

- DECIDUOUS TREE
- EVERGREEN TREE
- FLOWERING TREE
- SHRUBS
- MULCH BED
- PERENNIALS/GROUNDCOVER
- WILDFLOWER SEED MIX
- EROSION CONTROL SEED MIX

NOTES:

1) LANDSCAPING WITHIN THE AMENITY AREA IS DIAGRAMMATIC IN NATURE. FINAL SELECTION OF SPECIES, TYPE, HEIGHT, ETC. SHALL BE MADE IN COORDINATION WITH BUILDING DETAILS AND TENANCY REQUIREMENTS AND IN ALL CASES SHALL MEET THE TOWN OF ROCHESTER ZONING BYLAWS.

GRAPHIC SCALE

30 0 15 30 60 120

(IN FEET)
1 inch = 30 ft.

DIG SAFE

BEFORE YOU DIG
CALL 811 OR
1-888-DIG-SAFE
1-888-344-7233

M:\PROJECTS\2518-01\CIVIL\DRAWINGS\CURRENT\C-2518-01_LANDSCAPING.DWG

APPROVED BY
TOWN OF ROCHESTER PLANNING BOARD

DATE SUBMITTED: _____

DATE ENDORSED: _____

DATE APPROVED: _____

_____

_____

_____

_____

_____

_____

TOWN OF ROCHESTER PLANNING BOARD

ISSUED FOR REVIEW
10-25-2019 REV. 6:12-01-2020

COMMONWEALTH OF MASSACHUSETTS
PHILIP L. CORDEIRO
CIVIL
NO. 47083
REGISTERED PROFESSIONAL ENGINEER

Philip L Cordeiro
c=US, o=Allen and Major Associates Inc., ou=A01410C0000017598BB4F D00002012, cn=Philip L Cordeiro
2021.01.26 14:35:03 -05'00'

PROFESSIONAL ENGINEER FOR
ALLEN & MAJOR ASSOCIATES, INC.

REV	DATE	DESCRIPTION
6	12-01-2020	PER PLANNING BOARD PEER REVIEW COMMENTS
5	10-23-2020	PER PLANNING BOARD PEER REVIEW COMMENTS
4	10-02-2020	PER PLANNING BOARD PEER REVIEW COMMENTS
3	07-31-2020	PER PLANNING BOARD PEER REVIEW COMMENTS
2	07-09-2020	PER NOI PEER REVIEW COMMENTS
1	05-18-2020	PER NOI PEER REVIEW COMMENTS

APPLICANT\OWNER:

STEEN
REALTY AND DEVELOPMENT CORPORATION
3 LEDGEWOOD BOULEVARD DARTMOUTH, MA 02747

PROJECT:

ROCHESTER CROSSROADS
SMART GROWTH DEVELOPMENT
CRANBERRY HIGHWAY
ROCHESTER, MA

PROJECT NO.	2518-01	DATE:	10-25-2019
SCALE:	1" = 30'	DWG. NAME:	C2518-01_
DESIGNED BY:	PGM/CMcC	CHECKED BY:	PC

PREPARED BY:

ALLEN & MAJOR ASSOCIATES, INC.
civil engineering ◆ land surveying
environmental consulting ◆ landscape architecture
www.allenmajor.com
10 MAIN STREET
LAKEVILLE MA 02347
TEL: (508) 523-1010
FAX: (508) 523-6309
WOBURN, MA ◆ LAKEVILLE, MA ◆ MANCHESTER, NH

THIS DRAWING HAS BEEN PREPARED IN DIGITAL FORMAT. CLIENT/CLIENT'S REPRESENTATIVE OR CONSULTANTS MAY BE PROVIDED COPIES OF DRAWINGS AND SPECIFICATIONS FOR HIS/HER INFORMATION AND/OR SPECIFIC USE ON THIS PROJECT. DUE TO THE POTENTIAL THAT THE PROVIDED INFORMATION MAY BE MODIFIED UNINTENTIONALLY OR OTHERWISE, ALLEN & MAJOR ASSOCIATES, INC. MAY REMOVE ALL INDICATION OF THE DOCUMENT'S AUTHORSHIP ON THE DIGITAL MEDIA. PRINTED REPRESENTATIONS OR PORTABLE DOCUMENT FORMAT OF THE DRAWINGS AND SPECIFICATIONS ISSUED SHALL BE THE ONLY RECORD COPIES OF ALLEN & MAJOR ASSOCIATES, INC.'S WORK PRODUCT.

DRAWING TITLE:

LANDSCAPING PLAN

SHEET No.

L-103

Copyright©2020 Allen & Major Associates, Inc.
All Rights Reserved

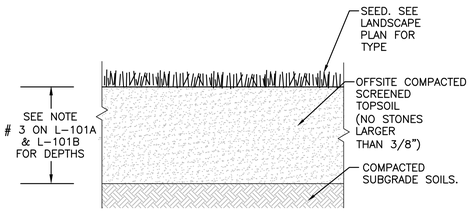

TEXTURE CLASS	% OF TOTAL WEIGHT
SAND	45% – 65%
SILT	15% – 35%
CLAY	5% – 20%

SIEVE	% PASSING
3/8"	100
NO. 4	85–100
NO. 40	60–85
NO. 100	38–60
NO. 200	10–35
20 um	LESS THAN 5%

NOTES:
1. TOP OF LOAM (TOPSOIL) IS FINISH GRADE.
2. ALL TOPSOIL SHALL BE COMPOSED OF A NATURAL, FERTILE, FRIABLE SOIL TYPICAL OF CULTIVATED TOPSOILS OF THE LOCALITY. ALL TOPSOIL SHALL BE SUITABLE FOR THE GERMINATION OF SEEDS AND SUPPORT OF VEGETATIVE GROWTH, WITH ADDITIVES, IF REQUIRED, TO ACHIEVE PARTICLE DISTRIBUTION AND ORGANIC CONTENT BELOW. TOPSOIL SHALL BE TAKEN FROM AN OFFSITE WELL–DRAINED, ARIABLE SITE, FREE OF SUBSOIL, LARGE STONES, EARTH CLODS, STICKS, STUMPS, CLAY LUMPS, ROOTS, OTHER OBJECTIONABLE, EXTRANEOUS MATTER OR DEBRIS NOR CONTAIN TOXIC SUBSTANCES.
3. THE CONTRACTOR SHALL PROVIDE THE OWNER / LANDSCAPE ARCHITECT WITH TOPSOIL TEST RESULTS FOR APPROVAL PRIOR TO OBTAINING AND PLACING THE SOIL. IF ANY TOPSOIL IS PURCHASED OR PLACED PRIOR TO APPROVAL BY OWNER / LANDSCAPE ARCHITECT, IT IS AT CONTRACTORS RISK, AND IT CAN BE REMOVED AT NO ADDITIONAL COST TO THE OWNER. IF THE TOPSOIL DOES NOT FALL WITHIN THE REQUIRED SIEVE ANALYSIS, TEXTURAL CLASS, ORGANIC CONTENT, OR PH RANGE, IT SHALL BE ADJUSTED TO MEET THE SPECIFICATIONS THROUGH THE ADDITION OF SAND, COMPOST, LIMESTONE, OR ALUMINUM SULFATE TO BRING IT WITHIN THE SPECIFIED LIMITS AT NO ADDITIONAL COST TO THE OWNER.
4. ALL TOPSOIL SHALL HAVE A PH VALUE BETWEEN 5.5 AND 6.5. TOPSOIL SHALL CONTAIN BETWEEN 4% AND 8% ORGANIC MATTER OF TOTAL DRY WEIGHT AND SHALL CONFORM TO THE FOLLOWING GRADATION AND TEXTURE CLASS ABOVE.

TOPSOIL FOR LAWN, SEEDED AREAS, TREES, SHRUBS, & PERENNIALS (1)
NOT TO SCALE

NOTES:
1. ALL SHRUBS SHALL HAVE THE SAME RELATIONSHIP TO FINISH GRADE AFTER PLANTING AS THEY HAD AT THE ORIGINAL NURSERY SETTING. SET SHRUB 1"–2" ABOVE FINISH GRADE.
2. BACKFILL WITH PLANTING MIX. PLANT MIX TO BE: 50% NATIVE TOPSOIL, 20% COMPOST (LEAVES & ORGANIC MATERIAL, NO ASH) 20% PEAT MOSS, 10% SAND.
3. ADD MYCORRHIZA SOIL ADDITIVES AND SLOW RELEASE FERTILIZER WHEN PLANT HOLES ARE 50% FILLED AND WATER THOROUGHLY AT COMPLETION.
4. SHRUB BEDS TO HAVE 24" MIN. OF CONTINUOUS PLANTING SOIL.

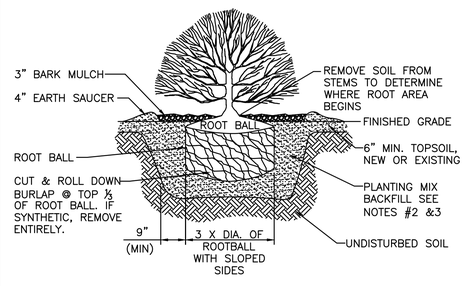

SHRUB PLANTING DETAIL (2)
NOT TO SCALE

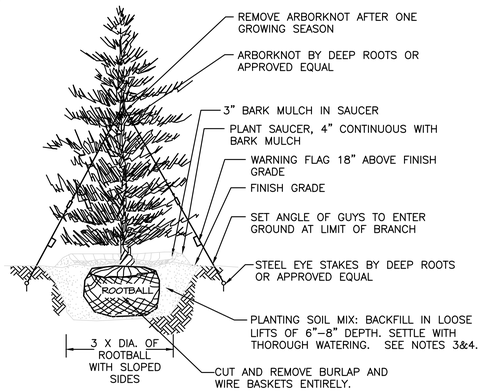

NOTES
1. TREES SHALL BEAR SAME RELATIONSHIP TO FINISH GRADE AS IT BORE TO NURSERY OR FIELD GRADE. ROOT FLARE SHALL BE 2" ABOVE FINISH GRADE. REMOVE SOIL FROM TRUNK FLARE OF TREE TO DETERMINE ACTUAL TOP OF ROOTBALL AREA.
2. INSTALL THREE GUYS PER TREE; EQUALLY SPACED AROUND BALL.
3. ATTACH GUYS AT 2/3 HEIGHT OF TREE.
4. BACKFILL WITH PLANTING MIX. PLANT MIX TO BE: 50% NATIVE TOPSOIL, 20% COMPOST (LEAVES & ORGANIC MATERIAL, NO ASH) 20% PEAT MOSS, 10% SAND.
5. ADD MYCORRHIZA SOIL ADDITIVES AND SLOW RELEASE FERTILIZER WHEN PLANT HOLES ARE 50% FILLED AND WATER THOROUGHLY AT COMPLETION.

EVERGREEN TREE DETAIL (3)
NOT TO SCALE

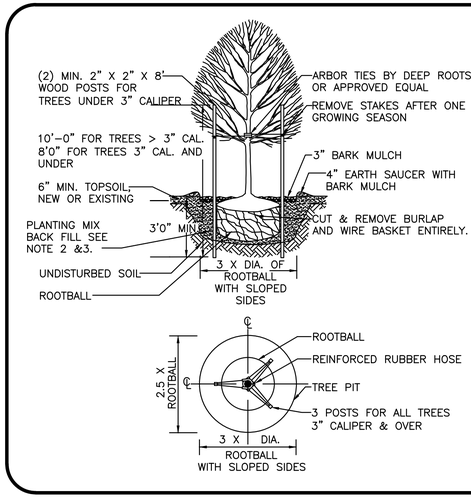

NOTES:
1. ALL TREES SHALL HAVE THE SAME RELATIONSHIP TO FINISH GRADE AFTER PLANTING AS THEY HAD AT THE ORIGINAL NURSERY SETTING. ROOT FLARE SHALL BE 2" ABOVE FINISH GRADE. REMOVE SOIL FROM TRUNK FLARE OF TREE TO DETERMINE ACTUAL ROOTBALL AREA.
2. BACKFILL WITH PLANTING MIX. PLANT MIX TO BE: 50% NATIVE TOPSOIL, 20% COMPOST (LEAVES & ORGANIC MATERIAL, NO ASH) 20% PEAT MOSS, 10% SAND.
3. ADD MYCORRHIZA SOIL ADDITIVES AND SLOW RELEASE FERTILIZER WHEN PLANT HOLES ARE 50% FILLED AND WATER THOROUGHLY AT COMPLETION.

DECIDUOUS TREE PLANTING DETAIL (4)
NOT TO SCALE

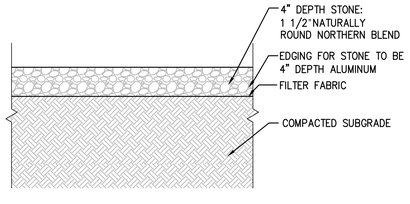

LANDSCAPE STONE DETAIL (5)
NOT TO SCALE

DIG SAFE
BEFORE YOU DIG CALL 811 OR 1–888–DIG–SAFE 1–888–344–7233

M:\PROJECTS\2518-01\CIVIL\DRAWINGS\CURRENT\C-2518-01_LANDSCAPING.DWG

APPROVED BY
TOWN OF ROCHESTER PLANNING BOARD

DATE SUBMITTED: _____

DATE ENDORSED: _____

DATE APPROVED: _____

_____

_____

_____

_____

_____

_____

TOWN OF ROCHESTER PLANNING BOARD

ISSUED FOR REVIEW
10-25-2019 REV. 6:12-01-2020

COMMONWEALTH OF MASSACHUSETTS
PHILIP L. CORDEIRO
CIVIL
NO. 47083
REGISTERED PROFESSIONAL ENGINEER

Philip L Cordeiro
c=US, o=Allen and Major Associates Inc., ou=A01410C0000175798BB4FD00002012, cn=Philip L Cordeiro
2021.01.26 14:35:28 -05'00'

PROFESSIONAL ENGINEER FOR ALLEN & MAJOR ASSOCIATES, INC.

REV	DATE	DESCRIPTION
6	12-01-2020	PER PLANNING BOARD PEER REVIEW COMMENTS
5	10-23-2020	PER PLANNING BOARD PEER REVIEW COMMENTS
4	10-02-2020	PER PLANNING BOARD PEER REVIEW COMMENTS
3	07-31-2020	PER PLANNING BOARD PEER REVIEW COMMENTS
2	07-09-2020	PER NOI PEER REVIEW COMMENTS
1	05-18-2020	PER NOI PEER REVIEW COMMENTS

APPLICANT\OWNER:
STEEN REALTY AND DEVELOPMENT CORPORATION
3 LEDGEWOOD BOULEVARD DARTMOUTH, MA 02747

PROJECT:
ROCHESTER CROSSROADS
SMART GROWTH DEVELOPMENT
CRANBERRY HIGHWAY
ROCHESTER, MA

PROJECT NO.	2518-01	DATE:	10-25-2019
SCALE:		DWG. NAME:	C2518-01_
DESIGNED BY:	PGM/CMcC	CHECKED BY:	PC

PREPARED BY:
ALLEN & MAJOR ASSOCIATES, INC.
civil engineering ◆ land surveying
environmental consulting ◆ landscape architecture
www.allenmajor.com
10 MAIN STREET
LAKEVILLE MA 02347
TEL: (508) 923-1010
FAX: (508) 923-6309
WOBURN, MA ◆ LAKEVILLE, MA ◆ MANCHESTER, NH

THIS DRAWING HAS BEEN PREPARED IN DIGITAL FORMAT. CLIENT/CLIENT'S REPRESENTATIVE OR CONSULTANTS MAY BE PROVIDED COPIES OF DRAWINGS AND SPECIFICATIONS FOR HIS/HER INFORMATION AND/OR SPECIFIC USE ON THIS PROJECT. DUE TO THE POTENTIAL THAT THE PROVIDED INFORMATION MAY BE MODIFIED UNINTENTIONALLY OR OTHERWISE, ALLEN & MAJOR ASSOCIATES, INC. MAY REMOVE ALL INDICATION OF THE DOCUMENT'S AUTHORSHIP ON THE DIGITAL MEDIA. PRINTED REPRESENTATIONS OR PORTABLE DOCUMENT FORMAT OF THE DRAWINGS AND SPECIFICATIONS ISSUED SHALL BE THE ONLY RECORD COPIES OF ALLEN & MAJOR ASSOCIATES, INC.'S WORK PRODUCT.

DRAWING TITLE:
LANDSCAPING PLAN

SHEET No.
L-104

Copyright©2020 Allen & Major Associates, Inc.
All Rights Reserved

ADDITIONAL SEED MIX SPECIFICATIONS FOR DETENTION BASINS, AND ALL SLOPE AREAS:

(BY NEW ENGLAND WETLAND PLANTS INC)
EROSION CONTROL/RESTORATION MIX FOR DETENTION BASINS AND MOIST SITES
(SEE A&M NOTE #22 FOR APPLICATION RATE OF SEED MIXES):

A.	ELYMUS VIRGINICUS	VIRGINIA WILD RYE
B.	FESTUCA RUBRA	CREEPING RED FESCUE
C.	SCHIZACHYRIUM SCOPARIUM	LITTLE BLUESTEM
D.	ANDROPOGON GERARDII	BIG BLUESTEM
E.	PANICUM VIRGATUM	SWITCH GRASS
F.	VERBENA HASTATA	BLUE VERVAIN
G.	AGROSTIS SCABRA	ROUGH BENTGRASS
H.	ASTER NOVAE–ANGLIAE	NEW ENGLAND ASTER
I.	EUPATORIUM MACULATUM	SPOTTED JOE PYE WEED
J.	EUPATORIUM PERFOLIATUM	BONESET
K.	JUNCUS EFFUSUS	SOFT RUSH
L.	SCIRPUS CYPERINUS	WOOL GRASS

GENERAL NOTES:

1. THE LOCATIONS OF EXISTING UNDERGROUND UTILITIES ARE SHOWN IN AN APPROXIMATE WAY ONLY AND HAVE NOT BEEN INDEPENDENTLY VERIFIED BY THE OWNER OR IT'S REPRESENTATIVE. THE CONTRACTOR SHALL DETERMINE THE EXACT LOCATION OF ALL EXISTING UTILITIES BEFORE COMMENCING WORK, AND AGREES TO BE FULLY RESPONSIBLE FOR ANY AND ALL DAMAGES WHICH MIGHT BE OCCASIONED BY THE CONTRACTOR'S FAILURE TO EXACTLY LOCATE AND PRESERVE ANY AND ALL UNDERGROUND UTILITIES.

2. THE INFORMATION SHOWN ON THIS PLAN IS THE SOLE PROPERTY OF ALLEN & MAJOR ASSOCIATES, INC. IT'S INTENDED USE IS TO PROVIDE INFORMATION. ANY ALTERATION, MISUSE, OR RECALCULATION OF INFORMATION OR DATA WITHOUT THE EXPRESSED, WRITTEN CONSENT OF ALLEN & MAJOR ASSOCIATES, INC. IS STRICTLY PROHIBITED.

3. ALL LANDSCAPED AREAS WITH SHRUBS, TREES, AND PERENNIALS TO HAVE 2 FEET MINIMUM DEPTH OF TOPSOIL. TWO FEET OF TOPSOIL AROUND TREES AND SHRUBS DOES NOT INCLUDE AMENDED PLANTING SOIL WITHIN TREE / SHRUB PIT FOR FULL DEPTH OF ROOTBALLS. SEE PLANTING DETAILS FOR PLANTING DEPTH AT SHRUBS AND TREES. ALL AREAS OF LOAM AND SEED TO HAVE 6" MINIMUM DEPTH OF TOPSOIL. TOPSOIL TO BE TESTED BY CONTRACTOR, AND APPROVED BY A&M PRIOR TO PURCHASE AND OR PLACEMENT. GENERAL CONTRACTOR, DEMOLITION CONTRACTOR, AND LANDSCAPE CONTRACTOR TO COORDINATE PROPER DEPTH OF EXISTING MATERIAL REMOVAL ACROSS SITE SO THAT 2 FEET MINIMUM AND 6" MINIMUM DEPTHS OF PROPOSED TOPSOIL NOTED ABOVE ARE MET AT NO ADDITIONAL COST TO OWNER. SEE TOPSOIL DETAIL.

LANDSCAPE NOTES

1. ALL WORK SHALL BE IN ACCORDANCE WITH THE REQUIREMENTS OF THE TOWN OF ROCHESTER, MA.
2. PLANTING PLAN IS DIAGRAMMATIC IN NATURE. FINAL PLACEMENT OF PLANTS TO BE APPROVED BY THE LANDSCAPE ARCHITECT IN THE FIELD.
3. THE CONTRACTOR SHALL BE RESPONSIBLE FOR CONTACTING ALL UTILITY COMPANIES, ANY PERMITTING AGENCIES, AND "DIG–SAFE" (1–888–344–7233) AT LEAST 72 HOURS IN ADVANCE OF ANY WORK THAT WILL REQUIRE EXCAVATION. CONTRACTOR SHALL NOTIFY THE OWNERS REPRESENTATIVE OF NAY CONFLICTS IN WRITING.
4. NO PLANT MATERIAL SHALL BE INSTALLED UNTIL ALL GRADING AND CONSTRUCTION HAS BEEN COMPLETED IN THE IMMEDIATE AREA, ANY TREES NOTED AS "SEAL OR SELECTED SPECIMEN" SHALL BE TAGGED AND SEALED BY THE LANDSCAPE ARCHITECT.
5. ALL TREES SHALL BE BALLED AND BURLAPPED (B&B) UNLESS OTHERWISE NOTED OR APPROVED BY THE OWNER'S REPRESENTATIVE AND LANDSCAPE ARCHITECT.
6. CONTRACTOR SHALL VERIFY QUANTITIES SHOWN ON PLANT LIST. QUANTITIES SHOWN ON PLANS SHALL GOVERN OVER PLANT LIST.
7. ANY PROPOSED PLANT SUBSTITUTIONS MUST BE APPROVED IN WRITING BY OWNER'S REPRESENTATIVE AND LANDSCAPE ARCHITECT.
8. ALL PLANT MATERIALS INSTALLED SHALL MEET THE GUIDELINES ESTABLISHED BY THE STANDARDS FOR NURSERY STOCK PUBLISHED BY THE AMERICAN ASSOCIATION OF NURSERYMEN.
9. ALL PLANT MATERIALS SHALL BE GUARANTEED FOR ONE YEAR FOLLOWING DATE OF ACCEPTANCE. ANY PLANT MATERIALS WHICH DIE WITHIN THE ONE YEAR PLANT GUARANTEE PERIOD WILL BE REPLACED BY THE LANDSCAPE CONTRACTOR AT NO ADDITIONAL COST TO THE OWNERS. OWNERS TO COORDINATE DIRECTLY WITH THE LANDSCAPE CONTRACTOR FOR REPLACEMENT PLANTINGS.
10. ALL DISTURBED AREAS NOT OTHERWISE NOTED SHALL RECEIVE 6" OF SUITABLE LOAM & SEED LAWNS WITH 3:1 OR STEEPER (GREATER) SLOPES SHALL BE PROTECTED WITH JUTE EROSION CONTROL NETTING.
11. ANY FALL TRANSPLANTING HAZARD PLANTS SHALL BE DUG IN THE SPRING AND STORED FOR FALL PLANTING.
12. TREES SHALL HAVE A MINIMUM CALIPER AS INDICATED ON THE PLANTING SCHEDULE TAKEN ONE FOOT ABOVE THE ROOT CROWN.
13. ALL PLANT BEDS AND TREE SAUCERS TO RECEIVE 3" OF PINE BARK MULCH. GROUND COVER AREAS SHALL RECEIVE 1" OF PINE BARK MULCH
14. ALL DECIDUOUS TREES ADJACENT TO WALKWAYS AND ROADWAYS SHALL HAVE A BRANCHING PATTERN TO ALLOW FOR A MINIMUM OF 7' OF CLEARANCE BETWEEN THE GROUND AND THE LOWEST BRANCH.
15. ALL TREE STAKES SHALL BE STAINED DARK BROWN.
16. CONTRACTOR RESPONSIBLE FOR WATERING, MAINTENANCE, FERTILIZING, AND RESEEDING OF LAWN BARE SPOTS UNTIL A UNIFORM STAND OF VEGETATION IS ESTABLISHED AND ACCEPTED.
17. ALL PARKING ISLANDS PLANTED WITH SHRUBS OR PERENNIALS SHALL HAVE 24" OF TOPSOIL. FINISH GRADE SHALL BE EQUAL TO THE TOP OF CURB.
18. SOIL SAMPLES, TESTS, AND SHOP DRAWINGS SHALL BE PROVIDED TO THE LANDSCAPE ARCHITECT OR THE OWNER FOR APPROVAL PRIOR TO CONSTRUCTION.
19. AN MINIMUM 18" WIDE BARRIER OF 1" GRAY OR TAN PEASTONE SHALL BE INSTALLED IN ALL PLANT BED WHICH ABUT THE BUILDINGS. NO MULCH IS ALLOWED WITHIN 18" OF ALL BUILDINGS PER THE LATEST EXECUTIVE OFFICE OF PUBLIC SAFETY AND SECURITY DEPARTMENT OF FIRE SERVICES REGULATION (527 CMR 17.00). INSTALL 6" DEEP OF PEASTONE WITH MIRAFI WEED FABRIC BENEATH AND STEEL EDGING BETWEEN THE PEASTONE AND ADJACENT MULCH BED. PROVIDE SHOP DRAWINGS TO A&M FOR APPROVAL PRIOR TO PURCHASE OF PEASTONE, MIRAFI WEED FABIRC & STEEL EDGING.
20. IF THERE IS NO PROPOSED IRRIGATION SYSTEM, AFTER PLANTINGS & LAWNS & SEEDED AREAS HAVE BEEN INSTALLED, LANDSCAPE CONTRACTOR RESPONSIBLE TO TEMPORARILY WATER ALL INSTALLED PLANTINGS, SEEDED AREAS, & LAWN AREAS MIN. 4 TIMES A WEEK DURING INITIAL ESTABLISHMENT PERIOD OF 6 MONTHS AFTER ALL LANDSCAPING IS INSTALLED.
21. PRIOR TO LAYING TOPSOIL, ALL SUBSOIL (BELOW PROPOSED TOPSOIL) TO BE TILLED TO A DEPTH OF AT LEAST 18" TO REMOVE CONSTRUCTION COMPACTION AND ALLOW FOR PROPER DRAINAGE OF TOPSOILS.
22. SEEDING OF DETENTION AREAS & OTHER SLOPE AREAS SHALL OCCUR IN THE DRY & AFTER SLOPES ARE COMPACTED. IT IS IMPORTANT, THAT THE DETENTION BASIN BE SEEDED AT THE BEGINNING OF THE PROJECT & PRIOR TO ANY DRAINAGE BEING DIRECTED TOWARDS THE BASIN. THE SEED AT DETENTION AREAS & OTHER SLOPED ARES WILL NEED A MIN. OF 6 MONTHS TO INITIALLY ESTABLISH PRIOR TO THE DETENTION BASIN BEING UTILIZED SO THAT THERE IS NOT EROSION & SLOPE FAILURE. MIX BOTH THE 2 SEED MIXES TOGETHER AT A RATIO OF 50/50 (NEW ENGLAND EROSION CONTROL/ RESTORATION MIX FOR DRY SITES) AND SPREAD AT A RATIO OF 1 LB PER 600 SQ. FT. SEED MIXES AVAILABLE FROM NEW ENGLAND WETLAND PLANTS, 820 WEST ST., AMHERST, MA, 413–548–8000. LIGHTLY RAKE SOIL TO ENSURE GOOD SEED–TO–SOIL CONTACT.

    ALL SEEDING TO BE COMPLETED "IN SEASON" BETWEEN APRIL 1 TO JUNE 15 OR AUGUST 15 TO OCTOBER 1, EXCEPT FOR RE–SEEDING OF BARE SPOTS. AT ALL SLOPED AREAS CONTRACTOR TO INSTALL COCONUT FIBER JUTE MESH NETTING ON ALL SLOPES 3:1 AND OVER, HYDROSEED ALL EXPOSED AREAS, ADD SOIL STABILIZER "FLUX TERRA HP–FGM SOIL STABILIZER" AS MANUFACTURED BY "PROFILE" TO HYDROSEED (AT RATE OF 3,000 LBS PER ACRE), AT NO ADDITIONAL COST TO THE OWNER. CONTRACTOR TO ALSO BE RESPONSIBLE FOR RE–GRADING AND RE–SEEDING ALL DISTURBED, ERODED, OR BARE SPOTS AT NO ADDITIONAL COST TO OWNER & UNTIL SLOPES ARE FULLY STABLE. CONTRACTOR RESPONSIBLE FOR ALL MAINTENANCE UNTIL FINAL ACCEPTANCE OF LAWN AREAS INCLUDING: WATERING, ADDING FERTILIZERS AND LIME AND MOWING AT NO ADDITIONAL COST TO OWNER.

    AFTER SEEDING, ALL AREAS TO BE LIGHTLY MULCHED WITH WEED FREE STRAW & CONTINUALLY WATERED EVERY DAY UNTIL SEED IS ESTABLISHED & APPROVED BY A&M LANDSCAPE ARCHITECT (USE NO HAY) SO THAT SEED IS KEPT MOIST. FOR SPREADING OF THE SEED WITH DRY DETENTION BASINS, WATER LEVELS MAY BE LOWERED IN THE DETENTION AREAS BY RELYING ON DRY SEASON AND OR DRY SPELLS; OR MAY BE ACCOMPLISHED THROUGH THE USE OF DEWATERING METHODS. CONTRACTOR SHALL SUBMIT SHOP DRAWINGS OF ANY DEWATERING METHODS FOR REVIEW AND APPROVAL PRIOR TO CONSTRUCTION. WATER FROM ANY DEWATERING OPERATION SHALL BE TREATED TO REDUCE TOTAL SUSPENDED SOLIDS AND BE IN COMPLIANCE WITH STATE AND FEDERAL STANDARDS.

    SPREAD THE NEW ENGLAND SEED MIXES AT AREAS SHOWN ON THE PLAN. SPREAD ALL MIXES AT A RATIO OF 1 LB PER 600 SQ. FT. SEED MIXES AVAILABLE FROM NEW ENGLAND WETLAND PLANTS, 820 WEST ST., AMHERST, MA, 413–548–8000. LIGHTLY RAKE SOIL TO ENSURE GOOD SEED–TO–SOIL CONTACT.

DIG SAFE

BEFORE YOU DIG
CALL 811 OR
1–888–DIG–SAFE
1–888–344–7233

LOAM AND SEEDING NOTES:

CONTRACTOR SHALL SEED ALL DISTURBED AREAS NOT NOTED TO RECEIVE OTHER MATERIALS, AND AT AREAS SHOWN ON THE PLAN PER SPECIFICATIONS BELOW

SCIENTIFIC NAME	COMMON NAME	PROPORTION	PERCENT BY WEIGHT PERCENT PURITY	GERMINATION
FESTUCA RUBRA 90% "RUBRA"	CREEPING RED FESCUE	37%	95%	
PAO PRAENTENSIS 90% "BARON"	BARON KENTUCKY BLUEGRASS	40%	85%	
LOLIUM PERENNE 90% "PALMER"	PALMER PERENNIAL RYEGRASS	15%	95%	
FESTUCA RUBRA 80% COMMUTATA WILMA	WILMA CHEWINGS	8%	95%	

1. SEED TO BE SPREAD AT MINIMUM RATE OF 5 LBS. PER 1000 SQ. FT.
2. SEEDING TO BE COMPLETED "IN SEASON" BETWEEN APRIL 1 TO JUNE 15 OR AUGUST 15 TO OCTOBER 1, EXCEPT FOR RESEEDING OF BARE SPOTS. IF UNABLE TO SEED WITHIN THESE TIMEFRAMES, CONTRACTOR TO INSTALL EROSION CONTROL MATS ON ALL SLOPES 3:1 AND OVER, HYDROSEED ALL EXPOSED AREAS, ADD SOIL STABILIZER "FLUX TERRA HP–FGM SOIL STABILIZER" AS MANUFACTURED BY "PROFILE" TO HYDROSEED (AT RATE OF 3,000 LBS PER ACRE), AT NO ADDITIONAL COST TO THE OWNER. CONTRACTOR TO COMPLETE ALL ABOVE "OUT OF SEASON" REQUIREMENTS AND THEN ALSO BE RESPONSIBLE FOR RE–GRADING AND RE–SEEDING ALL DISTURBED, ERODED, OR BARE SPOTS WITHIN NEXT CLOSEST PLANTING SEASON IN FALL OR SPRING AT NO ADDITIONAL COST TO OWNER. CONTRACTOR RESPONSIBLE FOR ALL MAINTENANCE UNTIL FINAL ACCEPTANCE OF LAWN AREAS INCLUDING: WATERING, ADDING FERTILIZERS AND LIME AND MOWING AT NO ADDITIONAL COST TO OWNER.
3. COMMERCIAL FERTILIZER SHALL BE APPLIED AT THE RATE OF 25 POUNDS PER 1000 SQ. FT. OR AS RECOMMENDED BY THE TESTING AGENCY. LIME TO BE SPREAD AT THE RATE OF 100 POUNDS PER 1000 SQ. FT OR AS RECOMMENDED BY THE TESTING AGENCY. COMMERCIAL FERTILIZER SHALL BE A COMPLETE FERTILIZER CONTAINING AT LEAST 50% OF THE NITROGEN OF WHICH IS DERIVED FROM NATURAL ORGANIZE SOURCES OF UREAFORM. IT SHALL CONTAIN THE FOLLOWING PERCENTAGES BY WEIGHT: NITROGEN (N) 10%, PHOSPHORUS (P) 6%, POTASH (K) 4%. LIME SHALL BE AN APPROVED AGRICULTURAL LIMESTONE CONTAINING NOT LESS THAN 85% OF TOTAL CARBONATES. LIMESTONE SHALL BE GROUND TO SUCH FINENESS THAT 50% WILL PASS A 100 MESH SIEVE AND 90% WILL PASS THROUGH A 20 MESH SIEVE.
4. LAWN AREAS TO BE SEEDED BY SOWING EVENLY WITH AN APPROVED MECHANICAL SEEDER AT THE RATE OF TEN POUNDS PER 1000 SQUARE FEET.
5. CONTRACTOR RESPONSIBLE FOR WATERING, MOWING, AND RESEEDING OF LAWN BARE SPOTS UNTIL A UNIFORM, HEALTHY STAND OF GRASS IS ESTABLISHED AND ACCEPTED.

LOAM AND SODDING NOTES

CONTRACTOR SHALL SOD AREAS NOTED ON THE PLANS.

SOD IS TO BE A BLEND OF FOUR TO FIVE CURRENT AND IMPROVED HYBRID BLUEGRASS AND FESCUE MIXES APPROPRIATE FOR BOTH SEMI–SHADED AND AREAS OF SUN.

HYBRIDS MAY INCLUDE: BLACKSTONE KENTUCKY BLUEGRASS, AWARD KENTUCKY BLUEGRASS, CHALLENGER KENTUCKY BLUEGRASS, BLACKBURG II KENTUCKY BLUEGRASS OR COMPARABLE AND EQUAL BLUEGRASS HYBRIDS.

1. SOD SHALL BE HIGH QUALITY, NURSERY GROWN ON CULTIVATED MINERAL AGRICULTURAL SOILS. SOD SHALL BE MOIST, AND MACHINE CUT AT A UNIFORM SOIL THICKNESS OF AT LEAST ⅝" AT TIME OF CUTTING. MEASUREMENT FOR THICKNESS SHALL INCLUDE TOP GROWTH AND THATCH. SOD SHALL BE FREE OF DISEASES, WEEDS, BARE SPOTS, OR INSECTS.
2. SODDING TO BE COMPLETED "IN SEASON" BETWEEN APRIL 1 TO JUNE 15 OR AUGUST 15 TO OCTOBER 1, EXCEPT FOR RE–SODDING OF BARE SPOTS. IF UNABLE TO SOD WITHIN THESE TIMEFRAMES, CONTRACTOR TO INSTALL EROSION CONTROL MATS ON ALL SLOPES 3:1 AND OVER, HYDROSEED ALL EXPOSED AREAS, ADD SOIL STABILIZER "FLUX TERRA HP–FGM SOIL STABILIZER" AS MANUFACTURED BY "PROFILE" TO HYDROSEED (AT RATE OF 3,000 LBS PER ACRE), AT NO ADDITIONAL COST TO THE OWNER. CONTRACTOR TO COMPLETE ALL ABOVE "OUT OF SEASON" REQUIREMENTS AND THEN ALSO BE RESPONSIBLE FOR RE–GRADING AND RE–SODDING ALL DISTURBED, ERODED, OR BARE SPOTS WITHIN NEXT CLOSEST PLANTING SEASON IN FALL OR SPRING AT NO ADDITIONAL COST TO OWNER. CONTRACTOR RESPONSIBLE FOR ALL MAINTENANCE UNTIL FINAL ACCEPTANCE OF LAWN AREAS INCLUDING: WATERING, ADDING FERTILIZERS AND LIME AND MOWING AT NO ADDITIONAL COST TO OWNER.
3. COMMERCIAL FERTILIZER SHALL BE APPLIED AT THE RATE OF 25 POUNDS PER 1000 SQ. FT. OR AS RECOMMENDED BY THE TESTING AGENCY. LIME TO BE SPREAD AT THE RATE OF 100 POUNDS PER 1000 SQ. FT OR AS RECOMMENDED BY THE TESTING AGENCY. COMMERCIAL FERTILIZER SHALL BE A COMPLETE FERTILIZER CONTAINING AT LEAST 50% OF THE NITROGEN OF WHICH IS DERIVED FROM NATURAL ORGANIZE SOURCES OF UREAFORM. IT SHALL CONTAIN THE FOLLOWING PERCENTAGES BY WEIGHT: NITROGEN (N) 10%, PHOSPHORUS (P) 6%, POTASH (K) 4%. LIME SHALL BE AN APPROVED AGRICULTURAL LIMESTONE CONTAINING NOT LESS THAN 85% OF TOTAL CARBONATES. LIMESTONE SHALL BE GROUND TO SUCH FINENESS THAT 50% WILL PASS A 100 MESH SIEVE AND 90% WILL PASS THROUGH A 20 MESH SIEVE.
4. CONTRACTOR RESPONSIBLE FOR WATERING, MOWING, AND RE–SODDING OF LAWN BARE SPOTS UNTIL A UNIFORM, HEALTHY STAND OF GRASS IS ESTABLISHED AND ACCEPTED.

PLANTING SCHEDULE-TREES, SHRUBS, GROUNDCOVERS & PERENNIALS

KEY	QUANTITY	BOTANICAL NAME	COMMON NAME	MIN. SIZE	SPACING	COMMENTS
DECIDUOUS/EVERGREEN TREES						
AC	14	ACER FREEMANII "ARMSTRONG"	ARMSTRONG FASTIGIATE "ARMSTRONG"	2.5"–3" CAL	AS SHOWN	B&B
AR	7	ACER RUBRUM	RED MAPLE	2.5"–3" CAL.	AS SHOWN	B&B
ARR	15	ACER RUBRUM "REDPOINTE"	REDPOINT RED MAPLE	2.5"–3" CAL	AS SHOWN	B&B
BF	27	ABIES BALSAMEA	BALSAM FIR	7'–8' HT.	AS SHOWN	B&B
BN	1	BETULA NIGRA "HERITAGE"	RIVER BIRCH	2.5"–3" CAL	AS SHOWN	B&B
CC	3	CHAMAECYPARIS OBTUSA "CONFUCIUS"	CONFUCIUS HINOKI FALSECYPRESS	6'–7' HT.	AS SHOWN	B&B
FP	8	FRAXINUS PENNSYLVANICA	GREEN ASH	2.5"–3" CAL.	AS SHOWN	B&B
GT	2	GLEDITSIA T. I. 'SKYLINE'	SKYLINE HONEYLOCUST	2.5"–3" CAL.	AS SHOWN	B&B
PG	12	PICEA GLAUCA	WHITE SPRUCE	7'–8' HT	AS SHOWN	B&B
PO	1	PICEA OMORIKA	SERBIAN SPRUCE	7'–8' HT.	AS SHOWN	B&B
PS	8	PINUS STROBUS	WHITE PINE	7'8' HT.	AS SHOWN	B&B
QP	12	QUERCUS PALUSTRIS	PIN OAK	2.5"–3" CAL.	AS SHOWN	B&B
SS	4	PINUS CEMBRA	SWISS STONE PINE	6'–7' HT.	ASS SHOWN	B&B
TC	14	TILIA CORDATA 'GREENSPIRE'	GREENSPIRE LITTLELEAF LINDEN	2.5"–3" CAL.	AS SHOWN	B&B
ZV	38	ZELKOVA "VILLAGE GREEN"	VILLAGE GREEN ZELKOVA	2.5"–3" CAL.	AS SHOWN	B&B
TO	69	THUJA OCCIDENTALIS "SMARAGD"	EMERALD GREEN ARBORVITAE	5–6' HT.	AS SHOWN	B&B
FLOWERING TREES						
CK	2	CORNUS KOUSA	KOUSA DOGWOOD	2.5–3" CAL.	AS SHOWN	B&B
MR	12	MALUS "ROYALTY"	ROYALTY FLOWERING CRAB	2"–2.5" CAL	AS SHOWN	B&B
SP	5	STEWARTIA PSEUDOCAMELLIA	JAPANESE STEWARTIA	2.5–3" CAL.	AS SHOWN	B&B
MZ	1	MALUS ZUMI 'CALOCARPA'	ZUMI CRABAPPLE	2.5–3" CAL.	AS SHOWN	B&B
SHRUBS						
KEY	QUANTITY	BOTANICAL NAME	COMMON NAME	MIN. SIZE	SPACING	COMMENTS
CA	35	CLETHRA ALNIFOLIA	SUMMERSWEET	24"–30" HT	AS SHOWN	POT
FS	5	FORSYTHIA 'SHOW OFF'	SHOW OFF FORSYTHIA	24"–36" HT	AS SHOWN	POT
GW	67	RHODODENDRON "GUMBO WHITE"	GUMBO WHITE RHODODENDRON	#3	AS SHOWN	POT
HA	28	HYDRANGEA ARBORESCENS "WHITE DOME"	DARDOM HYDRANGEA	24"–30" HT.	AS SHOWN	B&B
HS	10	HIBISCUS SYRIACUS 'RED HEART'	RED HEART ROSE OF SHARON	4–5' HT.	AS SHOWN	B&B
IG	7	ILEX GLABRA "DENSA"	INKBERRY	2'–2.5' HT.	AS SHOWN	B&B
JC	18	JUNIPERUS 'CHINENSIS "SEAGREEN"	CHINESE JUNIPER	#3	AS SHOWN	POT
JH	6	JUNIPERUS HORIZ. "PLUMOSA COMP. YOUNGSTOWN	YOUNGSTOWN JUNIPER	#3	AS SHOWN	POT
KJ	14	KERRIA JAPANICA "GOLDEN GUINEA"	JAPANESE KERRIA	24"–3" HT.	AS SHOWN	POT
MP	10	MYRICA PENNSYLVANICA	NORTHERN BAYBERRY	2.5–3'	AS SHOWN	B&B
POD	2	PHYSOCARPUS OPULIFOLIUS	DART'S GOLD	24"–30" HT.	AS SHOWN	
RC	21	RHODODENDRON "CHECKMATE"	PJM CHECKMATE RHODY.	30"–36" HT.	AS SHOWN	POT
RP	32	ROSA "DRIFT PINK"	PINK DRIFT ROSE	#3	AS SHOWN	POT
RS	6	RHODODENDRON "SCINTILLATION"	SCINTILLATION RHODY.	#5	AS SHOWN	
SB	5	SPIRAEA X BUMALDA	ANTHONY WATERER SPIRAEA	#3	AS SHOWN	
TM	26	TAXUS X MEDIA "DENSIFORMIS"	DENSE SPREADING YEW	#5	AS SHOWN	POT
VT	6	VIBURNUM TRILOBUM COMPACTA	NORTHERN BAYBERRY	24"–30" HT.	AS SHOWN	B&B
PERENNIALS/GRASSES						
KEY	QUANTITY	BOTANICAL NAME	COMMON NAME	MIN. SIZE	SPACING	COMMENTS
AB	16	ASTILLBE X ROSEA	ASTILLBE "PEACH BLOSSOM"	#2	24" O.C.	STAGGERED
AF	16	ASTILLBE X ARENDSII FANAL	FANAL ASTILBE	#2	24" O.C.	STAGGERED
AJ	32	ASTILBE JAPONICA "DEUTSCHLAND"	DEUTSCHLAND ASTILBE	#2	24" O.C.	STAGGERED
AT	63	ALLIUM 'TANGUTICUM :SUMMER BEAUTY"	ORNAMENTAL CHIVES	#2	24" O.C.	STAGGERED
CF	39	CALMAGROSTIS X ACUTIFLORA	KARL FOERSTER FEATHER REED GRASS	#3	AS SHOWN	POT
EP	68	ECHINACEA PURPUREA	BUTTERFLY KISSES CONEFLOWER	#2	24" O.C.	STAGGERED
HH	83	HEMEROCALLIS	HAPPY RETURNS DAYLILLY	#2	24" O.C.	STAGGERED
HR	61	HEMEROCALLIS	ROSY RETURNS	#2	24" O.C.	STAGGERED
LS	39	LEUCANTHEMUM X SUPERBUM	"BECKY" SHAST DAISY	#2	24" O.C.	STAGGERED
PH	25	PENNISETUM A. 'HAMELN'	DWARF FOUNTAIN GRASS	#2	AS SHOWN	POT
RF	71	RUDBECKIA FULGIDA "CITY GARDEN"	CONEFLOWER	#2	24" O.C.	STAGGERED

M:\PROJECTS\2518–01\CIVIL\DRAWINGS\CURRENT\C–2518–01_LANDSCAPING.DWG

APPROVED BY
TOWN OF ROCHESTER PLANNING BOARD

DATE SUBMITTED: _____

DATE ENDORSED: _____

DATE APPROVED: _____

_____

_____

_____

_____

_____

_____

TOWN OF ROCHESTER PLANNING BOARD

ISSUED FOR REVIEW
10-25-2019 REV. 6:12-01-2020

COMMONWEALTH OF MASSACHUSETTS
PHILIP L. CORDEIRO
CIVIL
NO. 47083
REGISTERED
PROFESSIONAL ENGINEER

Philip L Cordeiro
c=US, o=Allen and Major Associates Inc., ou=A01410C0000017597888F4FD00002012, cn=Philip L Cordeiro
2021.01.26 14:35:59 -05'00'

PROFESSIONAL ENGINEER FOR
ALLEN & MAJOR ASSOCIATES, INC.

REV	DATE	DESCRIPTION
6	12-01-2020	PER PLANNING BOARD PEER REVIEW COMMENTS
5	10-23-2020	PER PLANNING BOARD PEER REVIEW COMMENTS
4	10-02-2020	PER PLANNING BOARD PEER REVIEW COMMENTS
3	07-31-2020	PER PLANNING BOARD PEER REVIEW COMMENTS
2	07-09-2020	PER NOI PEER REVIEW COMMENTS
1	05-18-2020	PER NOI PEER REVIEW COMMENTS

APPLICANT\OWNER:

STEEN
REALTY AND DEVELOPMENT CORPORATION
3 LEDGEWOOD BOULEVARD DARTMOUTH, MA 02747

PROJECT:

ROCHESTER CROSSROADS
SMART GROWTH DEVELOPMENT
CRANBERRY HIGHWAY
ROCHESTER, MA

PROJECT NO.	2518-01	DATE:	10-25-2019
SCALE:		DWG. NAME:	C2518-01_
DESIGNED BY:	PGM/CMcC	CHECKED BY:	PC

PREPARED BY:

ALLEN & MAJOR ASSOCIATES, INC.
civil engineering ◆ land surveying
environmental consulting ◆ landscape architecture
www.allenmajor.com
10 MAIN STREET
LAKEVILLE MA 02347
TEL: (508) 923-1010
FAX: (508) 923-6309

WOBURN, MA ◆ LAKEVILLE, MA ◆ MANCHESTER, NH

THIS DRAWING HAS BEEN PREPARED IN DIGITAL FORMAT. CLIENT/CLIENT'S REPRESENTATIVE OR CONSULTANTS MAY BE PROVIDED COPIES OF DRAWINGS AND SPECIFICATIONS FOR HIS/HER INFORMATION AND/OR SPECIFIC USE ON THIS PROJECT. DUE TO THE POTENTIAL THAT THE PROVIDED INFORMATION MAY BE MODIFIED UNINTENTIONALLY OR OTHERWISE, ALLEN & MAJOR ASSOCIATES, INC. MAY REMOVE ALL INDICATION OF THE DOCUMENT'S AUTHORSHIP ON THE DIGITAL MEDIA. PRINTED REPRESENTATIONS OR PORTABLE DOCUMENT FORMAT OF THE DRAWINGS AND SPECIFICATIONS ISSUED SHALL BE THE ONLY RECORD COPIES OF ALLEN & MAJOR ASSOCIATES, INC.'S WORK PRODUCT.

DRAWING TITLE: LANDSCAPING PLAN

SHEET No. L-105

Copyright©2020 Allen & Major Associates, Inc.
All Rights Reserved

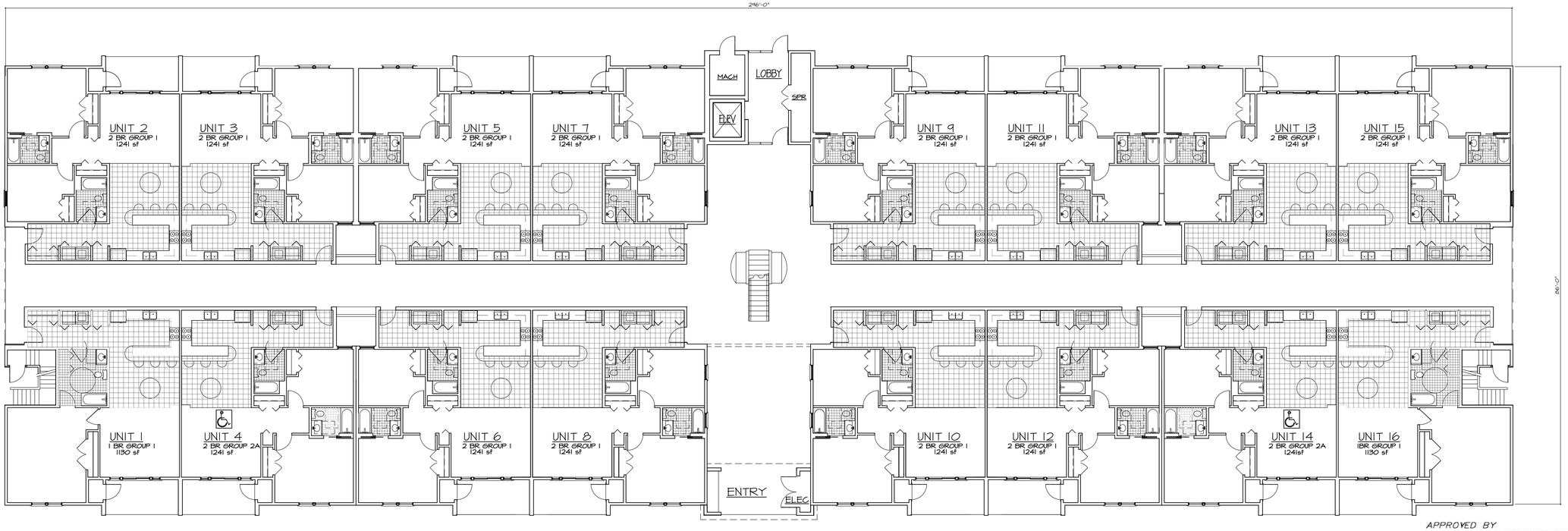

APPROVED BY
TOWN OF ROCHESTER PLANNING BOARD

DATE SUBMITTED: _____

DATE ENDORSED: _____

DATE APPROVED: _____

TOWN OF ROCHESTER PLANNING BOARD

PROPOSED FIRST FLOOR PLAN (Building Type A&C)

SCALE: 3/32" = 1'-0"

PROPOSED FRONT ELEVATION (Building Type A&C)

SCALE: NTS

December 02, 2020

ISSUES / REVISIONS

PRELIMINARY DESIGN
12-02-2020

© 2018 JG ARCHITECTURE. ALL RIGHTS RESERVED. THESE PLANS HEREIN ARE THE PROPERTY OF JG ARCHITECTURE, AND ARE PROTECTED UNDER APPLICABLE COPYRIGHT LAWS.

STEEN
QUALITY AND DEVELOPMENT CORPORATION
200 WINTER STREET
HOLLISTON, MA 01746
508.380.3105

PRELIMINARY DESIGN

ROCHESTER CROSSROADS

CRANBERRY HIGHWAY
ROCHESTER, MASSACHUSETTS

JG ARCHITECTURE
200 WINTER STREET
HOLLISTON, MA 01746
508.380.3105
email: jgarchitecture88@gmail.com
website: JGA-Architecture.com

PROPOSED PLAN AND ELEVATION

ISSUE DATE:
13 JULY 2018

JGA JOB NUMBER 18-126

SHEET NUMBER A-1

APPROVED BY
TOWN OF ROCHESTER PLANNING BOARD

DATE SUBMITTED: _____

DATE ENDORSED: _____

DATE APPROVED: _____

TOWN OF ROCHESTER PLANNING BOARD

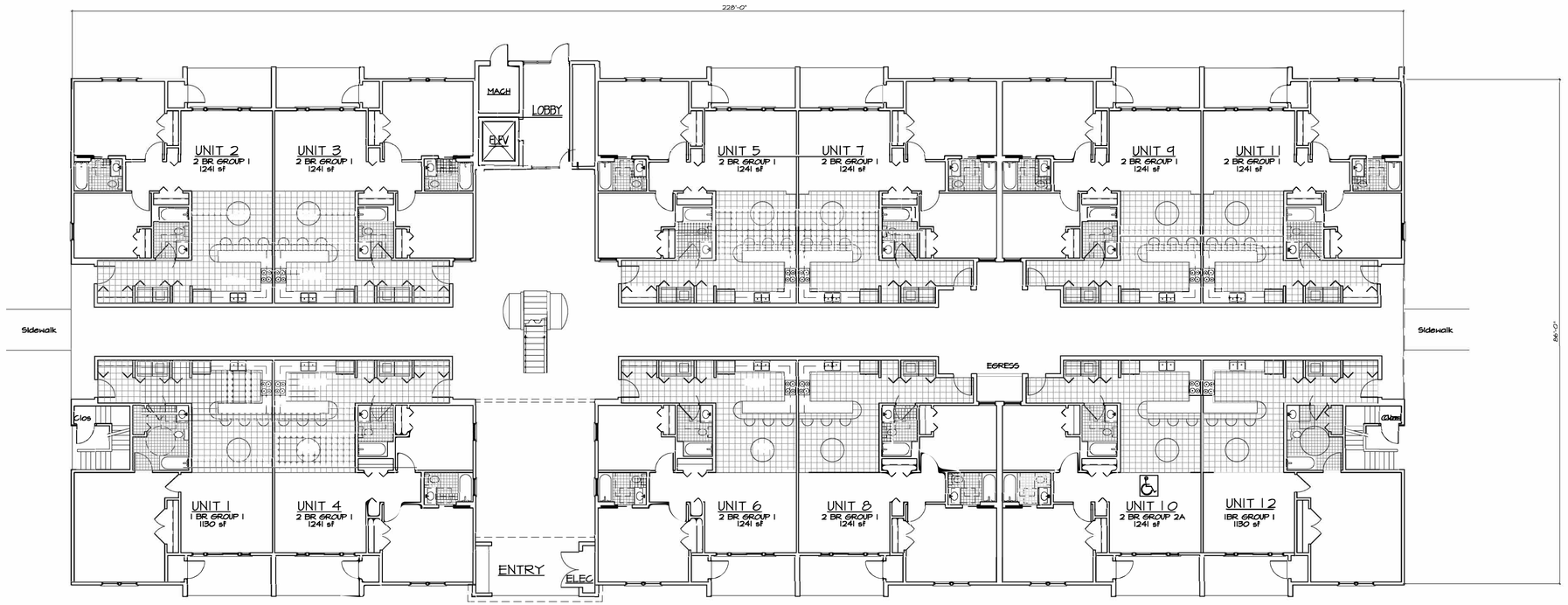

PROPOSED FIRST FLOOR PLAN (Building Type D)

SCALE: 3/32" = 1'-0"

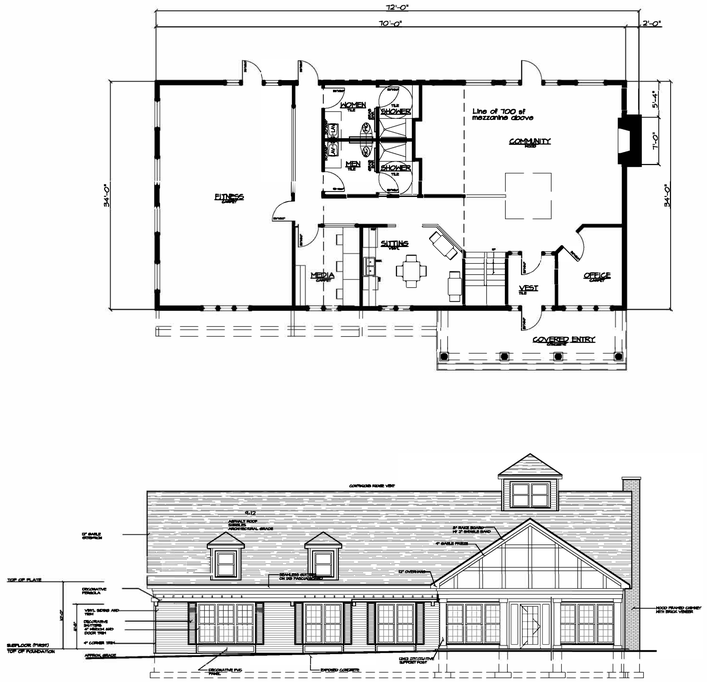

PROPOSED FLOOR PLAN/ELEVATION (Community Building)

SCALE: NTS

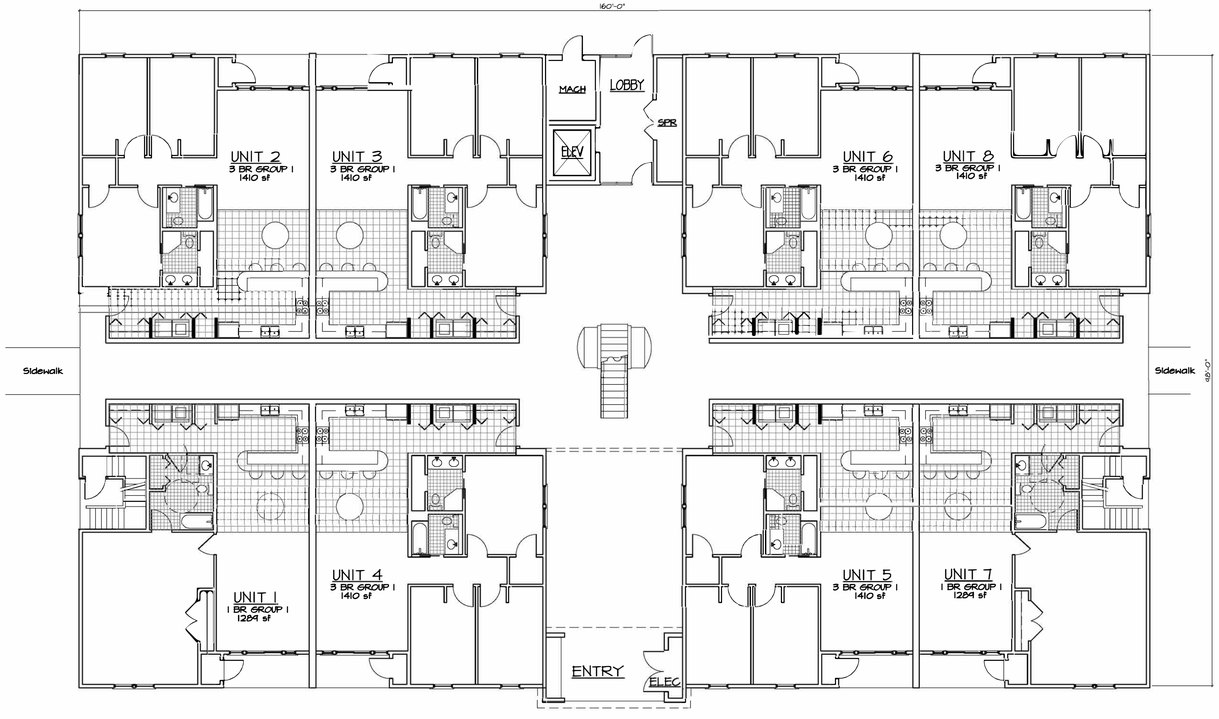

PROPOSED FIRST FLOOR PLAN (Building Type B)

SCALE: NTS

NOTE: 2nd, 3rd, and 4th Floor Units Above Unit 2 are 2-Bedroom Units Only

December 02, 2020

ISSUES / REVISIONS

PRELIMINARY DESIGN 12-02-2020

© 2018 JG ARCHITECTURE, ALL RIGHTS RESERVED. THESE PLANS HEREIN ARE THE PROPERTY OF JG ARCHITECTURE, AND ARE PROTECTED UNDER APPLICABLE COPYRIGHT LAWS.

STEEN
REALTY AND DEVELOPMENT CORPORATION
200 WINTER STREET
HOLLISTON, MA 01746
508.380.3105

PRELIMINARY DESIGN

ROCHESTER CROSSROADS

CRANBERRY H GHWAY
ROCHESTER, MASSACHUSETTS

JG ARCHITECTURE
200 WINTER STREET
HOLLISTON, MA 01746
508.380.3105
email: jgarchitecture88@gmail.com
website: JGA-Architecture.com

PROPOSED PLAN AND ELEVATION

ISSUE DATE:
13 JULY 2018

JGA JOB NUMBER 18-126

SHEET NUMBER A2